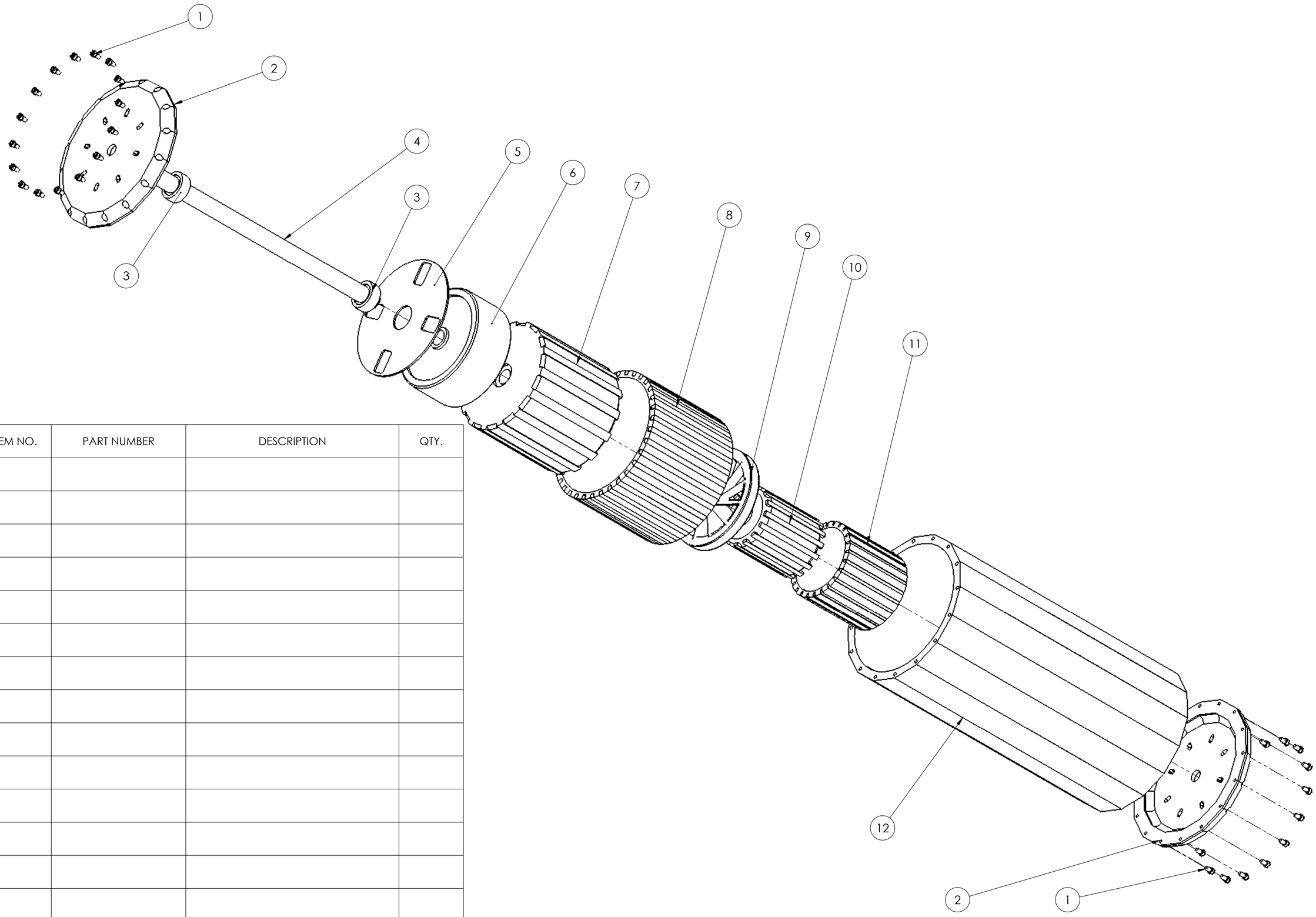

ITEM NO.	PART NUMBER	DESCRIPTION	QTY.