2012 IEEE International Conference on Power Electronics, Drives and Energy Systems
December16-19, 2012, Bengaluru, India

Analysis and Modeling of Digital Peak Current Mode Control

Suryanarayana K
Department of Electrical and Electronics Engineering
NMAM Institute of Technology
Karkala, India
suryanarayana@nitte.edu.in

L.V. Prabhu, Anantha S
Technical Director
HEXMOTO Controls Pvt. Ltd.
Mysore, India
prabhu@hexmoto.com
ananthsaligram@hexmoto.com

Vishwas K
Design Engineer
HEXMOTO Controls Pvt. Ltd
Mysore, India
vishwas@hexmoto.com

***Abstract*—This paper presents analysis of peak current mode control for a buck converter operating in continuous conduction mode. The current feedback loop with slope compensation is analyzed. The mathematical modeling with control to output transfer function and stability analysis of the converter based on this transfer function is also presented. The digital implementation of peak current mode control with feedback compensation is described. Simulation results and experimental observations are shown for a buck converter with peak current mode control operating with 100V input voltage and 0-95V, 100A output.**

Keywords- Slope compensation, peak current mode control, two pole two zero compensator, sub harmonic oscillations.

I. INTRODUCTION

Among the existing DC-DC converter topologies, the buck converter is the most widely used. It finds its importance in processor voltage regulation and power management applications which require good transient response over a wide load current range. Among the available topologies for controlling buck converter, current mode control is the industrial standard method. Compared to voltage mode control, it features inherent current sharing, good dynamic response and input voltage independent control loop.

Average current mode and peak current mode control are the choices available under current mode control. In average current mode, the average inductor current is controlled. In peak current mode, the power switch is turned ON by a fixed frequency clock and turned OFF when inductor current reaches a threshold defined by outer voltage loop. With the advantage of cycle by cycle current limit and good current sharing, peak current mode control is the widely-used current mode control technique. However peak current mode control in continuous conduction mode suffers from the problem of sub harmonic oscillations when operated at duty cycle greater than 50%. The solution to this is providing slope compensation.

For analysis of current mode control, many models were developed in the past as in [1] and [6]. Most of the models were accurate up to half the switching frequency. Few discrete time models could accurately predict sub harmonic oscillations and influence of slope compensation. But these models were too complex for practical design. Among the earlier models, Ridley's model was the most accurate for design.

With the availability of processors with on chip analog to digital converters, digital to analog converters, comparators and other features, peak current mode control with a digital control offers many benefits. Due to Increased computing capability and reduced cost, DSP based digital control has become increasingly viable in power converter applications. Digital control helps in implementing sophisticated, non-linear control methods to improve static and dynamic performance. It decreases the number of active and passive components thereby improving reliability. With digital control, any improvements or modifications can be incorporated with ease by the means of software.

This paper presents the analysis of peak current mode control for buck converter and digital implementation of the same. Section II and III describes the basics of buck converter and voltage mode control respectively. Analysis of peak current mode control along with mathematical model and transfer functions is done in section IV. Section V presents the digital implementation of peak current mode control with slope compensation and feedback compensation. Simulation results and experimental observations are shown in section VI.

II. BASIC BUCK CONVERTER

As a simplest form of DC-DC converter, a buck converter steps down input voltage to give the required lower average DC output voltage. It provides a non-isolated switched mode DC-DC conversion.

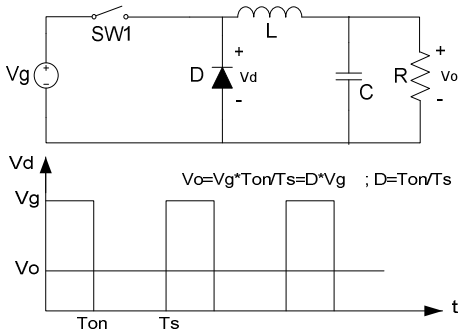

Figure 1. Basic Buck Converter

978-1-4673-1508-8/12/$31.00 ©2012 IEEE

Authorized licensed use limited to: IIT Madras. Downloaded from IEEE Xplore. Restrictions apply.

The most basic buck converter without any feedback is shown in Fig. 1. The DC input voltage V_g is switched at some repetitive rate T_S. The resultant chopped voltage V_d is applied to an output low pass filter having an inductor L and capacitor C. The average voltage V_o appears across the load. The filter averages the chopped DC to establish an output DC voltage lower than the input value. Hence the output voltage is given by

$$V_0 = \left(\frac{T_{on}}{T_s}\right) V_g = DV_g. \quad (1)$$

Where T_{on} is the switch on-time, Ts is the switching period and D is the duty cycle of the switch. Regulation of the output voltage level is obtained by controlling the duty cycle D.

III. Voltage Mode Control

Voltage mode control or single loop control uses a constant frequency clock to turn ON the switch of the PWM circuit. A sawtooth ramp of slope S_e and a control voltage controls the turn OFF of the switch as in Fig. 2. The sawtooth ramp is reset to zero at the end of every switching cycle. In the analysis of voltage mode control, the control voltage Vc is assumed to be a pure DC voltage. But if Vc contains excessive ripple (apart from required DC component), due to error amplifier gain at switching frequency, then those frequency components can mix with the sawtooth frequency components causing the regulator to exhibit large-signal switching instability. This can cause the regulator to produce even more ripple at a sub-harmonic of the switching frequency although it may still regulate at proper output voltage.

Voltage mode control suffers from disadvantages like input voltage dependent gain and slow response to input voltage variations etc. A voltage mode controller cannot, by itself, correct any changes in the input until they are detected at the output. However feed forward control helps to reduce the effect of input voltage imperfections on the output voltage. With a feed forward control, the system will respond to disturbances before they can affect the system. But the more responsive the control network is, the greater is the risk of instability. Also since there is no current feedback involved, the voltage mode converter has no inherent short circuit protection. Hence additional circuitry is required for detection and protection of the converter from short circuit.

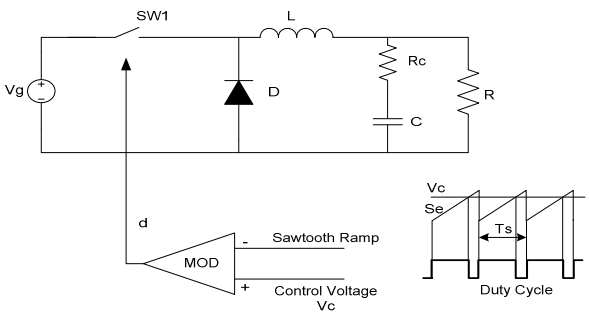

Figure 2. Voltage Mode Control

IV. Current Mode Control

The Current mode control features a dual loop control circuit; a voltage loop and a current loop within a voltage loop. This control circuit controls the PWM operation in response to a measured inductor current and output voltage. There are different schemes for current mode control as in [1]. These schemes differ in the current sensing techniques used but result in the same effect. The current signal with rising slope of S_n and falling slope of S_f is summed with an external ramp of slope S_e and the result is compared with a control signal V_C to generate duty cycle D to the power switch. The basic structure of Current Mode Control can be described as in Fig. 3.

Different modulation techniques can be used when the inductor current is sensed. Using a constant frequency clock of switching period T_S to turn ON the power switch and using the intersection of current signal and external ramp with the control voltage signal to turn OFF the switch is the most commonly used approach. This is also referred as constant frequency trailing edge modulation.

Current mode control is also classified into average current mode and peak current mode. In the average mode control, the average inductor current is controlled. In peak current mode, the power switch is turned ON by a constant frequency clock and is turned OFF when the inductor current reaches a threshold defined by the control voltage. Peak current mode control is the most commonly used control method.

A. *Peak Current Mode Control*

Peak current mode is the widely-used current mode control technique, where the duty cycle is terminated when the inductor current reaches a threshold level defined by the outer voltage loop. This technique features some inherent advantages such as simple cycle-by cycle current limiting and good current sharing of paralleled converters. However, peak current mode suffers from the problem of sub-harmonic oscillations when operated at duty cycle greater than 50% which needs addition of external ramp. The control technique is shown in Fig. 4

B. *Sub Harmonic Oscillations*

In a peak current mode controlled converter operating in continuous conduction Mode, the inductor current shows a transition to sub harmonic oscillations depending on operating condition in the absence of external ramp. Any perturbations in the inductor current or control voltage causes the perturbation to either persist or damp out depending upon the operating condition

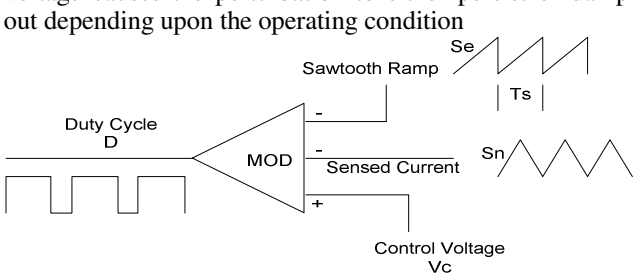

Figure 3. Current Mode Control- Basic Structure

Authorized licensed use limited to: Intel Corporation via the Virtual Library. Downloaded on November 14,2023 at 11:21:27 UTC from IEEE Xplore. Restrictions apply.

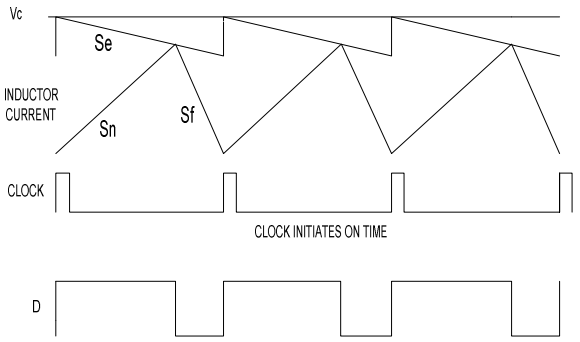

Figure 4. Peak Current Mode Control.

The inductor current response to a perturbation is shown in Fig. 5. The inductor current has raising slope of S_n and falling slope of S_f. T_{on} and T_{off} are the ON and OFF times for steady state converter operation whereas T_{1d} and T_{2d} are for the perturbed state. A perturbation of value Δi_0 at the instant of turn on causes a deviation of Δi_1 at end of the period and is calculated to be

$$\Delta i_1 = -\frac{S_f}{S_n}\,\Delta i_0. \qquad (2)$$

From (1), for $S_f<S_n$ (duty cycle<50%), the perturbed current settles down in a next few cycles as in Fig. 6. For $S_n<S_f$ (duty cycle>50%), the perturbation grows with every switching cycle as in Fig. 7. This describes the instability occurring in the buck converter which is operating at a duty cycle greater than or equal to 50% under current mode control.

C. Slope Compensation

The perturbations in inductor current in peak current mode controlled converters operating at duty cycles greater than or equal to 50% are to be damped by adding a compensation ramp or external ramp to the control voltage. The added external ramp has a slope S_e as in Fig. 4. With compensation ramp applied to the converter, the perturbed current at the end of n cycles as in [2] is given by

$$\Delta i_n = -\left(\frac{S_f - S_e}{S_n + S_e}\right)^n \Delta i_0 \qquad (3)$$

Hence it follows that for the current loop to be stable, the perturbations should be damped out and the magnitude of the term $(S_f - S_e)/(S_n + S_e)$ should be less than unity. Hence the slope of required compensation ramp will be

$$S_e > \frac{S_f - S_n}{2} \qquad (4)$$

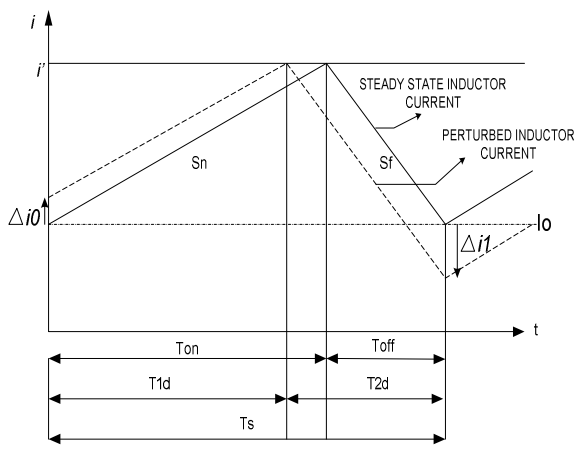

Figure 5. Perturbed and Steady State Inductor Current

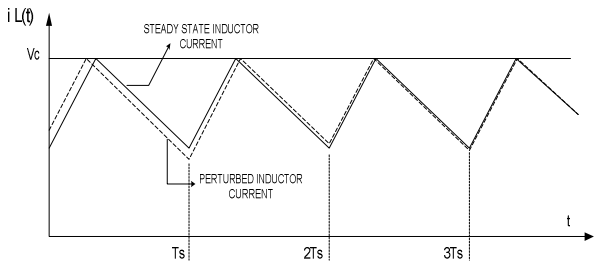

Figure 6. Perturbed Inductor Current for D<50%

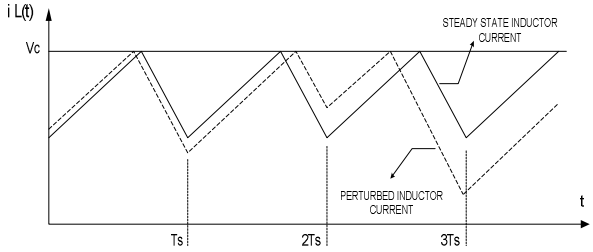

Figure 7. Perturbed Inductor Current for D>50%

D. Peak Current Mode Control Model

Average models were used for converter analysis as in [1] and [6]. Many other models later used the concept of average models. Other models varied in terms of modulator gain. However these models were accurate up to half the switching frequency. In order to extend the validation of the averaged models to the high-frequency range, several modified average models are proposed based on the results of discrete-time analysis and sample-data analysis. The modified average model provided by Ridely is more accurate one. It provides both the accuracy of the sample-data model and the simplicity of the three-terminal switch model. In this method, first, the control-to-inductor current transfer function is obtained by transferring the accurate discrete-time transfer function into its continuous-time form. Then, sample and hold effects are equivalently represented by a transfer function which is inserted into the feedback path of the inductor current. However most of these models failed to prove the performance predictions which were practically observed and few of them turned out very complex to be used. Thus a model to accurately determine the converter behavior was required.

For the new model, the structure used when studying the response of an open-loop single-phase buck converter with a perturbation at the control voltage, V_C is shown in Fig. 8. When studying the performance at a certain frequency, the perturbation is assumed to be sinusoidal for simplicity. In the inner current loop, when there is a perturbation at frequency fm in the control signal, multiple frequency components are generated at the output of the PWM comparator, including the fundamental component f_m, the switching frequency component f_S and its harmonic nf_S.

All components are coupled through the modulator. The primary components f_m and f_S-f_m are taken into consideration in voltage-mode control. The situation is much more complicated in current mode control as in [6], because neither the sideband components nor the switching frequency components can be ignored. Previous average models for current-mode control failed to consider high

Authorized licensed use limited to: Intel Corporation via the Virtual Library. Downloaded on November 14,2023 at 11:21:27 UTC from IEEE Xplore. Restrictions apply.

frequency components. That's why they can only predict the low-frequency response.

The concept of describing function (DF) is used for the new modeling approach. In the describing function, the non-linear element has a sinusoidal input. Output of the non-linear element can thus be represented as a Fourier series with fundamental component and harmonics. The system is assumed to have low pass characteristics and so most of the harmonics are filtered out and only fundamental component remains. Thus a sine output is obtained. So the linearity can now be replaced by a describing function for which all frequency domain techniques are applicable.

For analysis with DF method, a small sinusoidal perturbation at a frequency f_m is injected through the control signal V_c. The perturbed duty cycle expression is found out based on the waveform. Then Fourier analysis is applied to calculate the perturbation frequency component of duty cycle and then describing function from control signal to duty cycle is obtained. The output is same as duty cycle but magnified by input voltage. Hence describing function from control signal to output is obtained. The components at harmonic frequencies are ignored due to existence of a low pass filter. The results are found under the assumptions that

- The magnitude of the inductor-current slopes during the on-period and the off period stays constant
- The magnitude of the perturbation signal is very small
- The perturbation frequency f_m and the switching frequency f_s are commensurable.

Consider a buck converter with parameters: input voltage-V_g, output voltage-V_O, filter inductor-L, filter capacitance-C, capacitor ESR-R_C, duty cycle-$D=V_O/V_g$, D'=1-D, Switching Period-T_S and current sense feedback resistance R_i. Then for the new model, the control to output transfer function as in [1][4] and [5] is defined by the product of three terms: a DC gain term H_{dc}, a power stage small signal model $F_P(s)$ and a high frequency transfer function $F_H(s)$ and is given by

$$\frac{V_o(s)}{V_c(s)} = H_{dc}F_p(s)F_h(s) \tag{5}$$

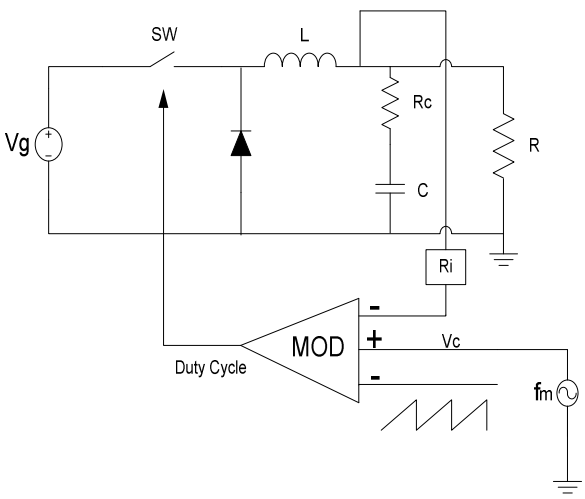

Figure 8. Modeling Methodology for Peak Current Mode Control

$$H_{dc} = \frac{R}{R_i}\frac{1}{1+\frac{RT_s(m_cD'-0.5)}{L}}. \tag{6}$$

$$F_p(s) = \frac{1+sCR_c}{1+\frac{s}{\omega_p}}. \tag{7}$$

$$F_h(s) = \frac{1}{1+\frac{s}{\omega_n Q_p}+\frac{s^2}{\omega_n^2}}. \tag{8}$$

The pole ωp is formed from output capacitance and load resistance and is given by

$$\omega_p = \frac{1}{CR} + \frac{T_s(m_cD'-0.5)}{LC} \tag{9}$$

The high frequency transfer function $F_H(s)$ It gives a double pole at half the switching frequency ωn. The LC-filter resonance is eliminated with current feedback. The damping Qp of this pole pair depends on the duty cycle and added external compensation factor (m_c).

$$\omega_n = \frac{\pi}{T_s} \tag{10}$$

$$Q_p = \frac{1}{\pi(m_cD'-0.5)} \tag{11}$$

$$m_c = 1 + \frac{S_e}{S_n} \tag{12}$$

With no external ramp, the poles at half the switching frequency are all always complex. At D=0, Q_P has a value of 2/π. As the duty cycle is increased, poles start to move towards the imaginary axis and at D=0.5, Qp becomes infinity with the poles becoming purely imaginary. When duty cycle is increased further, the poles move to the right hand side of the s plane. A high peaking is observed when there is no compensation ramp added and the duty cycle is close to 50%. With the addition of external ramp, the complex poles get damped quickly and the system instability occurring at half the switching frequency is eliminated.

For a fixed duty cycle, with the addition of external ramp to the system, the poles move closer to the real axis and split into two real poles. One of these moves out to higher frequency. The other moves towards the resonant frequency of the power stage. With sufficient ramp added to the system, this pole combines with the pole of the power stage giving the resonant frequency characteristics of voltage mode control. This provides the limiting case of the compensation ramp factor m_c or the external ramp to be added.

This current mode model provides a simple design procedure to determine stable converter operating conditions. These conditions can be obtained from control to output transfer function (and the methodology holds good for other converter topologies too). The external ramp should be selected so that the compensation ramp factor corresponds to the damping Q_p=1 which prevents peaking at half the switching frequency. Too much of ramp will have effect on the transient behavior of the converter. The required external ramp for stable buck converter based on (11) is given by

$$m_c = \frac{\frac{1}{\pi}+0.5}{D'} \tag{13}$$

Authorized licensed use limited to: Intel Corporation via the Virtual Library. Downloaded on November 14,2023 at 11:21:27 UTC from IEEE Xplore. Restrictions apply.

E. *Feedback Compensator for Peak Current Mode Control*

In current mode control, the LC-filter resonance is eliminated with current feedback and there is less phase delay in the power stage transfer function and compensation is easier. The system characteristic is a first order at low frequencies and with sub harmonic double pole at half the switching frequency. A type II compensator is used for current mode feedback compensation. The complete buck converter system is obtained after integrating the feedback compensator with the peak current mode model. The poles and zeros of the compensator are placed according to the analysis of the control-to-output transfer function in order to set the desired crossover frequency and phase margin of the closed loop system.

The compensator has one zero and two poles. One pole is set to the ESR zero of control to output transfer function to approximately cancel out its effects. The second pole is placed at origin to form an integrator. This pole also determines compensator gain. The zero is set to achieve a suitable phase margin. The frequency of this zero is set to $1/5^{th}$ of desired crossover frequency. The crossover frequency should be less than $1/10^{th}$ of the switching frequency. The compensator transfer function is given by.

$$H_c(s) = \frac{\frac{\omega_{p1}}{s}\left(1+\frac{s}{\omega_z}\right)}{1+\frac{s}{\omega_{p1}}} \qquad (14)$$

where $\omega_Z = \frac{2\pi f_C}{5}$;

$$\omega_{p2} = \frac{1}{CR_C};$$

$$\omega_{p1} = \frac{1.23\, fcR_iR_1R_2\,(L+0.32RT_s)}{LR}$$

$$R_1 = \sqrt{1 - 4{f_c}^2{T_s}^2 + 16{f_c}^4{T_s}^4}\ ;$$

$$R_2 = \sqrt{1 + \frac{39.48C^2{f_c}^2L^2R^2}{(L+0.32RT_s)^2}}$$

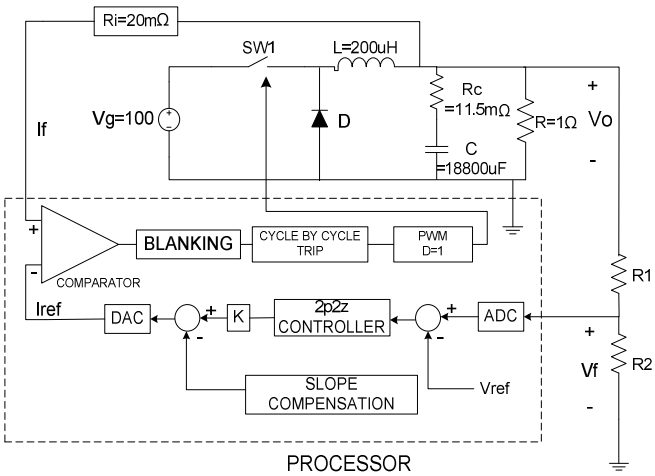

Figure 9. Digital Peak Current Mode Control

V. DIGITAL PEAK CURRENT MODE CONTROL

A digital implementation of peak current mode control is shown in Fig 9**.** The output voltage (V_O) is applied to a potential divider network to get the feedback voltage (V_f). It is connected to processor's ADC and a digital value is obtained. A digital reference (V_{ref}) is subtracted from the digital value and the resulting error value is fed to the digital two pole two zero (2p2z) controller. The 2p2z output is multiplied by gain K and fed to the DAC and an analog current reference (I_{ref}) is obtained. This gain scales the output of the controller to a digital value that is suitable for use with the DAC of the comparator module, counteracting the effects of the various gains within the closed loop system. I_{ref} is compared with the inductor current feedback (I_f) obtained from a current transformer which has a gain R_i. The output of the comparator will change state when the inductor current reaches the level of the voltage on the DAC output causing switch to turn OFF.

For implementing the 2p2z compensator, the transfer function obtained in time domain has to be converted to digital domain. This is done by applying bilinear transformation with sampling period equal to converter switching period. The resulting discrete function is of the form

$$H_C(z) = \frac{Y(z)}{X(z)} = \frac{B_2\, z^{-2}+B_1\, z^{-1}+B_0}{-A_2\, z^{-2}-A_1 z^{-1}+1}$$

(15)

This can now be rearranged to find the linear difference equation of the form

$$y[n] = B_2\, x[n-2] + B_1\, x[n-1] + B_0\, x[n] + A_2\, y[n-2] + A_1\, y[n-1] \qquad (16)$$

For the feedback compensator designed, x[n] is the error input to the controller in the present sampling period, y[n] is the controller output for present sampling period. The subscripts [n-1] and [n-2] denote the parameters for previous sampling and two sampling periods in the past respectively. This equation is implemented in the processor replacing the analog compensator. The location on poles and zeros of the 2p2z compensator will determine the system transient response.

VI. PRACTICAL IMPLIMENTATION AND OBSERVATIONS

The digital peak current mode control was implemented on a buck converter with the following specifications

Input Voltage V_g=100V
Output Voltage V_O=60V
Load R=1Ω
Filter Inductor L=200µH
Filter Capacitor C=18800µF and its ESR R_C=11.5mΩ
Current Feedback Gain R_i=24mΩ
Switching Period T_S=100µs

The inductor current and PWM output observed (without and with slope compensation) are shown in Fig. 10 and Fig**.** 11 Frequency response of plant, controller and the entire system are shown in Fig. 12 and Fig. 13.

Authorized licensed use limited to: Intel Corporation via the Virtual Library. Downloaded on November 14,2023 at 11:21:27 UTC from IEEE Xplore. Restrictions apply.

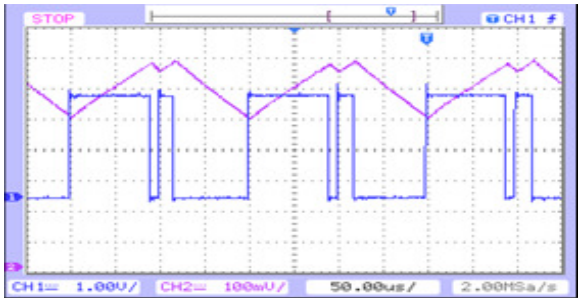

Figure 10. Inductor Current and PWM Pulses without Slope Compensation

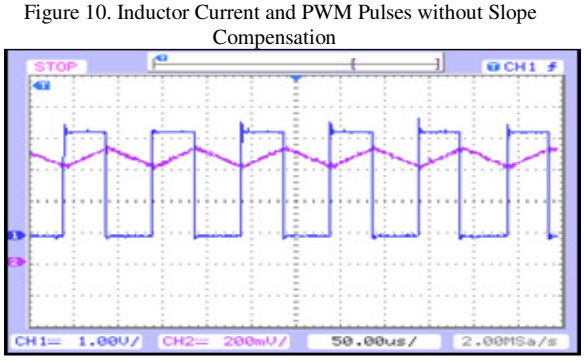

Figure **11**. Inductor Current and PWM Pulses with Slope Compensation

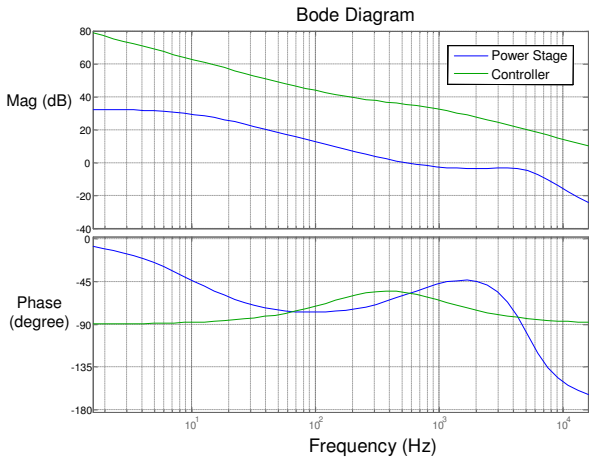

Figure 12. Bode Plots of Power Stage and Controller

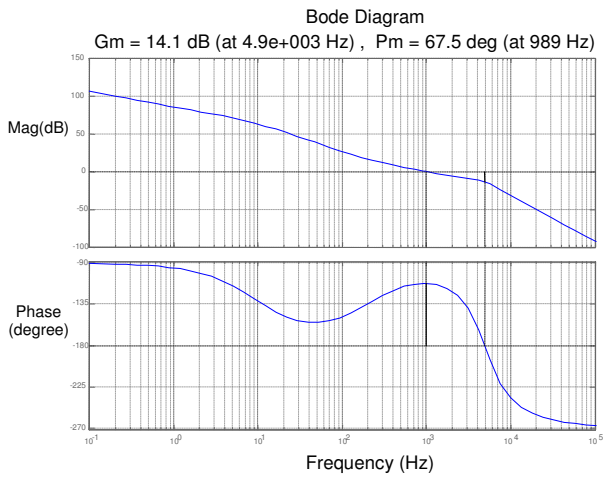

Figure 13. Frequency Response of the Converter with Peak Current mode Control

VII. Conclusion

Peak current mode control was implemented mainly with analog components until now. The control loop and ramp generation for slope compensation had analog components and so limits the design flexibility. But with present day processors having on chip peripherals like analog to digital converters, digital to analog converters and comparators, the control has become more feasible. Slope compensation to eliminate the sub harmonic oscillations can be easily incorporated with these processors. The amount of slope compensation can be adjusted depending on operating parameters of the converter. This guarantees required dynamic performance of the current control loop digitally

References

[1] Raymond B Ridley, "A new continuous time model for current mode control", IEEE transaction on Power Electronics, Vol. 6 No. 2. April 1991*)*

[2] T.Grote, F.Schafmeister, H.Figge, "Adaptive Digital Slope Compensation for Peak Current Mode Control", University of Paderborn.

[3] Application Note : U97, Modelling, Analysis and compensation of the Current mode converter, Texas Instruments Inc..

[4] Dr. Raymond B. Ridley, "Power Supply Design: Volume 1: Control"

[5] Application Report by Texas Instruments "Digital Peak Current Mode Control with Slope Compensation using TMS320F2803", June 2010

[6] Jian Li, "Current Mode Control: Modeling and its Digital Application", Dissertation submitted to Virginia Polytechnic Institute and State University, April 14, 1990

[7] L.H.Dixon, "Average CurrentMode Control of Switching Power Supplies", Unitrode Power Supply Design Seminar Handbook

[8] Dan Mitchell, Bob Mammano, "Designing Stable Control Loops".

[9] Dr Ali Shirsavar, "Designing Stable Digital Power Supplies", Biricha Digital Power Ltd.

[10] Robert Sheehan, "Understandin and Applying Current Mode Control Theory"

[11] Muhammad Saad Rahman, "Buck Converter Design Issues", Master thesis in Electronic Devices at Linkoping Institute of Technology, July 17,2007.

Authorized licensed use limited to: Intel Corporation via the Virtual Library. Downloaded on November 14,2023 at 11:21:27 UTC from IEEE Xplore. Restrictions apply.