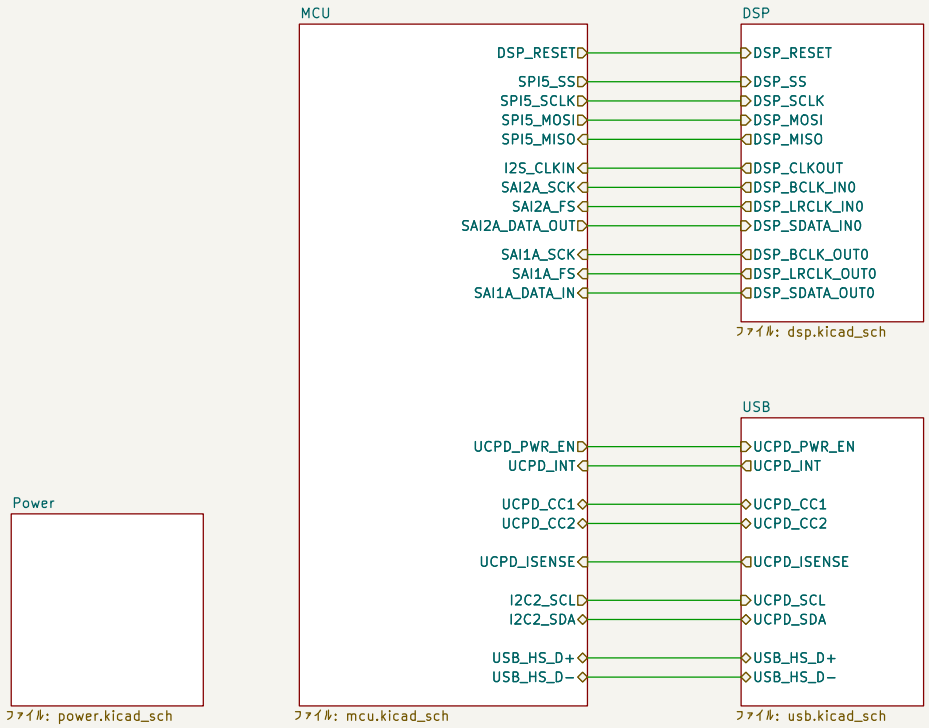

Sheet: /
File: STM32H7S3_Dev_Board.kicad_sch

Title:

Size: A4	Date:	**Rev:**
KiCad E.D.A. 9.0.7		Id: 1/5

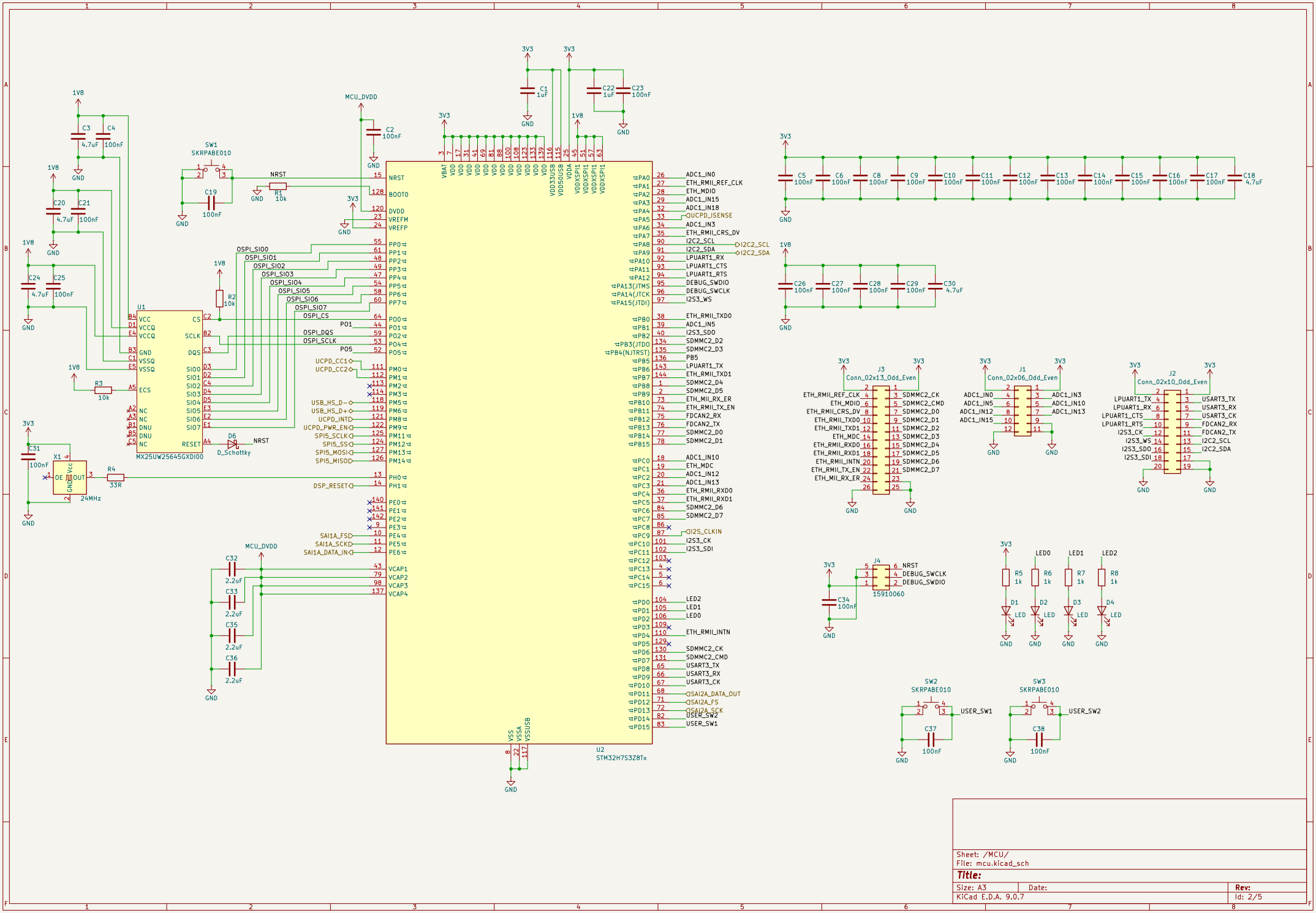
U2
STM32H7S3Z8Tx
U1
MX25UW25645GXDI00
J3
Conn_02x13_Odd_Even
J1
Conn_02x06_Odd_Even
J2
Conn_02x10_Odd_Even
J4
15910060
SW1
SKRPABE010
SW2
SKRPABE010
SW3
SKRPABE010
X1
24MHz
D6
D_Schottky
MCU_DVDD
3V3
1V8
GND
NRST
BOOT0
DVDD
VREFM
VREFP
OSPI_SIO0
OSPI_SIO1
OSPI_SIO2
OSPI_SIO3
OSPI_SIO4
OSPI_SIO5
OSPI_SIO6
OSPI_SIO7
OSPI_CS
OSPI_DQS
OSPI_SCLK
UCPD_CC1
UCPD_CC2
USB_HS_D-
USB_HS_D+
UCPD_INT
UCPD_PWR_EN
SPI5_SCLK
SPI5_SS
SPI5_MOSI
SPI5_MISO
DSP_RESET
SAI1A_FS
SAI1A_SCK
SAI1A_DATA_IN
ADC1_IN0
ETH_RMII_REF_CLK
ETH_MDIO
ADC1_IN15
ADC1_IN18
UCPD_ISENSE
ADC1_IN3
ETH_RMII_CRS_DV
I2C2_SCL
I2C2_SDA
LPUART1_RX
LPUART1_CTS
LPUART1_RTS
DEBUG_SWDIO
DEBUG_SWCLK
I2S3_WS
ETH_RMII_TXD0
ADC1_IN5
I2S3_SDO
SDMMC2_D2
SDMMC2_D3
PB5
LPUART1_TX
ETH_RMII_TXD1
SDMMC2_D4
SDMMC2_D5
ETH_MII_RX_ER
ETH_RMII_TX_EN
FDCAN2_RX
FDCAN2_TX
SDMMC2_D0
SDMMC2_D1
ADC1_IN10
ETH_MDC
ADC1_IN12
ADC1_IN13
ETH_RMII_RXD0
ETH_RMII_RXD1
SDMMC2_D6
SDMMC2_D7
I2S_CLKIN
I2S3_CK
I2S3_SDI
LED2
LED1
LED0
ETH_RMII_INTN
SDMMC2_CK
SDMMC2_CMD
USART3_TX
USART3_RX
USART3_CK
SAI2A_DATA_OUT
SAI2A_FS
SAI2A_SCK
USER_SW2
USER_SW1
LPUART1_TX
LPUART1_RX
LPUART1_CTS
LPUART1_RTS
I2S3_CK
I2S3_WS
I2S3_SDO
I2S3_SDI
FDCAN2_TX
FDCAN2_RX
I2C2_SCL
I2C2_SDA
ADC1_IN3
ADC1_IN5
ADC1_IN10
ADC1_IN12
ADC1_IN13
ADC1_IN15
Sheet: /MCU/
File: mcu.kicad_sch
Title:
Size: A3
Date:
Rev:
KiCad E.D.A. 9.0.7
Id: 2/5

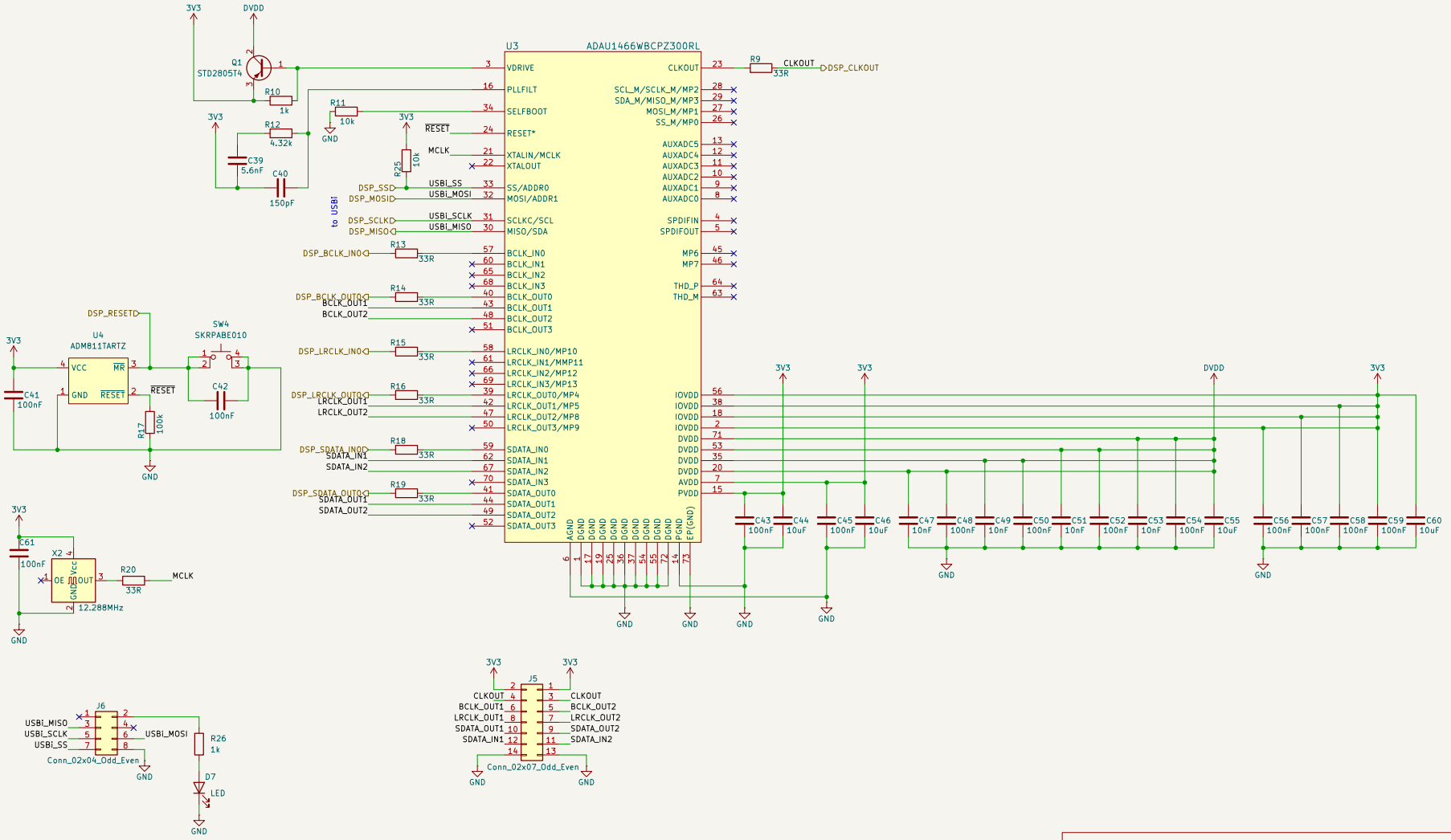

Sheet: /DSP/
File: dsp.kicad_sch

Title:

Size: A3 | Date: | **Rev:**
KiCad E.D.A. 9.0.7 | Id: 3/5

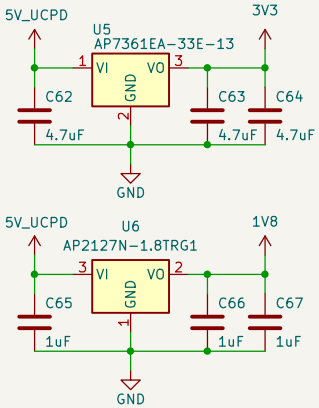

Sheet: /Power/
File: power.kicad_sch

Title:

Size: A4	Date:	**Rev:**
KiCad E.D.A. 9.0.7		Id: 4/5

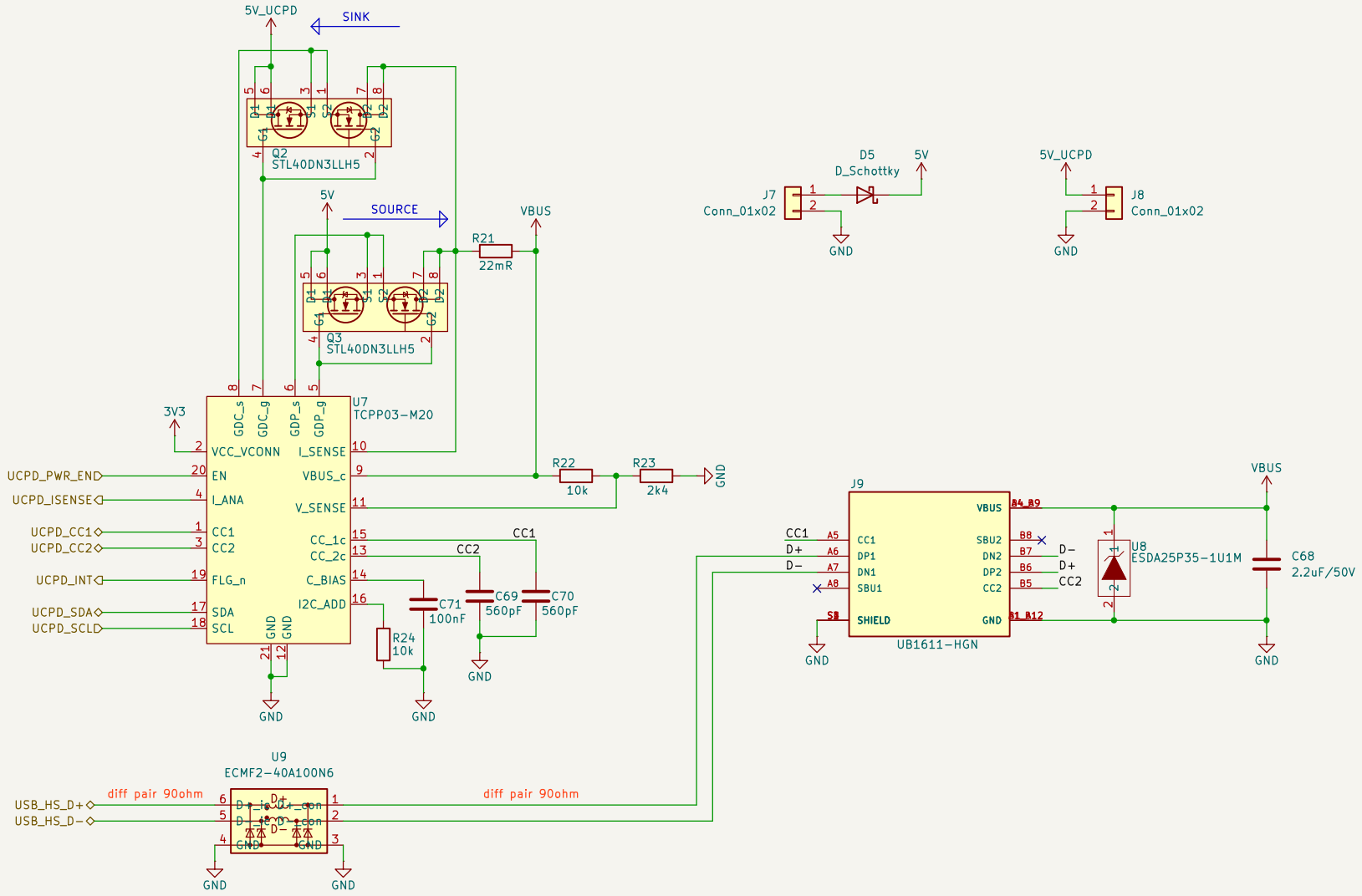

Sheet: /USB/
File: usb.kicad_sch

Title:

Size: A4	Date:	Rev:
KiCad E.D.A. 9.0.7		Id: 5/5