CRY512

1/2" IEPE Microphone Preamplifier with SMB Connector, 90° Corner

Features

- **Key Specifications**

Frequency Range	10 Hz to 100 kHz (±0.5 dB)
Power Supply	IEPE(2mA to 20mA)
Max Output Voltage	>7Vp

- **Applications**

  For use with prepolarized condenser microphones

Introduction

CRY512 is a measurement microphone preamplifier with a 90° corner, which can be used with all prepolarized condenser microphones.

CRY512 converts high input impedance to low output impedance, allowing longer extension cords to be used. Its advantage is that the background noise is low and it hardly causes a load on the microphone. The use of stainless steel material gives it good toughness and durability.

Highlights

- **What is IEPE?**

  IEPE is a generic name for CRYSOUND products which operate on a constant current power supply. IEPE products give output signals in the form of voltage modulation on the power supply line. One of the advantages of this is that you can use inexpensive coaxial cables.

- **Compatibility**

  The CRY512 IEPE preamplifier can be used with prepolarized measurement microphones. It can also be used with data acquisition hardware that supports IEPE microphones, such as the CRY6151B electroacoustic analyzer.

- **Calibration**

  Each CRYSOUND preamplifier is calibrated at the factory using traceable calibration equipment. Calibration certificates are provided with each unit. CRYSOUND recommends recalibration at least once a year.

- **Quality & Warranty**

  All CRYSOUND preamplifiers are made of stainless steel with good corrosion resistance and robustness, suitable for long-term storage.

  CRYSOUND preamplifiers enjoy a one-year warranty period. We will provide users with comprehensive after-sales support services.

Technical Specifications

Specifications

Frequency Response	20 Hz to 50 kHz (±0.2 dB) 10 Hz to 100 kHz (±0.5 dB)
Input Impedance	＞2 GΩ/50 pF
Output Impedance	＜20 Ω
Distortion (THD)	＜0. 1%
Max Output Voltage	＞7 Vp
Power Supply	IEPE(2 mA to 20mA, Typical: 4 mA)
Noise (A-weighting)	＜3 μVrms
Noise (linear 20 Hz to 20kHz)	＜10 μVrms
DC Bias voltage	12 V±2 V
Connector Type	SMB
Temperature	-30°C to +70°C(-22°F to 158°F)
Thread Interface Diameter	11.7 mm-60 UNS

Dimensions

Height	11.7mm (0.461")
Diameter	37.8mm (1.488")

Drawings(mm)[inch]

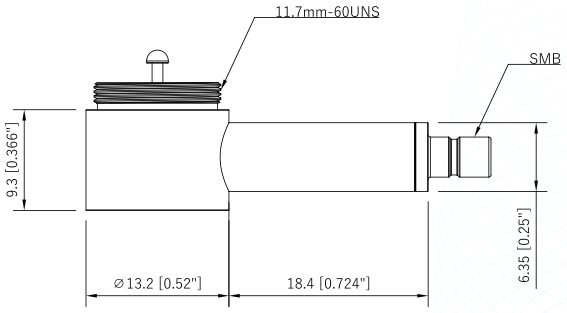

Fig.1 CRY512 preamplifier Drawings

Ordering Information

Optional Accessories

Microphone Cartridges	CRY313 1" Free-field Prepolarized Microphone CRY333 1/2" Free-field Preamplifier Microphone CRY344 1/4" Pressure-field Prepolarized Microphone
Adapter	TA0501 1/2" to 1" Adapter Ring TA0503 1/2" to 1/4" Adapter Ring
Electroacoustic Analyzer	CRY6151B Electroacoustic Analyzer
Power Supply	CRY575 Three-Channel Microphone Power Supply
Cable	SMB to BNC Cable /1.5m SMB to BNC Cable /0.8m SMB to BNC Cable /2.0m SMB to BNC Cable /0.6m

Related Products

CRY502B	1/2" microphone preamplifier comes with cable, DB9 interface
CRY510B	1/2" IEPE microphone preamplifier with 10-32UNF connector and TEDS, very short
CRY508	1/2" IEPE microphone preamplifier with BNC connector, base-type
CRY547	1/4" IEPE microphone preamplifier with SMB connector and TEDS
CRY543	1/4" microphone preamplifier comes with cable, DB9 interface