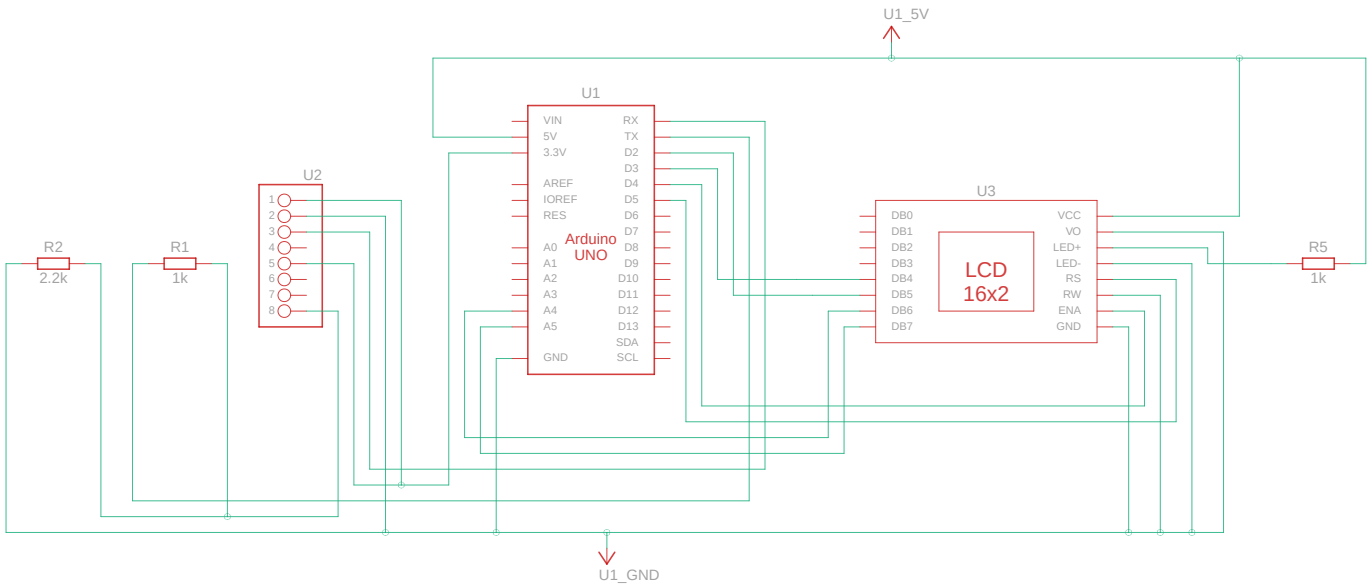

Made with Tinkercad®

Title: Copy of Baggage Tracking System	
Date: 3/24/2024, 8:26:30 PM	Sheet: 1/1