STM32F103C8T6

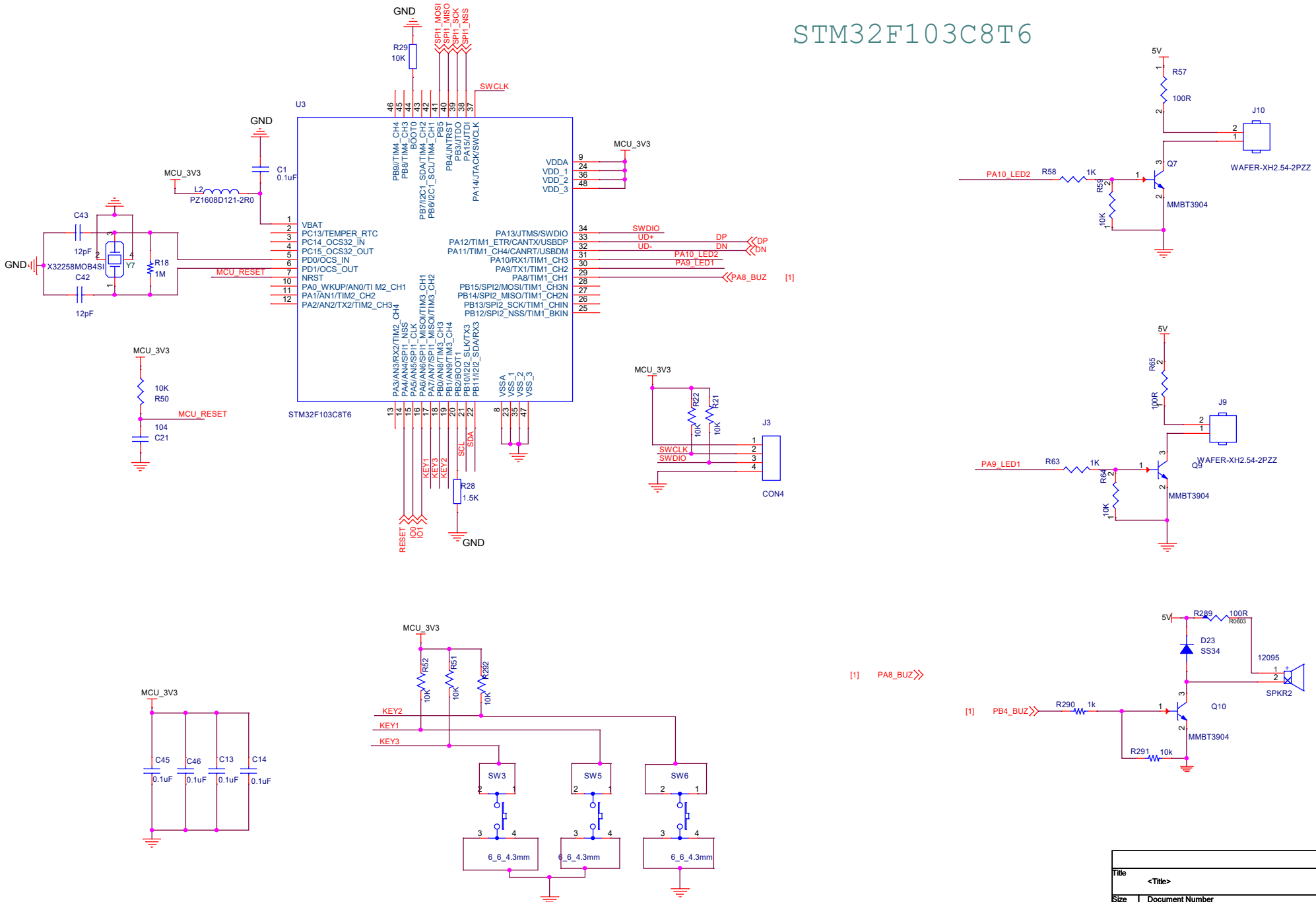

Title	<Title>	
Size A3	Document Number <Doc>	Rev <RevCode>
Date: Saturday, February 07, 2026	Sheet 1 of 1	

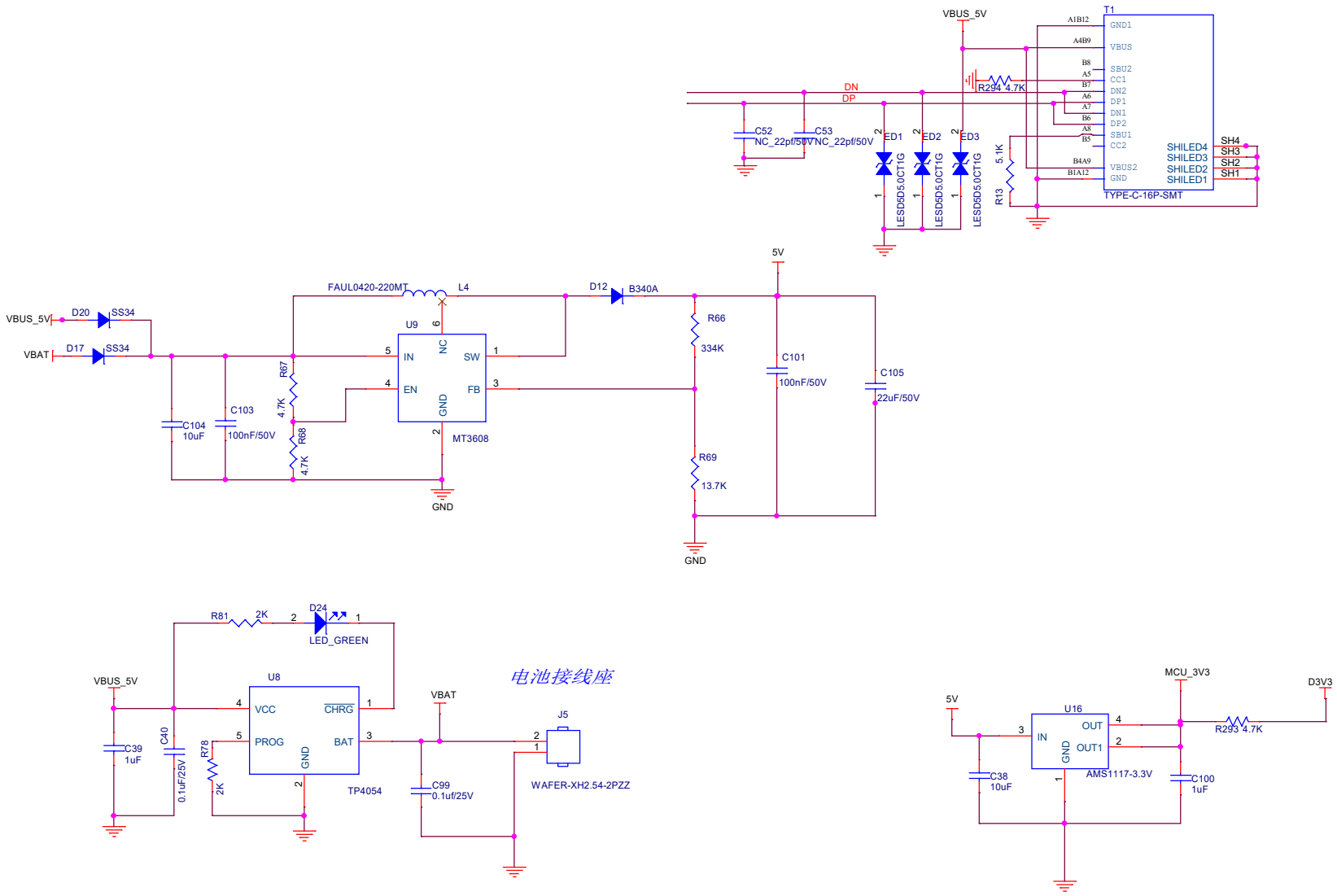

Title	<Title>	
Size A3	Document Number <Doc>	Rev <RevCode>
Date: Friday, February 06, 2026	Sheet 1 of 1	

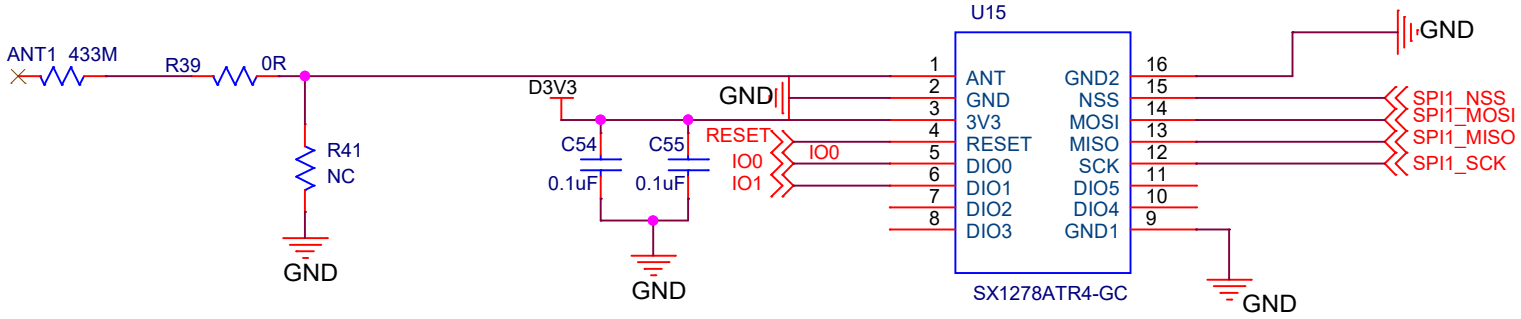

Title	<Title>	
Size A	Document Number <Doc>	Rev <RevCode>
Date: Friday, February 06, 2026	Sheet 1 of 1	