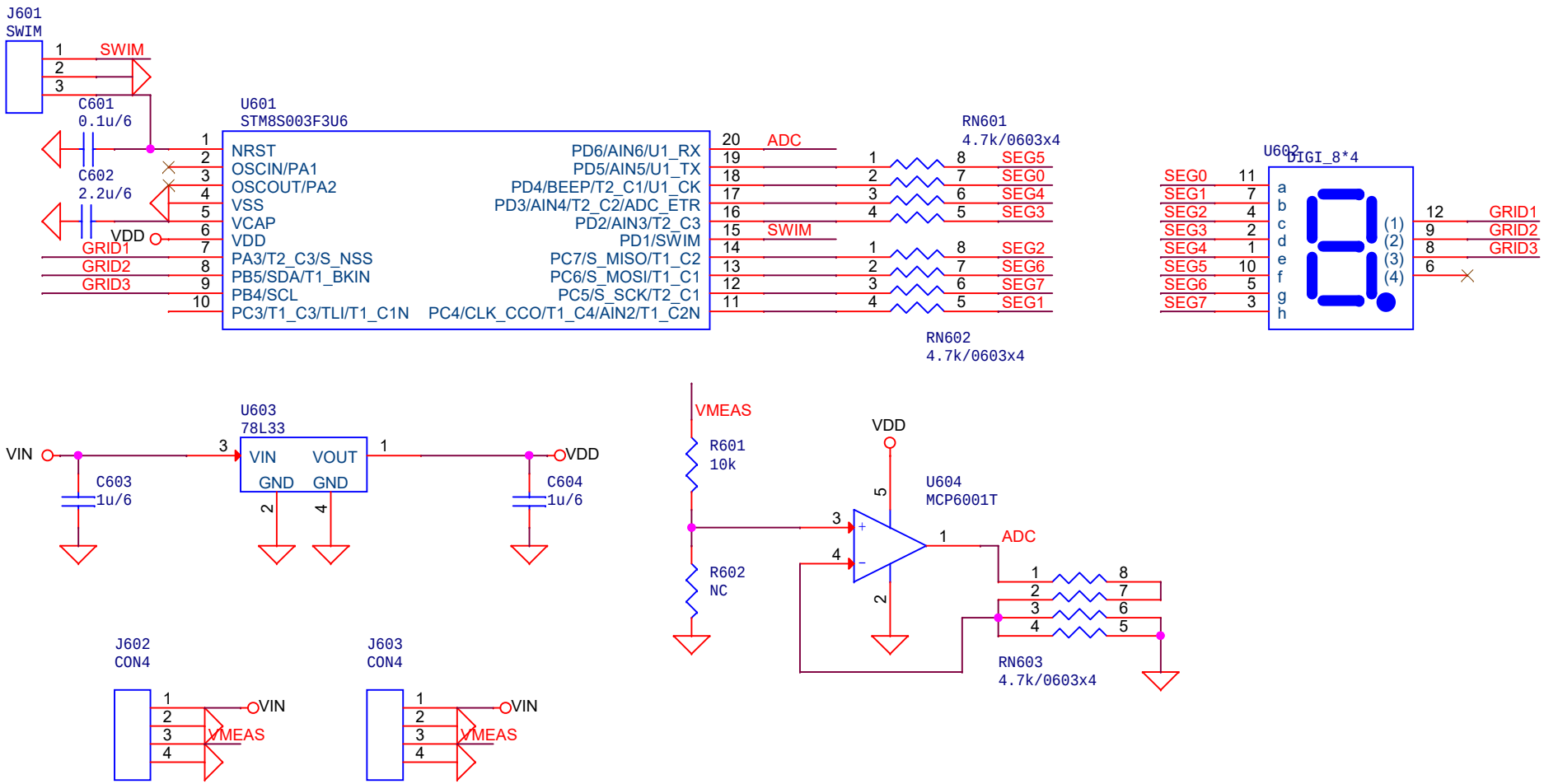

Size	Document Number	Rev
A	<Doc>	1.1
Date: Wednesday, November 18, 2020	Sheet 1 of 1	