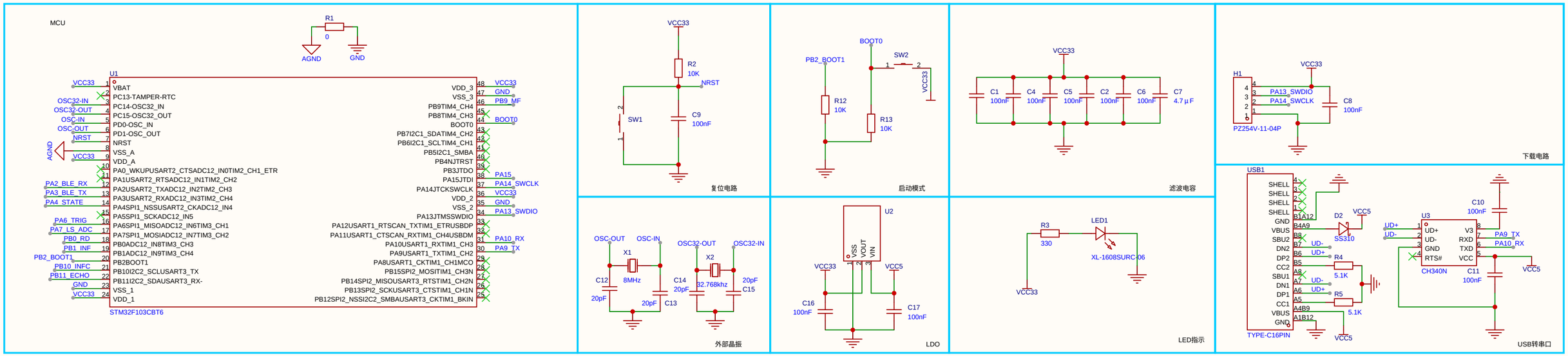
MCU
R1
0
AGND
GND
U1
VBAT
PC13-TAMPER-RTC
PC14-OSC32_IN
PC15-OSC32_OUT
PD0-OSC_IN
PD1-OSC_OUT
NRST
VSS_A
VDD_A
PA0_WKUPUSART2_CTSADC12_IN0TIM2_CH1_ETR
PA1USART2_RTSADC12_IN1TIM2_CH2
PA2USART2_TXADC12_IN2TIM2_CH3
PA3USART2_RXADC12_IN3TIM2_CH4
PA4SPI1_NSSUSART2_CKADC12_IN4
PA5SPI1_SCKADC12_IN5
PA6SPI1_MISOADC12_IN6TIM3_CH1
PA7SPI1_MOSIADC12_IN7TIM3_CH2
PB0ADC12_IN8TIM3_CH3
PB1ADC12_IN9TIM3_CH4
PB2BOOT1
PB10I2C2_SCLUSART3_TX
PB11I2C2_SDAUSART3_RX-
VSS_1
VDD_1
VDD_3
VSS_3
PB9TIM4_CH4
PB8TIM4_CH3
BOOT0
PB7I2C1_SDATIM4_CH2
PB6I2C1_SCLTIM4_CH1
PB5I2C1_SMBA
PB4NJTRST
PB3JTDO
PA15JTDI
PA14JTCKSWCLK
VDD_2
VSS_2
PA13JTMSSWDIO
PA12USART1_RTSCAN_TXTIM1_ETRUSBDP
PA11USART1_CTSCAN_RXTIM1_CH4USBDM
PA10USART1_RXTIM1_CH3
PA9USART1_TXTIM1_CH2
PA8USART1_CKTIM1_CH1MCO
PB15SPI2_MOSITIM1_CH3N
PB14SPI2_MISOUSART3_RTSTIM1_CH2N
PB13SPI2_SCKUSART3_CTSTIM1_CH1N
PB12SPI2_NSSI2C2_SMBAUSART3_CKTIM1_BKIN
STM32F103CBT6
VCC33
OSC32-IN
OSC32-OUT
OSC-IN
OSC-OUT
NRST
AGND
VCC33
PA2_BLE_RX
PA3_BLE_TX
PA4_STATE
PA6_TRIG
PA7_LS_ADC
PB0_RD
PB1_INF
PB2_BOOT1
PB10_INFC
PB11_ECHO
GND
VCC33
VCC33
GND
PB9_MF
BOOT0
PA15
PA14_SWCLK
VCC33
GND
PA13_SWDIO
PA10_RX
PA9_TX
VCC33
R2
10K
NRST
SW1
C9
100nF
复位电路
BOOT0
PB2_BOOT1
SW2
VCC33
R12
10K
R13
10K
启动模式
VCC33
C1
100nF
C4
100nF
C5
100nF
C2
100nF
C6
100nF
C7
4.7μF
滤波电容
VCC33
H1
PA13_SWDIO
PA14_SWCLK
C8
100nF
PZ254V-11-04P
下载电路
OSC-OUT
OSC-IN
X1
C12
8MHz
20pF
20pF
C13
OSC32-OUT
OSC32-IN
X2
C14
20pF
32.768khz
20pF
C15
外部晶振
U2
VSS
VOUT
VIN
VCC33
VCC5
C16
100nF
C17
100nF
LDO
R3
330
LED1
XL-1608SURC-06
VCC33
LED指示
USB1
SHELL
SHELL
SHELL
SHELL
GND
VBUS
SBU2
DN2
DP2
CC2
SBU1
DN1
DP1
CC1
VBUS
GND
B1A12
B4A9
B8
B7
B6
B5
A8
A7
A6
A5
A4B9
A1B12
UD-
UD+
UD-
UD+
D2
SS310
VCC5
R4
5.1K
R5
5.1K
VCC5
TYPE-C16PIN
UD+
UD-
U3
UD+
UD-
GND
RTS#
V3
RXD
TXD
VCC
CH340N
C10
100nF
C11
100nF
PA9_TX
PA10_RX
VCC5
USB转串口

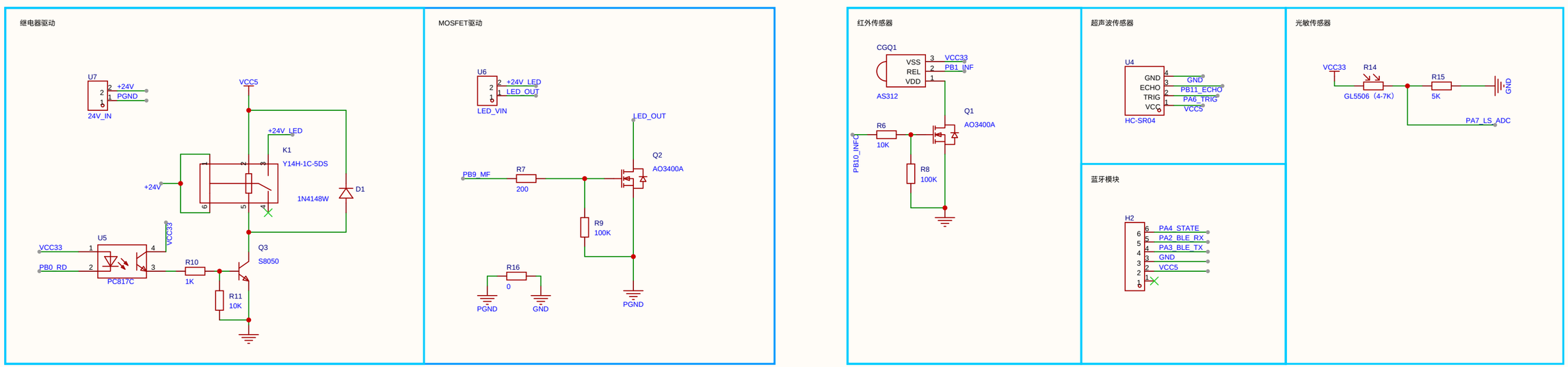
继电器驱动
U7
+24V
PGND
24V_IN
VCC5
+24V_LED
K1
Y14H-1C-5DS
+24V
1N4148W
D1
U5
VCC33
VCC33
PB0_RD
PC817C
R10
1K
Q3
S8050
R11
10K
MOSFET驱动
U6
+24V_LED
LED_OUT
LED_VIN
LED_OUT
Q2
AO3400A
PB9_MF
R7
200
R9
100K
R16
0
PGND
GND
PGND
红外传感器
CGQ1
VSS
REL
VDD
VCC33
PB1_INF
AS312
Q1
AO3400A
R6
10K
PB10_INFC
R8
100K
超声波传感器
U4
GND
ECHO
TRIG
VCC
GND
PB11_ECHO
PA6_TRIG
VCC5
HC-SR04
蓝牙模块
H2
PA4_STATE
PA2_BLE_RX
PA3_BLE_TX
GND
VCC5
光敏传感器
VCC33
R14
GL5506（4-7K）
R15
5K
GND
PA7_LS_ADC