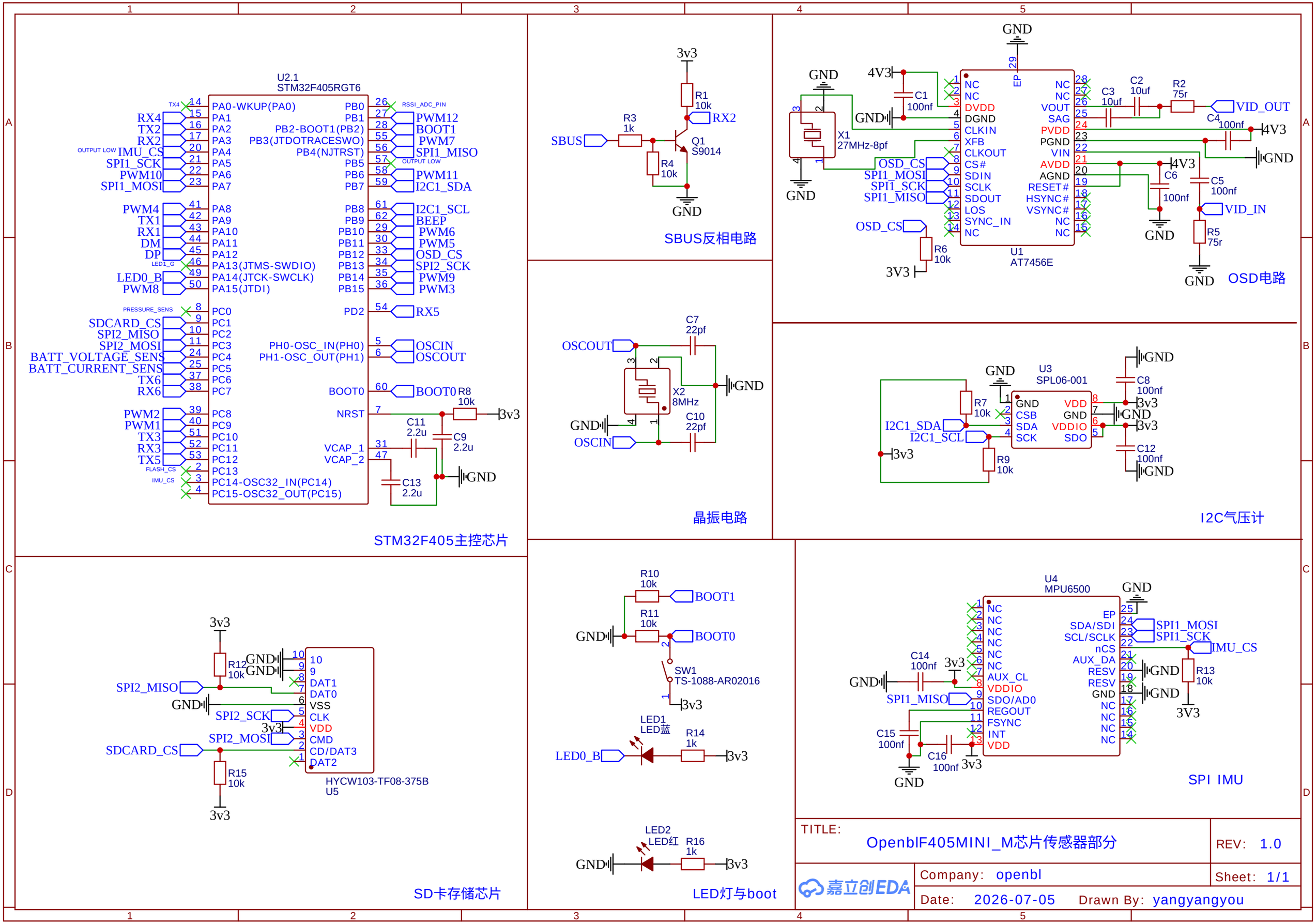
U2.1
STM32F405RGT6
PA0-WKUP(PA0)
PA1
PA2
PA3
PA4
PA5
PA6
PA7
PA8
PA9
PA10
PA11
PA12
PA13(JTMS-SWDIO)
PA14(JTCK-SWCLK)
PA15(JTDI)
PC0
PC1
PC2
PC3
PC4
PC5
PC6
PC7
PC8
PC9
PC10
PC11
PC12
PC13
PC14-OSC32_IN(PC14)
PC15-OSC32_OUT(PC15)
PB0
PB1
PB2-BOOT1(PB2)
PB3(JTDOTRACESWO)
PB4(NJTRST)
PB5
PB6
PB7
PB8
PB9
PB10
PB11
PB12
PB13
PB14
PB15
PD2
PH0-OSC_IN(PH0)
PH1-OSC_OUT(PH1)
BOOT0
NRST
VCAP_1
VCAP_2
RX4
TX2
RX2
IMU_CS
SPI1_SCK
PWM10
SPI1_MOSI
PWM4
TX1
RX1
DM
DP
LED0_B
PWM8
SDCARD_CS
SPI2_MISO
SPI2_MOSI
BATT_VOLTAGE_SENS
BATT_CURRENT_SENS
TX6
RX6
PWM2
PWM1
TX3
RX3
TX5
PWM12
BOOT1
PWM7
SPI1_MISO
PWM11
I2C1_SDA
I2C1_SCL
BEEP
PWM6
PWM5
OSD_CS
SPI2_SCK
PWM9
PWM3
RX5
OSCIN
OSCOUT
BOOT0
R8
10k
3v3
C11
2.2u
C9
2.2u
C13
2.2u
GND
STM32F405主控芯片
3v3
R1
10k
RX2
SBUS
R3
1k
Q1
S9014
R4
10k
GND
SBUS反相电路
GND
4V3
C1
100nf
X1
27MHz-8pf
NC
DVDD
DGND
CLKIN
XFB
CLKOUT
CS#
SDIN
SCLK
SDOUT
LOS
SYNC_IN
VOUT
SAG
PVDD
PGND
VIN
AVDD
AGND
RESET#
HSYNC#
VSYNC#
EP
C2
10uf
C3
10uf
R2
75r
VID_OUT
C4
100nf
C6
100nf
C5
100nf
VID_IN
R5
75r
R6
10k
U1
AT7456E
OSD电路
C7
22pf
X2
8MHz
C10
22pf
晶振电路
U3
SPL06-001
VDD
VDDIO
SDO
R7
10k
R9
10k
C8
100nf
C12
100nf
I2C气压计
R12
10k
R15
10k
10
9
DAT1
DAT0
VSS
CLK
VDD
CMD
CD/DAT3
DAT2
HYCW103-TF08-375B
U5
SD卡存储芯片
R10
10k
R11
10k
SW1
TS-1088-AR02016
LED1
LED蓝
R14
1k
LED2
LED红
R16
1k
LED灯与boot
U4
MPU6500
AUX_CL
SDO/AD0
REGOUT
FSYNC
INT
SDA/SDI
SCL/SCLK
nCS
AUX_DA
RESV
C14
100nf
C15
100nf
C16
100nf
R13
10k
SPI IMU
TITLE:
OpenblF405MINI_M芯片传感器部分
REV: 1.0
Company: openbl
Sheet: 1/1
Date: 2026-07-05
Drawn By: yangyangyou
嘉立创EDA

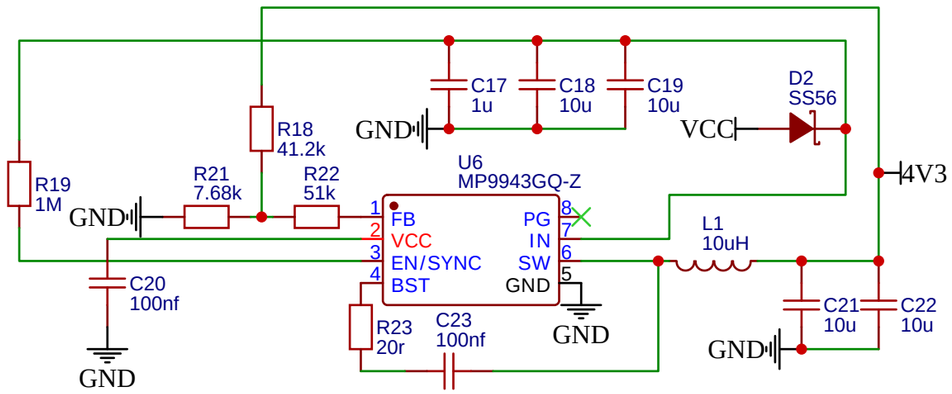

4v3核心供电

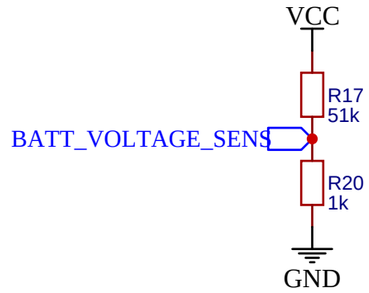

电压采样

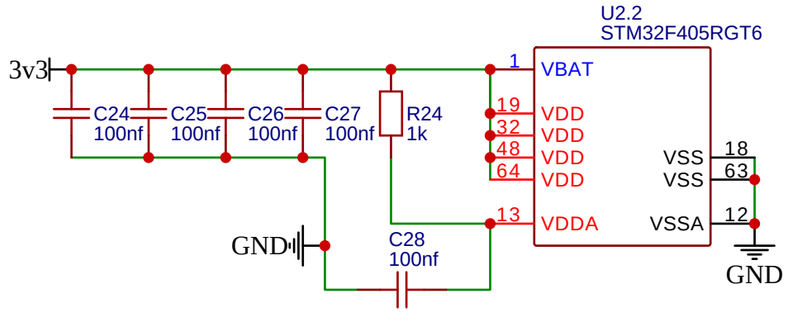

MCU核心供电

5V供电（未配备）

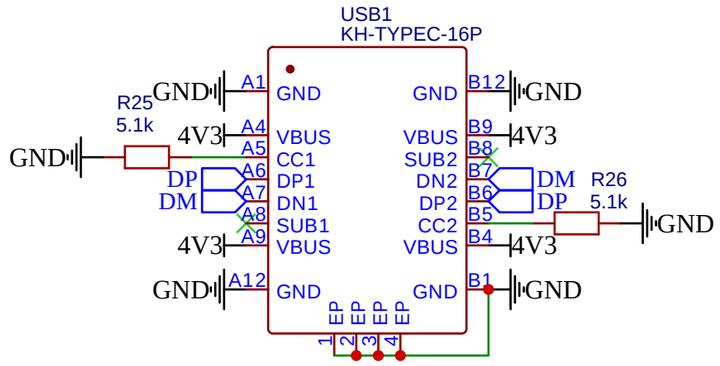

USB_TYPEC接口

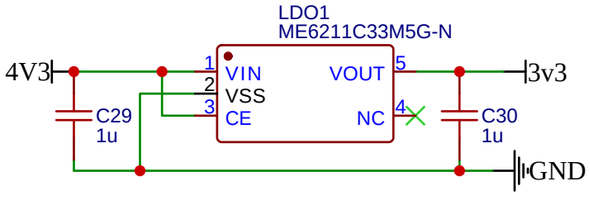

3V3核心供电

TITLE: 供电部分		REV: 1.0
嘉立创EDA	Company: openbl	Sheet: 1/1
	Date: 2026-01-25 Drawn By: yangyangyou	

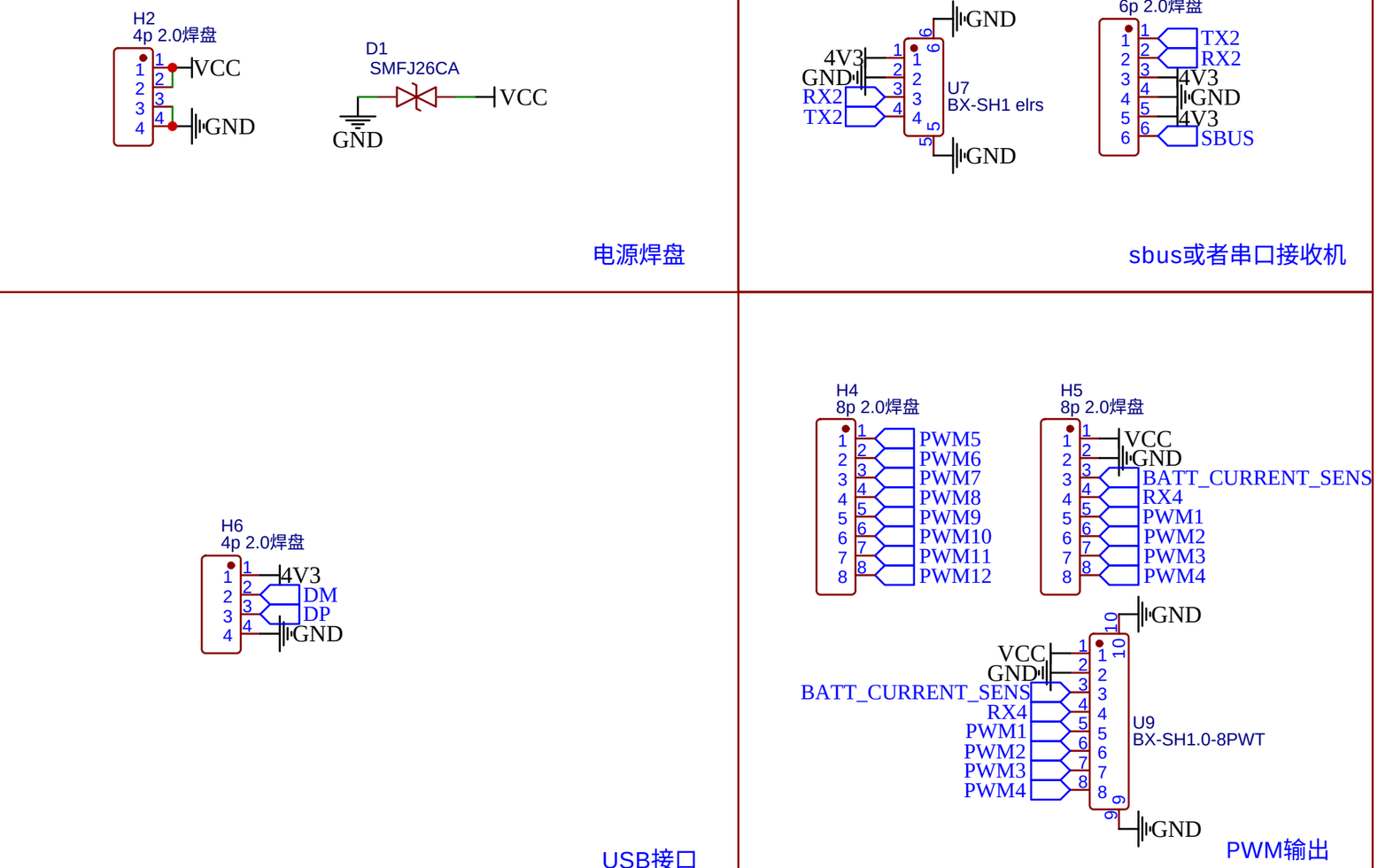

TITLE: 接口		REV: 1.0
嘉立创EDA	Company: openbl	Sheet: 1/1
	Date: 2026-01-25 Drawn By: yangyangyou	