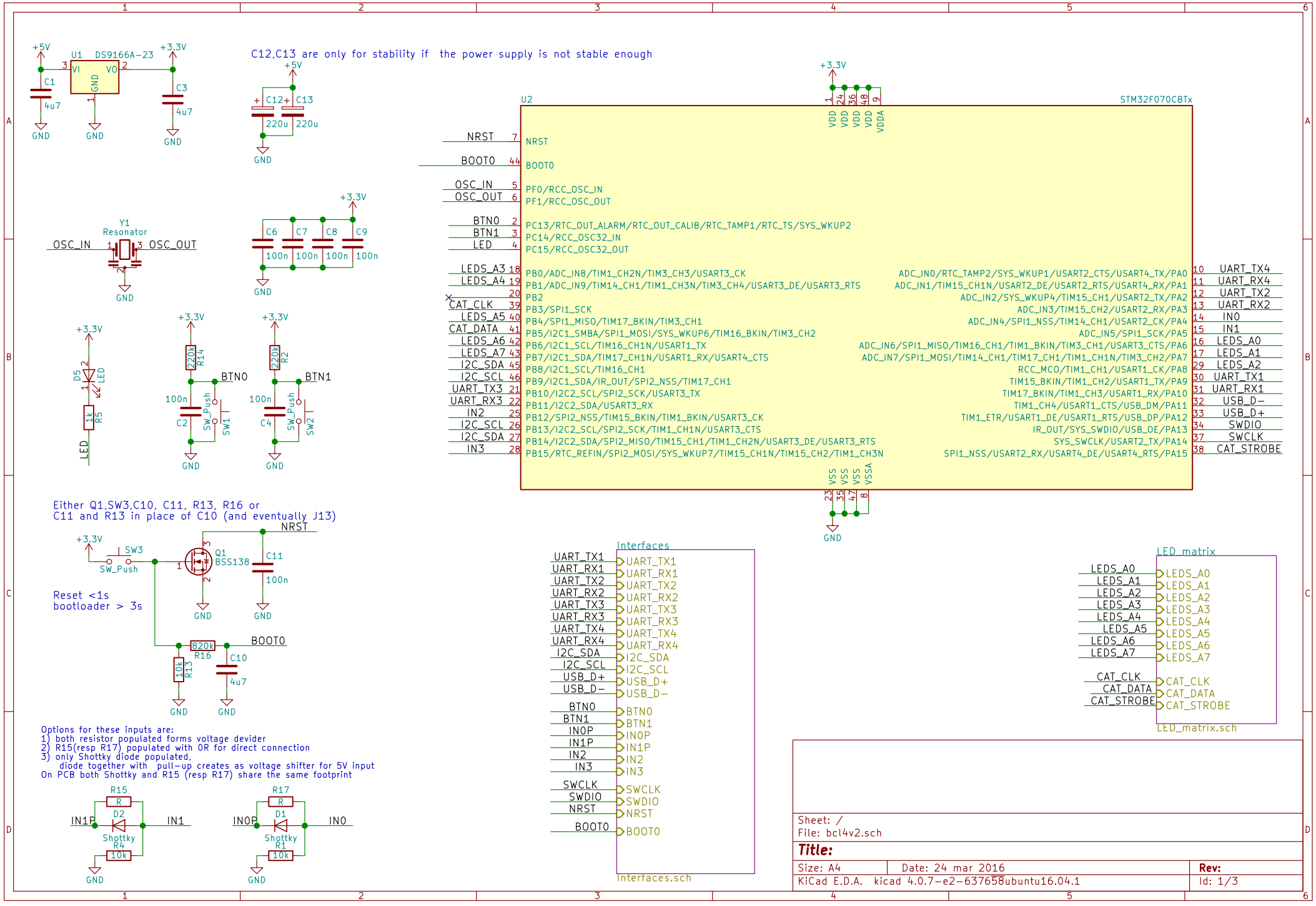
U1 DS9166A-23
+5V
+3.3V
C1 4u7
C3 4u7
GND
C12,C13 are only for stability if the power supply is not stable enough
C12 220u
C13 220u
Y1 Resonator
OSC_IN
OSC_OUT
C6 100n
C7 100n
C8 100n
C9 100n
D5 LED
R5 1k
R14 220k
R2 220k
BTN0
BTN1
C2 100n
C4 100n
SW_Push
SW1
SW2
U2 STM32F070CBTx
NRST
BOOT0
PF0/RCC_OSC_IN
PF1/RCC_OSC_OUT
PC13/RTC_OUT_ALARM/RTC_OUT_CALIB/RTC_TAMP1/RTC_TS/SYS_WKUP2
PC14/RCC_OSC32_IN
PC15/RCC_OSC32_OUT
PB0/ADC_IN8/TIM1_CH2N/TIM3_CH3/USART3_CK
PB1/ADC_IN9/TIM14_CH1/TIM1_CH3N/TIM3_CH4/USART3_DE/USART3_RTS
PB2
PB3/SPI1_SCK
PB4/SPI1_MISO/TIM17_BKIN/TIM3_CH1
PB5/I2C1_SMBA/SPI1_MOSI/SYS_WKUP6/TIM16_BKIN/TIM3_CH2
PB6/I2C1_SCL/TIM16_CH1N/USART1_TX
PB7/I2C1_SDA/TIM17_CH1N/USART1_RX/USART4_CTS
PB8/I2C1_SCL/TIM16_CH1
PB9/I2C1_SDA/IR_OUT/SPI2_NSS/TIM17_CH1
PB10/I2C2_SCL/SPI2_SCK/USART3_TX
PB11/I2C2_SDA/USART3_RX
PB12/SPI2_NSS/TIM15_BKIN/TIM1_BKIN/USART3_CK
PB13/I2C2_SCL/SPI2_SCK/TIM1_CH1N/USART3_CTS
PB14/I2C2_SDA/SPI2_MISO/TIM15_CH1/TIM1_CH2N/USART3_DE/USART3_RTS
PB15/RTC_REFIN/SPI2_MOSI/SYS_WKUP7/TIM15_CH1N/TIM15_CH2/TIM1_CH3N
ADC_IN0/RTC_TAMP2/SYS_WKUP1/USART2_CTS/USART4_TX/PA0
ADC_IN1/TIM15_CH1N/USART2_DE/USART2_RTS/USART4_RX/PA1
ADC_IN2/SYS_WKUP4/TIM15_CH1/USART2_TX/PA2
ADC_IN3/TIM15_CH2/USART2_RX/PA3
ADC_IN4/SPI1_NSS/TIM14_CH1/USART2_CK/PA4
ADC_IN5/SPI1_SCK/PA5
ADC_IN6/SPI1_MISO/TIM16_CH1/TIM1_BKIN/TIM3_CH1/USART3_CTS/PA6
ADC_IN7/SPI1_MOSI/TIM14_CH1/TIM17_CH1/TIM1_CH1N/TIM3_CH2/PA7
RCC_MCO/TIM1_CH1/USART1_CK/PA8
TIM15_BKIN/TIM1_CH2/USART1_TX/PA9
TIM17_BKIN/TIM1_CH3/USART1_RX/PA10
TIM1_CH4/USART1_CTS/USB_DM/PA11
TIM1_ETR/USART1_DE/USART1_RTS/USB_DP/PA12
IR_OUT/SYS_SWDIO/USB_OE/PA13
SYS_SWCLK/USART2_TX/PA14
SPI1_NSS/USART2_RX/USART4_DE/USART4_RTS/PA15
Either Q1,SW3,C10, C11, R13, R16 or
C11 and R13 in place of C10 (and eventually J13)
SW3 SW_Push
Q1 BSS138
C11 100n
Reset <1s
bootloader > 3s
R16 820k
R13 10k
C10 4u7
Options for these inputs are:
1) both resistor populated forms voltage devider
2) R15(resp R17) populated with 0R for direct connection
3) only Shottky diode populated,
diode together with pull-up creates as voltage shifter for 5V input
On PCB both Shottky and R15 (resp R17) share the same footprint
R15 R
D2 Shottky
R4 10k
IN1P
IN1
R17 R
D1 Shottky
R1 10k
IN0P
IN0
Interfaces
Interfaces.sch
LED_matrix
LED_matrix.sch
Sheet: /
File: bcl4v2.sch
Title:
Size: A4
Date: 24 mar 2016
Rev:
KiCad E.D.A. kicad 4.0.7-e2-637658ubuntu16.04.1
Id: 1/3

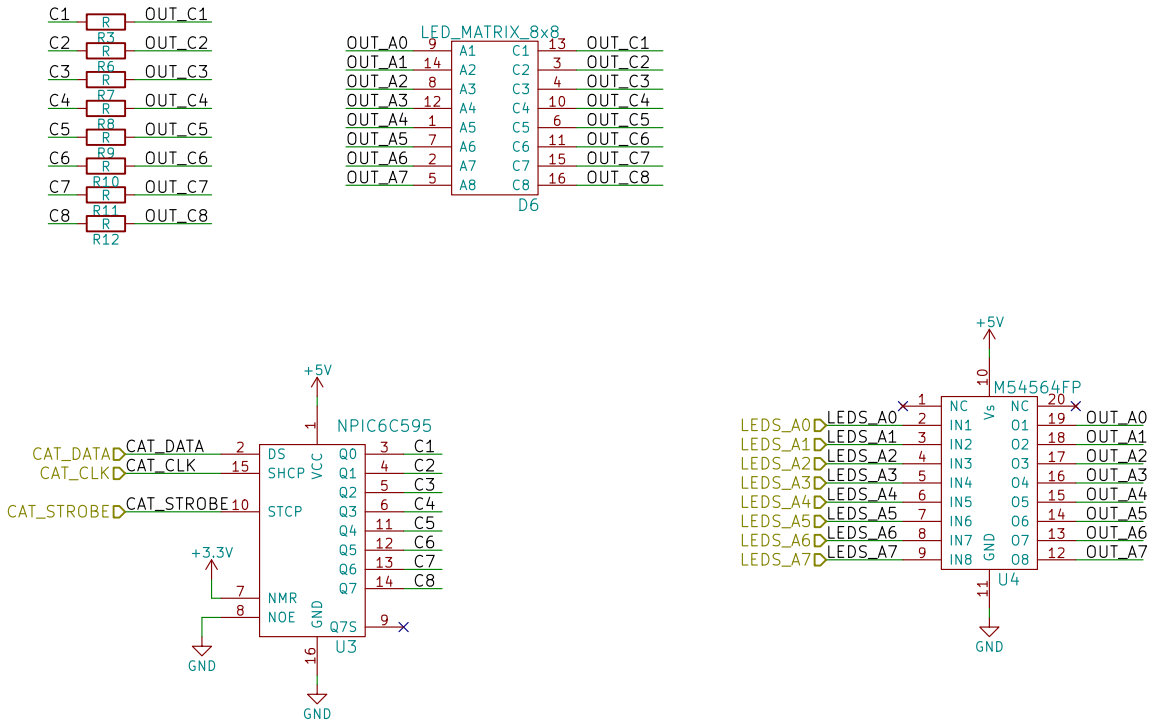

Sheet: /LED_matrix/
File: LED_matrix.sch

Title:

Size: A4	Date:	Rev:
KiCad E.D.A. kicad 4.0.7-e2-637658ubuntu16.04.1		Id: 2/3

The P-MOSFET is protection against wrong polarity of input.
But only in case that no power is applied to the USB.
The P-MOSFET allows to powers the rail from the USB as well,
but once open by the USB power, there is no protection at all.

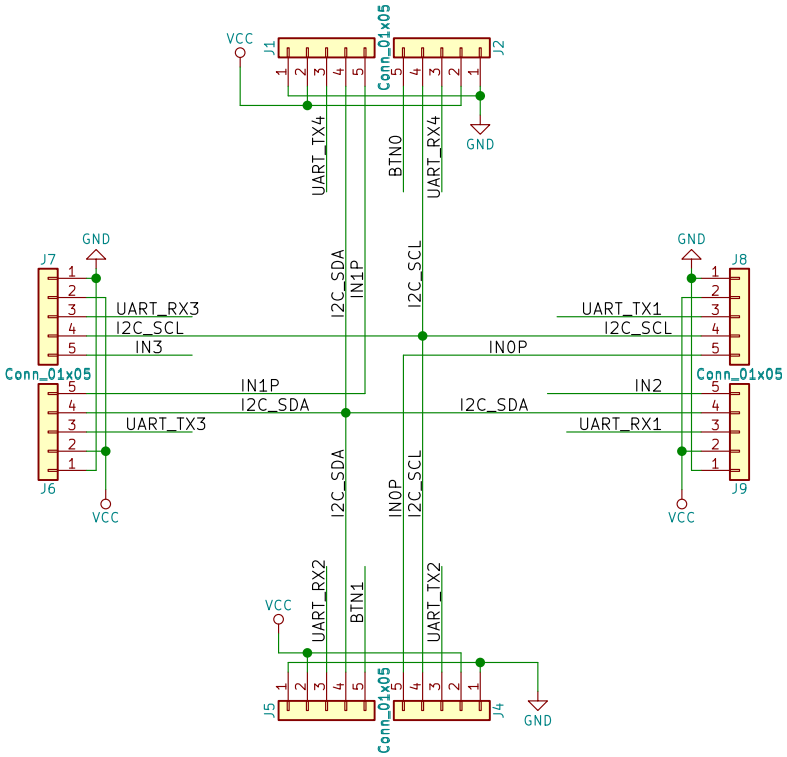

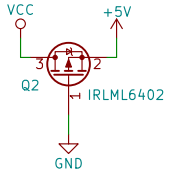

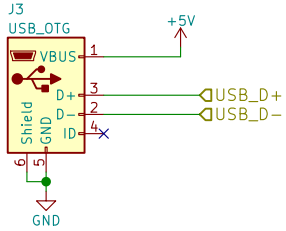

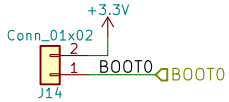

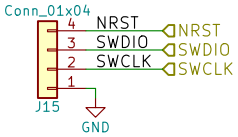

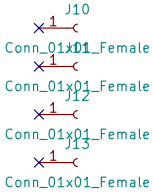

UART_TX1 — UART_TX1
UART_RX1 — UART_RX1
UART_TX2 — UART_TX2
UART_RX2 — UART_RX2
UART_TX3 — UART_TX3
UART_RX3 — UART_RX3
UART_TX4 — UART_TX4
UART_RX4 — UART_RX4

BTN0 — BTN0
BTN1 — BTN1
IN0P — IN0P
IN1P — IN1P
IN2 — IN2
IN3 — IN3

I2C_SCL — I2C_SCL
I2C_SDA — I2C_SDA

Sheet: /Interfaces/
File: Interfaces.sch

Title:

Size: A4	Date:	Rev:
KiCad E.D.A. kicad 4.0.7-e2-637658ubuntu16.04.1		Id: 3/3