| ITEM NO. | PART NUMBER | DESCRIPTION | MANUFACTURER | MANUFACTURER P/N | QTY. |
|---|---|---|---|---|---|
| 1 | 1225-10930 | WHITE, COAXIAL LED SPOT LIGHT | EDMUND OPTICS | 66-861 | 1 |
| 2 | 1225-11053 | LENS, TELECENTRIC, FOCUSABLE, 0.75 MAG, 85-99WD | EDMUND OPTICS | 36192 | 1 |
| 3 | 1225-11118 | HIROSE FOCUS TUNABLE LENS ELEC DRIVER | EDMUND OPTICS | 88-940 | 1 |
| 4 | 1225-11119 | HIROSE CONNECTOR TUNABLE LENS 1 METER | EDMUND OPTICS | 88-941 | 1 |
| 5 | 1225-10933 | CAMERA, XIMEA XIC, MC050CG-SY-UB | XIMEA | MC050CG-SY-UB | 1 |
| 6 | 1225-10934 | BASE, MOUNT, KNIFE CAM | | | 1 |
| 7 | 1225-10936 | ARM, MOUNT, KNIFE CAM | | | 1 |
| 8 | 1225-10937 | CLAMP PLATE, MOUNT, KNIFE CAM | | | 1 |
| 9 | 1225-11054-01 | BASE, MOUNT, KNIFE CAM LENS | | | 1 |
| 10 | 1225-11054-02 | CLAMP, MOUNT, KNIFE CAM LENS | | | 2 |
| 11 | 1225-11055-01 | CLAMP, KNIFE CAM ILLUMINATOR, LEFT | | | 1 |
| 12 | 1225-11055-02 | CLAMP, KNIFE CAM ILLUMINATOR, RIGHT | | | 1 |
| 13 | 1225-10979 | KNOB WITH SCREW HEAD MOUNT, SIX-LOBE, FOR M6 SCREW | MCMASTER-CARR | 91175A071 | 2 |
| 14 | 1225-10938 | 1225-10938-18 | MCMASTER-CARR | 93856A211-18 | 2 |
| 15 | 1225-10945 | SPLIT LOCK WASHER, 6.5mm ID, 9.9mm OD, 1.5mm THK, 18-8 SS | MCMASTER-CARR | 91111A129 | 2 |
| 16 | 1225-10939 | FHSS, 3mm THD, 8mm LG, 18-8 SS | MCMASTER-CARR | 92125A128 | 2 |
| 17 | 1225-10943 | SHCS, 3mm THD, 8mm LG, 18-8 SS | MCMASTER-CARR | 91292A112 | 5 |
| 18 | 1225-11107 | SHCS, 6mm X 14 LG, 18-8 SS | McMaster Carr | 91292A070 | 2 |

NOTE: NOT SHOWN
NOTE: NOT SHOWN

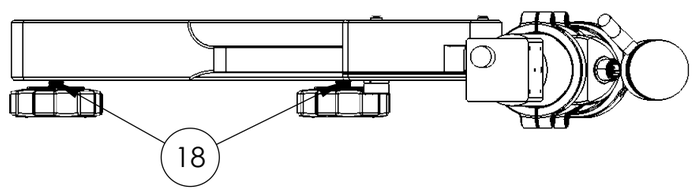


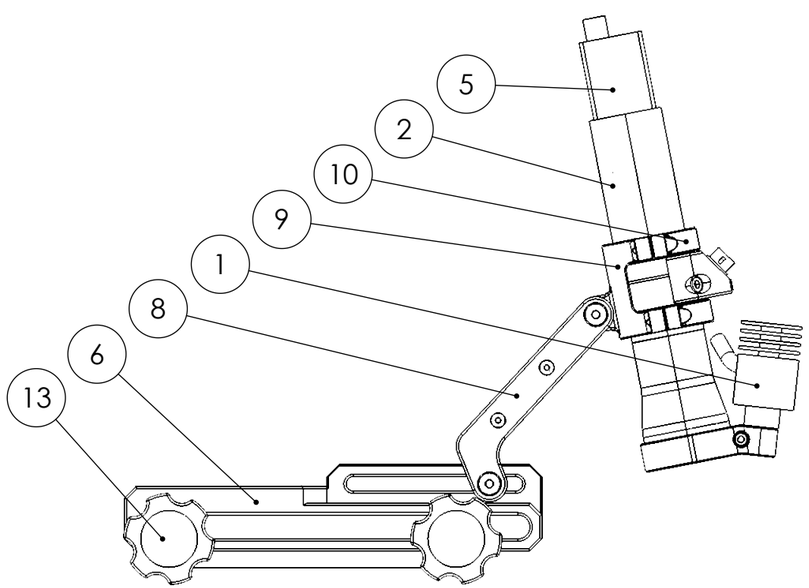


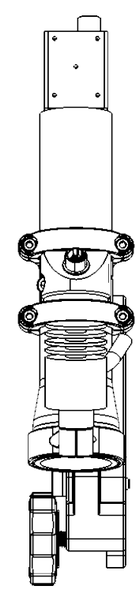

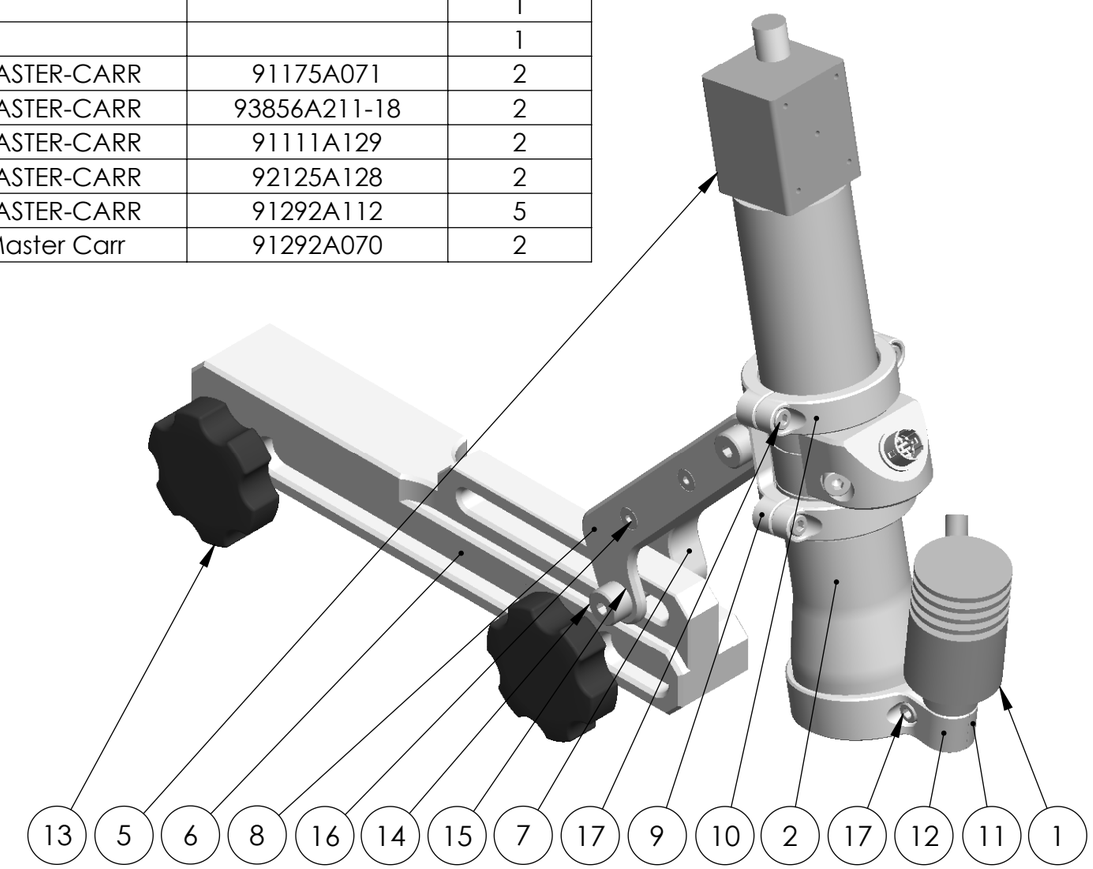


| UNLESS OTHERWISE SPECIFIED: | | NAME | DATE |
|---|---|---|---|
| DIMENSIONS ARE IN MILLIMETERS<br>TOLERANCES<br>ANGULAR: ± .5°<br>ONE PLACE DECIMAL: ± .25<br>TWO PLACE DECIMAL: ± .125 | DRAWN | JHP | 07/12/19 |
| | CHECKED | SM | 07/12/19 |

**PROPRIETARY AND CONFIDENTIAL**
THE INFORMATION CONTAINED IN THIS DRAWING IS THE SOLE PROPERTY OF FIKST. ANY REPRODUCTION IN PART OR AS A WHOLE WITHOUT THE WRITTEN PERMISSION OF FIKST IS PROHIBITED.

MATERIAL
-

FINISH
-

DO NOT SCALE DRAWING | CAD File: 1225-11106

fikst product development

TITLE: Assy, Knife Camera and Mount

| SIZE | PART NO. | REV |
|---|---|---|
| B | 1225-11106 | 01 |

SCALE: 1:2 | SHEET 1 OF 1