ITEM NO.	PART NUMBER	DESCRIPTION	MANUFACTURER	MANUFACTURER P/N	QTY.
1	1225-10971	STAGE MOUNTING PLATE, ATUM	-	-	1
2	1225-10972	CLAMP, ATUM STAGE MOUNTING PLATE	-	-	1
3	1225-11116	SHCS, 6mm X 8 LG, 18-8 SS	MCMASTER CARR	91292A201	4
4	1225-11107	SHCS, 6mm X 14 LG, 18-8 SS	MCMASTER CARR	91292A070	2
5	1225-11117	SHCS, 6mm X 18 LG, 18-8 SS	MCMASTER CARR	91292A136	2

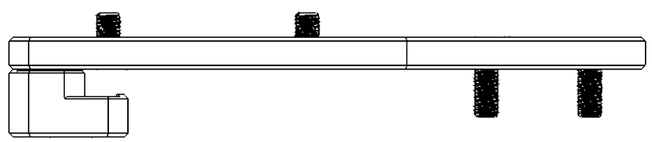

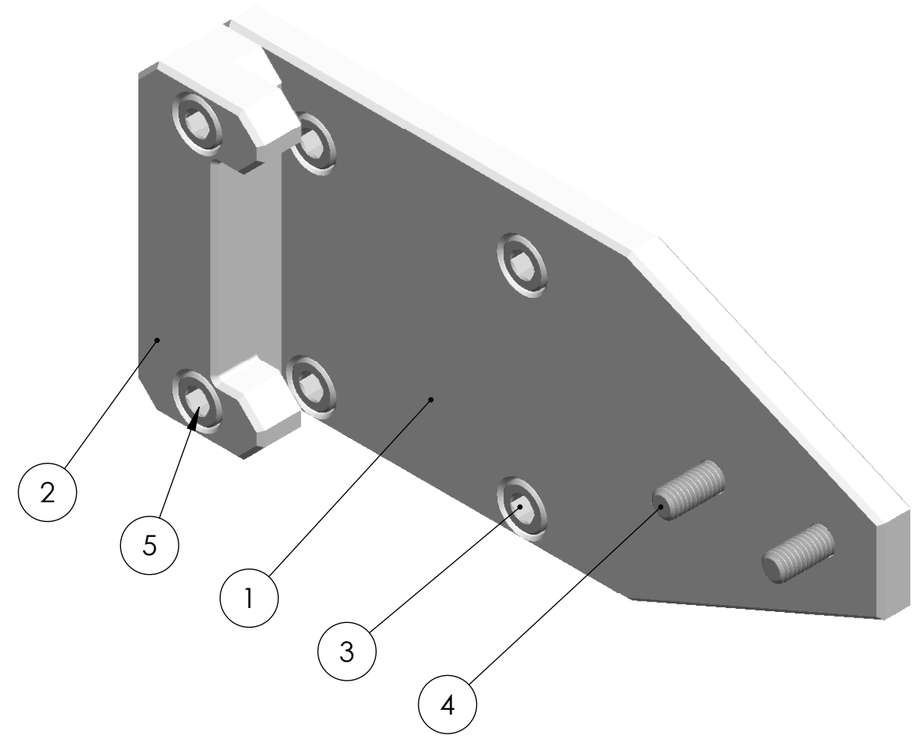

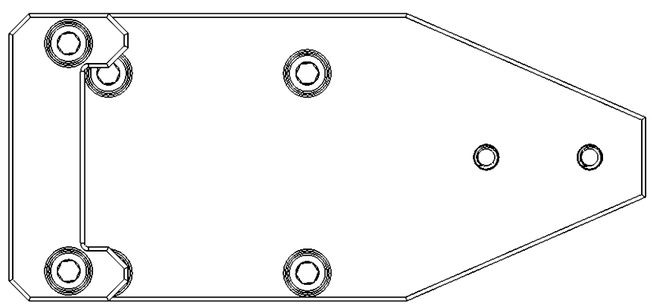

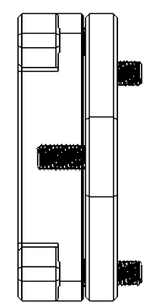

PROPRIETARY AND CONFIDENTIAL
THE INFORMATION CONTAINED IN THIS DRAWING IS THE SOLE PROPERTY OF FIKST. ANY REPRODUCTION IN PART OR AS A WHOLE WITHOUT THE WRITTEN PERMISSION OF FIKST IS PROHIBITED.

UNLESS OTHERWISE SPECIFIED:		NAME	DATE
DIMENSIONS ARE IN MILLIMETERS TOLERANCES ANGULAR: ± .5° ONE PLACE DECIMAL: ± .25 TWO PLACE DECIMAL: ± .125	DRAWN	JHP	07/12/19
	CHECKED	SM	07/12/19

MATERIAL
-

FINISH
-

DO NOT SCALE DRAWING | CAD File: 1225-11115

fikst product development

TITLE: Assy, ATUM Mount

SIZE	PART NO.	REV
B	1225-11115	01

SCALE: 1:1 | SHEET 1 OF 1