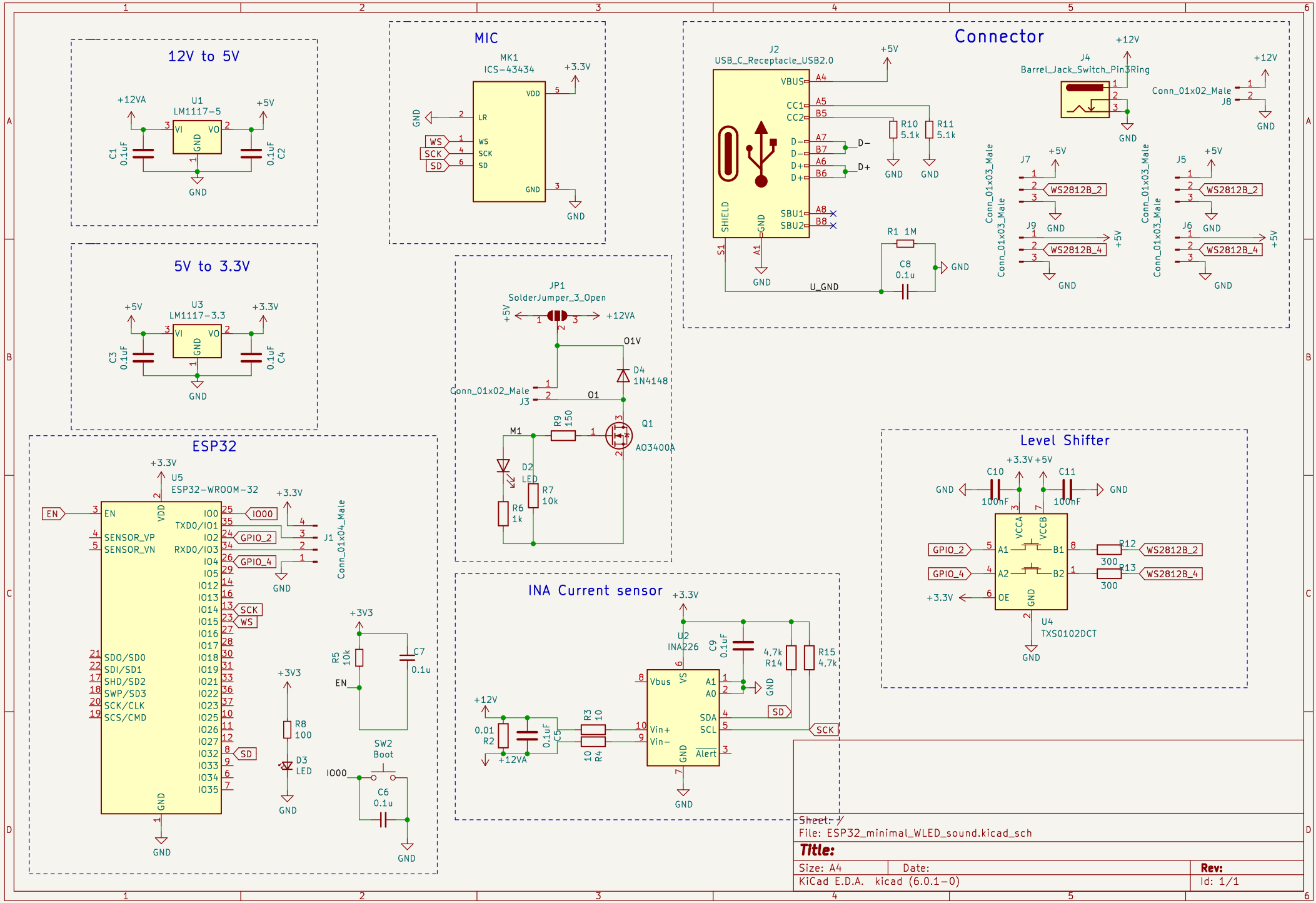
12V to 5V
U1
LM1117-5
+12VA
+5V
C1
0.1uF
C2
0.1uF
GND
MIC
MK1
ICS-43434
+3.3V
VDD
LR
WS
SCK
SD
GND
Connector
J2
USB_C_Receptacle_USB2.0
VBUS
CC1
CC2
D-
D+
SHIELD
SBU1
SBU2
R10
5.1k
R11
5.1k
R1 1M
C8
0.1u
U_GND
J4
Barrel_Jack_Switch_Pin3Ring
+12V
Conn_01x02_Male
J8
J7
J9
J5
J6
Conn_01x03_Male
WS2812B_2
WS2812B_4
5V to 3.3V
U3
LM1117-3.3
C3
0.1uF
C4
0.1uF
JP1
SolderJumper_3_Open
+12VA
O1V
D4
1N4148
Conn_01x02_Male
J3
O1
M1
R9
150
Q1
AO3400A
D2
LED
R7
10k
R6
1k
ESP32
U5
ESP32-WROOM-32
EN
SENSOR_VP
SENSOR_VN
IO0
TXD0/IO1
IO2
RXD0/IO3
IO4
IO5
IO12
IO13
IO14
IO15
IO16
IO17
IO18
IO19
IO21
IO22
IO23
IO25
IO26
IO27
IO32
IO33
IO34
IO35
SDO/SD0
SDI/SD1
SHD/SD2
SWP/SD3
SCK/CLK
SCS/CMD
GPIO_2
GPIO_4
J1
Conn_01x04_Male
R5
10k
C7
0.1u
R8
100
D3
LED
SW2
Boot
C6
0.1u
Level Shifter
C10
100nF
C11
100nF
VCCA
VCCB
A1
A2
B1
B2
OE
R12
300
R13
300
U4
TXS0102DCT
INA Current sensor
U2
INA226
C9
0.1uF
4,7k
R14
R15
4,7k
Vbus
Vin+
Vin-
A1
A0
SDA
SCL
Alert
R2
0.01
C5
0.1uF
R3
10
R4
10
Sheet: /
File: ESP32_minimal_WLED_sound.kicad_sch
Title:
Size: A4
Date:
Rev:
KiCad E.D.A. kicad (6.0.1-0)
Id: 1/1