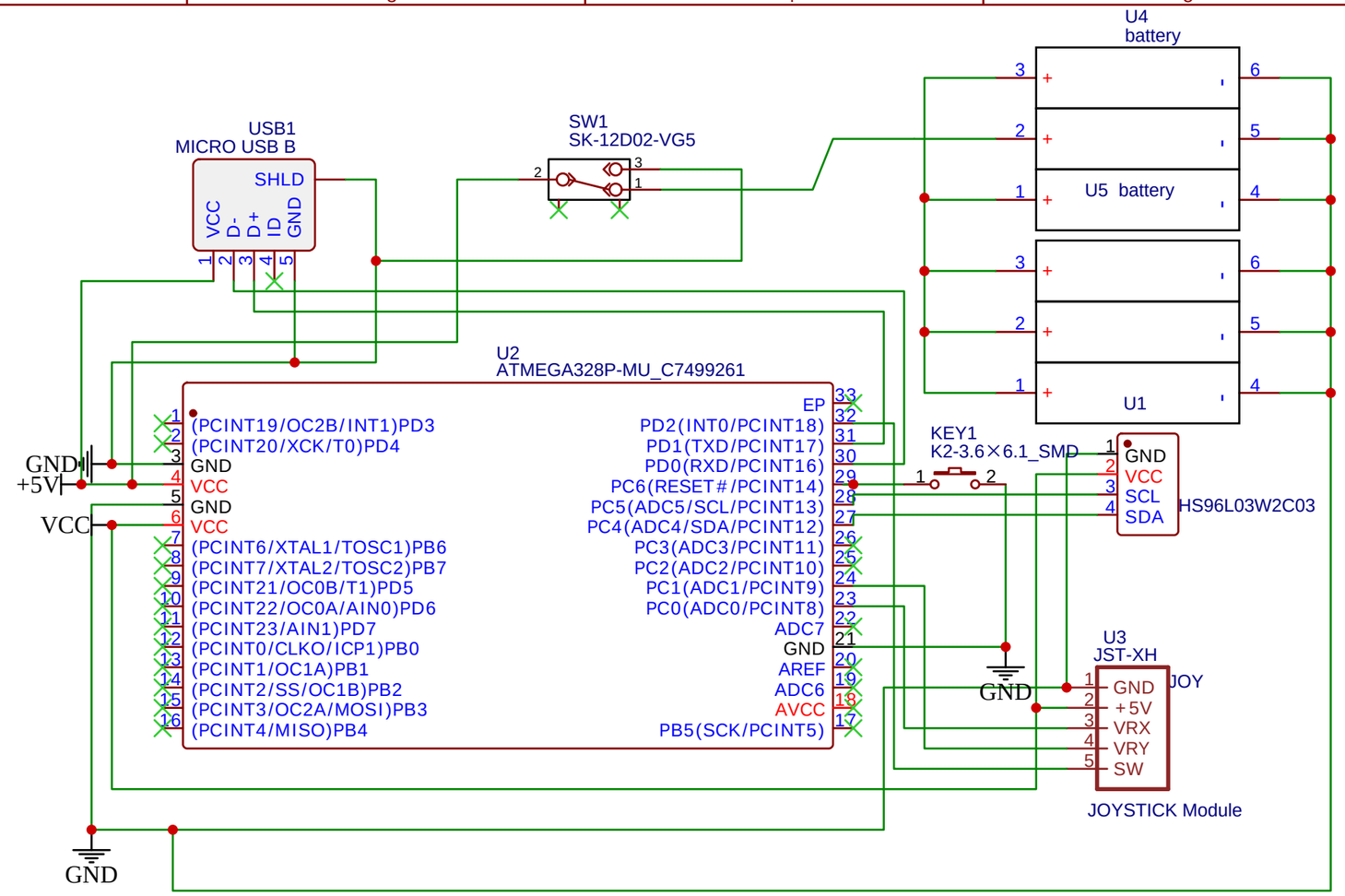

TITLE: Slider Board		REV: 1.0
	Company: Crystal Ice	Sheet: 1/1
	Date: 2024-01-21 Drawn By: Yann Kabambi	