A Configurable Four-State Hybrid PUF Against Machine Learning Attacks

Guangyang Zhang, Houran Ji, Wenbing Fan, and Yao Wang, *Member, IEEE*

***Abstract*—Strong physical unclonable functions (PUFs) are considered the most promising circuits for lightweight Internet of Things (IoT) authentication. However, current white-box attacks on PUF circuits through reverse engineering compromise the effectiveness of many anti-modeling attack techniques. To address this challenge, we propose a configurable four-state hybrid PUF (CF PUF), which includes three strong PUFs and one weak PUF. The proposed structure uses the key stream generated in the weak PUF state to control the configuration state transition sequence of the CF PUF. This approach allows the PUF's challenge-response mapping structure to be dynamically controlled by the unpredictable weak PUF, rather than relying on a fixed PUF structure, thereby providing enhanced resistance to white-box attacks through reverse engineering. To hide the weak PUF characteristics and prevent reverse analysis attackers from using divide-and-conquer methods to break the weak PUF, we employ LUT6_2 resources to embed the weak PUF structure into strong PUFs with minimal hardware overhead. The proposed CF PUF was implemented and evaluated on an Xilinx Artix-7 FPGA hardware platform. Experimental results demonstrate that the proposed solution achieves good prediction resistance, with the best modeling accuracy limited to 54.6% under 1M CRPs across logistic regression (LR), support vector machine (SVM), artificial neural network (ANN), and covariance matrix adaptation evolution strategy (CMA-ES) attacks. Moreover, it maintains good reliability, averaging 98.02% under temperature variations from −20 °C to 80 °C.**

***Index Terms*—Hardware security, modeling attacks, physical unclonable function (PUF).**

I. Introduction

With the continuous expansion of the Internet of Things (IoT), robust identity authentication has become increasingly critical for information security. Traditional encryption algorithms are vulnerable to various physical attacks, posing significant threats to IoT authentication mechanisms. Consequently, it is essential to develop device identity authentication and key-protection schemes that provide strong security while remaining cost-effective in resource-constrained environments [1]. Physical unclonable functions (PUFs) are introduced as a novel security primitive [2]. They generate unique digital fingerprints by exploiting random process variations during chip fabrication, offering advantages such as unclonability, tamper resistance, and lightweight design. PUFs are characterized by challenge-response pairs (CRPs), which define the mapping of inputs to outputs. Therefore, with their inherent lightweight characteristics, PUFs are widely employed for identity authentication in IoT devices, as illustrated in Fig. 1, and their security plays a critical role in maintaining the overall reliability and protection of IoT systems.

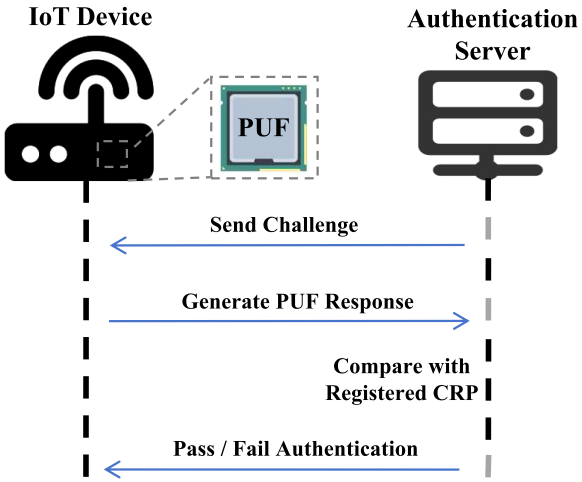

Fig. 1. Applications of PUF in the IoT.

Based on the number of CRPs they can generate, PUFs are classified into weak PUFs and strong PUFs. Weak PUFs generate a limited number of CRPs and are commonly used for key generation, such as SRAM PUF [3], latch-PUF [4], and butterfly PUF [5]. In contrast, strong PUFs possess a large CRP space and are often used for lightweight authentication in IoT devices, such as arbiter PUF (APUF) [1], configurable RO PUF [6], and bistable ring (BR PUF) [7]. Compared to weak PUFs, strong PUFs are more vulnerable to modeling attacks. By collecting a set of known CRPs, attackers can utilize machine learning (ML) algorithms to build mathematical models, enabling accurate prediction of unknown CRPs, which poses severe security risks [8], [9].

In recent years, various studies have proposed improving PUF attack resistance by introducing challenge-response obfuscation [10], [11], [12] or employing hybrid PUF architectures [13], [14], [15]. Wang et al. [13] proposed the dual-mode PUF as a hybrid PUF that uses challenge parity to switch

Received 26 September 2025; accepted 1 November 2025. Date of publication 6 November 2025; date of current version 8 January 2026. This work was supported in part by the Science and Technology Project of Henan Province under Grant 232102211076. *(Corresponding author: Yao Wang.)*

The authors are with the School of Electrical and Information Engineering, Zhengzhou University, Zhengzhou 450001, China (e-mail: ieyaowang@zzu.edu.cn).

Digital Object Identifier 10.1109/JIOT.2025.3630043

2327-4662 © 2025 IEEE. All rights reserved, including rights for text and data mining, and training of artificial intelligence and similar technologies. Personal use is permitted, but republication/redistribution requires IEEE permission.
See https://www.ieee.org/publications/rights/index.html for more information.

Authorized licensed use limited to: Zhengzhou University. Downloaded on January 31,2026 at 04:15:23 UTC from IEEE Xplore. Restrictions apply.

between two modes of the PUF to resist ML attacks. However, the current dual-mode PUF does not fully resist ML attacks. To enhance resistance to ML attacks, Zhang et al. [14] proposed a configurable tristate (CT) PUF that can be flexibly configured as an APUF, configurable RO PUF, and BR PUF through challenge. By XORing the APUF responses with the CRPs of the CT PUF, the attack resistance is improved. However, the CT PUF does not entirely resist modeling attacks under reverse engineering. By reverse analyzing the circuit structure and the original CRP data, an attacker can infer the operating mechanism of the circuit, thereby performing separate modeling attacks on different mode PUFs. Currently, anti-reverse engineering measures mainly involve adding camouflage circuits and self-destruction mechanisms. However, these technologies are difficult to apply to resource-constrained IoT devices.

To resist reverse engineering, several studies have proposed utilizing weak PUFs to generate key streams that encrypt the responses of strong PUFs [11], [16], [17]. This approach requires a large number of additional weak PUF units, which increases the hardware overhead. In addition, the weak PUF array is susceptible to being identified by attackers through reverse engineering and can be compromised using a divide-and-conquer approach. Recently, a featureless dual-mode latch PUF [18] has been proposed to hide PUF characteristics and improve security. However, this method is only applicable to latch-PUF structures and is not flexible enough for other types of PUFs. Therefore, it is crucial to design a PUF that is versatile, does not require an external weak PUF array, and can effectively resist reverse engineering.

In this article, we propose a configurable four-state hybrid PUF (CF PUF), which can be flexibly configured into three strong PUFs and one weak PUF. Furthermore, the key stream generated by the weak PUF dynamically controls the operating mode of the CF PUF to resist white-box attacks after reverse engineering. Since the weak PUF has inherent immunity to ML modeling attacks, we can effectively resist reverse engineering compared to typical hybrid PUFs. In addition, compared to the technique of using an external weak PUF array for encryption to resist reverse engineering [11], [17], we embed the weak PUF structure into the strong PUF delay units, concealing the characteristics of the weak PUF array and enhancing the resistance to reverse engineering. Meanwhile, this method provides a promising solution for protecting various strong PUFs from modeling attacks in reverse engineering scenarios. The main contributions of this article are as follows.

1) We propose a CF PUF, which can be flexibly configured into an APUF, configurable RO PUF, BR PUF, and weak PUF through challenge. The weak PUF is implemented based on the structure of the strong PUF delay units, thereby concealing the weak PUF array and effectively hindering reverse engineering attacks.
2) To address the vulnerability of the CT PUF under reverse engineering, we propose a dynamic obfuscation mechanism. This mechanism uses the key stream generated in the weak PUF mode to control the operating mode of the CF PUF, so that the challenge maps the response through a PUF structure controlled by the key stream, rather than a fixed single structure, thereby hindering reverse engineering attacks.
3) The proposed CF PUF was evaluated on an FPGA platform. The results show that, under a temperature range from −20 °C to 80 °C, the uniqueness of the CF PUF is 49.89%, the uniformity is 49.74%, and the reliability is 98.02%. In addition, we evaluated the resistance of the CF PUF to modeling attacks under white-box attacks. Using the four most popular attack algorithms and up to 1M CRPs, the prediction accuracy of the CF PUF is still below 55%.

The remainder of the article is organized as follows. Section II presents the preliminary. Section III discusses three representative related works. Section IV describes the proposed CF PUF structure and dynamic obfuscation scheme. Section V details the FPGA implementation of the circuit and evaluates the resistance of the CF PUF to modeling attacks. Section VI evaluates the FPGA verification results. Finally, Section VII concludes this article.

II. Preliminary

In this section, we introduce the background information of three representative strong and weak PUFs, and discuss their resilience against modeling attacks.

A. APUF

APUF is a widely studied strong PUF that generates unique responses by exploiting inherent delay variations in digital circuits [10]. Its structure consists of two parallel multiplexers (MUXs) chains controlled by a challenge c, with an arbiter at the end. The challenge bits determine the signal paths through the MUX chains, creating differing delays in the two paths. When a step signal is applied to the input, the arbiter compares the arrival times of the signals from the two paths and outputs a 1-bit response: 1 if the signal in the upper path arrives first, or 0 if the lower path is faster. These delay differences arise from manufacturing process variations (e.g., transistor threshold voltage and wire width deviations), ensuring the uniqueness of each APUF. However, due to the linear relationship between challenges and responses, APUFs are vulnerable to ML attacks: an attacker can use a small set of CRPs to build an accurate model, predict responses to unseen challenges, and clone the PUF's behavior.

In a conventional APUF, the propagation path in stage i is determined by the challenge bit c_i. For stage i, there are four paths defined as q, p, u, and v. When $c_i = 0$, the signal propagates in parallel paths, and the delay difference between the two symmetric circuits is defined as δ_i^0; when $c_i = 1$, the signal propagates in crossed paths, and the delay difference is defined as δ_i^1. The delay differences δ_i^0 and δ_i^1 can be formulated as

$$\begin{aligned} \delta_i^0 &= p_i - q_i \\ \delta_i^1 &= u_i - v_i. \end{aligned} \tag{1}$$

Define Δt_i as the cumulative delay difference up to stage i. Based on this definition, we can derive the following equation.

$$\Delta t_i = (1 - 2c_i) \cdot \Delta t_{i-1} + (1 - c_i) \cdot \delta_i^0 + c_i \cdot \delta_i^1. \tag{2}$$

Authorized licensed use limited to: Zhengzhou University. Downloaded on January 31,2026 at 04:15:23 UTC from IEEE Xplore. Restrictions apply.

Consequently, the final delay difference $\Delta t_n - 1$ can be represented as

$$\Delta t_{n-1} = \Omega \cdot \Phi(C) \tag{3}$$

where the delay vector is $\Omega = (\omega_0, \omega_1, \ldots, \omega_n)$, the parameters of which are given by

$$\begin{aligned} \omega_0 &= \frac{\delta_0^0 - \delta_0^1}{2} \\ \omega_n &= \frac{\delta_{n-1}^0 + \delta_{n-1}^1}{2} \\ \omega_i &= \frac{\delta_{i-1}^0 + \delta_{i-1}^1 + \delta_i^0 - \delta_i^1}{2} \end{aligned} \tag{4}$$

where the feature vector $\Phi(C)$ denotes the characteristics derived from the n-bit input challenge, $\Phi(C) = (\phi_1(C), \phi_2(C), \ldots, \phi_k(C), 1)^T$, with $\phi_i(C) = \prod_{j=i}^{k}(1 - 2c_j)$.

The response of the APUF can be further formulated as

$$r = \boldsymbol{\varepsilon}(\Delta t_{n-1}) \tag{5}$$

where $\boldsymbol{\varepsilon}$ denotes the Heaviside step function, i.e., $\boldsymbol{\varepsilon}(\Delta t_{n-1}) = 0$ if $\Delta t_{n-1} < 0$ and $\boldsymbol{\varepsilon}(\Delta t_{n-1}) = 1$ if $\Delta t_{n-1} > 0$.

B. Configurable RO PUF

The traditional RO PUF utilizes the delay difference of two RO chains formed with an odd number of inverters to generate a 1-bit response [10]. Compared to traditional RO PUFs, which have a smaller CRP space, the configurable RO PUF expands the CRP space by allowing the inclusion or exclusion of inverters in the RO chain, thereby generating different response results. The frequency difference between the upper and lower RO paths can be represented by the delay difference, where $d_{\text{inv1}}(i)$ and $d_{\text{inv2}}(i)$ denote the delays of the first inverters in the upper and lower RO paths, respectively. Therefore, the total delay difference between the two paths is denoted as ΔD, and the expression is as follows:

$$\Delta D = \sum_{i=1}^{n} (d_{\text{inv1}}(i) - d_{\text{inv2}}(i)) \times C \tag{6}$$

where C is the challenge. Since the delay is inversely proportional to the challenge, when $\Delta D \geq 0$, the configurable response is 0; conversely, when $\Delta D < 0$, the configurable RO PUF response is 1. However, this enables the mapping relationship of the CRPs of the configurable RO PUF to be modeled as a linear function, making it vulnerable to modeling attacks.

C. BR PUF

BR PUF is a type of strong PUF that utilizes the unique physical characteristics of ring oscillators to generate responses [7]. In a BR PUF, an even number of inverters is connected to form a ring oscillator. When powered up, the ring oscillator can settle into one of two stable states because of the inherent process variations in the manufacturing process. The state between two adjacent inverters in the ring can be output as a 1-bit response. This mechanism leverages the metastable behavior of the ring oscillator to generate a unique response for each challenge. However, research [19] has shown that the relationship between challenge and response in BR PUF can be easily modeled using ML techniques.

D. Weak PUFs

SRAM PUF [20] is a classic example of a weak PUF, with its core consisting of a cross-coupled circuit formed by two inverters. When the circuit is powered on, due to manufacturing process variations, it transitions from a metastable state to one of two stable states. Weak PUFs generate fewer CRPs and are difficult to model using linear functions, making them inherently more immune than strong PUFs. Although this is a practical structure for implementing PUFs on FPGAs, its main disadvantage is that SRAM memories in most FPGAs are forcibly set to a known state upon start-up. To address this, butterfly PUF was proposed, which utilizes latches in FPGAs to construct a cross-coupled loop that simulates SRAM cells [5].

III. Related Work

This section reviews PUF security measures, including defenses against modeling attacks and reverse engineering. Recent methods to strengthen strong PUFs against ML attacks can be categorized into two main approaches: CRP obfuscation and hybrid PUF. However, advances in reverse engineering allow attackers to extract circuit-level information, weakening many existing defenses. To address this, recent studies propose PUF-based anti-reverse engineering techniques, such as integrating weak PUF arrays to generate strong responses [11], [21] or concealing PUF-specific features to resist structural disclosure [18].

A. CRP Obfuscation

Obfuscation can be achieved by hiding the mapping relationship of CRPs, preventing attackers from obtaining sufficient valid CRPs to model strong PUFs [22]. XOR APUF [10] is the most common approach for introducing nonlinear elements to obfuscate responses. It XORs multiple parallel APUF response bits together to form a response bit of the XOR APUF. Since its introduction in 2007, XOR APUF has been regarded as a promising solution for designing security-strong PUFs. However, Becker [23] proposed a reliability-based ML modeling attack, which was experimentally demonstrated to be effective against XOR APUF. Furthermore, some studies have aimed to enhance the security of XOR APUF by increasing the number of APUFs within the XOR structure. For example, a (n, k)-XOR APUF consists of k parallel and identical APUFs, each comprising n delay stages. It should be noted that the security of this approach is highly dependent on the value of k. However, increasing k reduces the reliability of the PUF, thereby limiting the robustness of the (n, k)-XOR APUF against more advanced modeling attacks [24]. The MPUF was proposed to address the reliability issues introduced by XOR while enhancing security by utilizing MUXs [25]. However, the variant rMPUF, which improves resistance against reliability-based modeling attacks, requires each submultiplexer to be equipped with a separate APUF. Although this improves resistance to ML attacks, it significantly increases hardware overhead. In [26], FLAM-PUF, a lightweight PUF based on response feedback, was proposed. This design achieves challenge obfuscation by XORing the response of the previous

Authorized licensed use limited to: Zhengzhou University. Downloaded on January 31,2026 at 04:15:23 UTC from IEEE Xplore. Restrictions apply.

APUF round with the taps of a Galois linear-feedback shift register (LFSR), generating the final response through multiple iterations. However, Chen et al. [27]. introduced a security evaluation method of PUF based on the mimic attack and the probably approximately correct (PAC) theory. By designing an attack model tailored to a specific PUF and conducting white-box attacks, the method successfully predicted the behavior of 20 types of PUFs. The results indicate that this approach can effectively compromise the majority of existing defense mechanisms.

B. Hybrid PUF

A hybrid PUF combines two or more PUFs, typically using the output of one PUF as the input to another, thereby obfuscating the excitation method. Wang et al. [13] proposed a dual-mode PUF combining BR PUF and RO PUF, which utilizes the parity of the number of inverters to switch between the two PUF modes. To resist ML-based attacks, the design incorporates a challenge obfuscation structure and a challenge masking mechanism. Although it demonstrates some resistance against logistic regression (LR) and support vector machine (SVM)-based attacks, it remains vulnerable to artificial neural network (ANN)-based modeling attacks. To address this issue, Zhang et al. [14] proposed a CT PUF capable of flexibly switching between APUF, configurable RO PUF, and BR PUF modes. The design employs a bitwise XOR mechanism, where the CRPs generated in APUF mode are XORed with the responses from other modes to produce the final response. This method obfuscates the relationship between challenges and responses, significantly enhancing the PUF's resistance to ML-based modeling attacks. Unfortunately, the security of PUFs that are resistant to modeling attacks is still threatened by reverse engineering. Attackers can first acquire the complete chip layout using reverse engineering techniques and then identify modules with unique layout characteristics, allowing them to easily locate potential PUF circuits [28], [29]. Once the PUF circuitry is identified, attackers can apply circuit analysis methods to obtain the complete structural design and infer its operation. Therefore, enhancing the resistance of PUFs against reverse engineering attacks is critically essential.

C. PUF-Based Anti-Reverse Engineering Techniques

Weak PUFs are inherently immune to modeling attacks because each weak PUF cell is independent of the others and exhibits no correlation. Therefore, some studies utilize weak PUFs to assist strong PUFs in achieving resistance against reverse engineering. For instance, Liu et al. [16] proposed the use of external weak PUF arrays to configure specific PRNG devices to generate key streams, which are then used to encrypt the keys of strong PUFs, thus enhancing security. In addition, to prevent the OIT model in SOI PUFs from being compromised through reverse engineering, the concept of the cSOI PUF was introduced [11]. This approach utilizes weak PUFs and TRNGs to obscure the input challenge. However, the use of external weak PUF arrays increases additional hardware overhead, and a large number of weak PUF arrays may allow attackers to more easily identify the obfuscation method, even providing directions for the attack. Furthermore, some studies have proposed enhancing resistance to reverse engineering by hiding PUF characteristics [18]. Still, this approach is only applicable to latch-based PUFs and lacks general applicability to previously proposed strong PUFs with anti-attack capabilities.

IV. Proposed Method

This section first introduces the circuit structure and the operation states of the CF PUF. Then, we analyze the vulnerability of CT PUF to modeling attacks in the context of reverse engineering, and based on this, propose a new dynamic obfuscation mechanism to enhance the resistance of PUF against reverse engineering attacks. Finally, we evaluate the security of CF PUF through mathematical analysis.

A. Structure of CF PUF

The circuit structure of the proposed CF PUF is shown in Fig. 2. It primarily comprises three modules: the PUF state control unit, configurable delay units, and the response generation unit. This circuit configures different PUF states through various excitation modes, utilizing the configurable delay units. The configurability of these delay units is implemented using XOR gates and MUXs. The XOR gate is configured by the C_x signal, which determines whether an inverter exists in the circuit. When $C_x = 1$, the XOR gate operates in inverter mode; when $C_x = 0$, it operates in buffer mode. The white MUX is controlled by the Cs signal and determines whether the output of each configurable delay unit is fed back to its input. When $C_S = 0$, the output of the current stage is fed back to the input of the same stage; when $C_S = 1$, the output signal is passed to the next delay unit. The blue MUX is controlled by the Cm signal and determines whether the signal is transmitted along the original path. When $C_m = 0$, the signal path remains unchanged; when $C_m = 1$, the signal path changes. Finally, the response is generated based on the CF PUF's operational state through the arbitration unit, frequency counter, and status register located at the tail of the circuit.

The proposed structure can be flexibly configured as either a strong PUF or a weak PUF mode, with its operational state diagram shown in Fig. 3. Specifically, when $C_S = 0$, the PUF circuit operates in weak PUF mode, as shown in Fig. 4(d). In this mode, the output of each delay unit is fed back to its input, and when $C_x = 1$, the XOR gate operates in inverter mode, causing each delay unit to form a bistable circuit. During power-up initialization, inherent manufacturing variations cause these bistable circuits to transition from an unstable state to a random stable state (either 0 or 1). However, different delay paths can be selected through the C_m signal in the bistable circuit, leading the circuit to tend toward different stable values, thus generating n independent configurable SRAM units. When $C_s = 1$, the CF PUF is configured to operate in strong PUF mode, where signals are transmitted within the delay units. Depending on the parity of the number of "1" in the C_x and C_m signals, the CF PUF can be configured as an APUF, configurable RO PUF, or BR PUF.

Authorized licensed use limited to: Zhengzhou University. Downloaded on January 31,2026 at 04:15:23 UTC from IEEE Xplore. Restrictions apply.

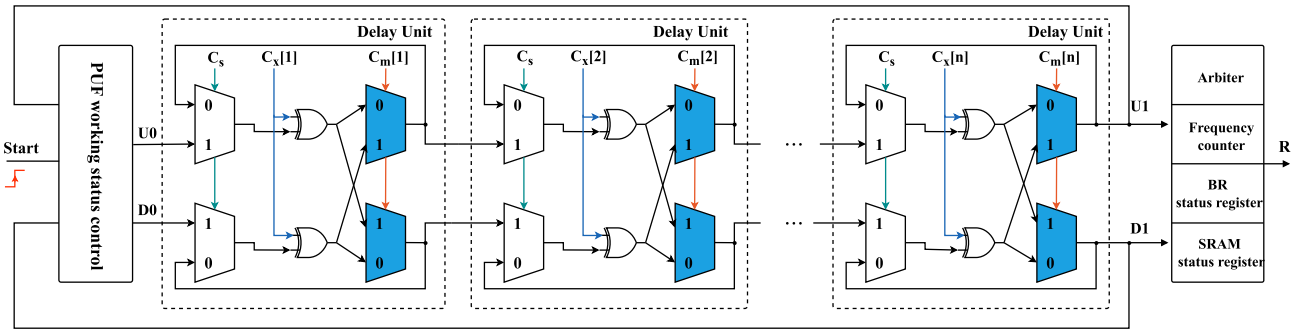

Fig. 2. Circuit architecture of an n-stage CF PUF design.

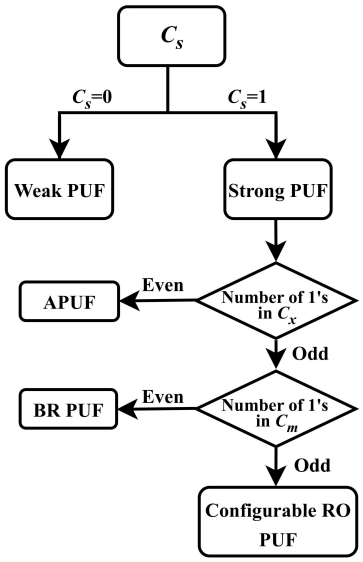

Fig. 3. Working states of n-stage CF PUF.

1) APUF: In this mode, when the number of "1" in the C_x signal is even, the logical value of the signal transmitted along the delay path remains unchanged, and the XOR gate acts as a buffer. Under different C_m signals, the delay signal is transmitted through different paths to the arbiter unit, and the output response is generated based on the differences between the upper and lower paths, as shown in Fig. 4(a).

2) Configurable RO PUF: When the number of "1" in the configuration signal C_x is odd, the XOR gates in the circuit are configured as inverters, causing the logical value of the transmitted signal to flip from start to finish along the delay path. In this case, depending on the parity of the number of "1" in the C_m signal, the CF PUF can be configured as either an RO PUF or a BR PUF. Specifically, when the number of "1" in the C_m signal is even, as shown in the control logic diagram, the upper output $U1$ is connected to the upper input $U0$, and the lower output $D1$ is connected to the lower input $D0$, forming two independent ring oscillator circuits. By varying the C_m signal, the two independent RO circuits have different oscillation frequencies. Finally, the frequencies of the two RO circuits are counted and compared using a frequency counter to generate the output response, as shown in Fig. 4(b).

3) BR PUF: When the number of "1" in the C_m signal is odd, as shown in the control logic diagram, the upper output $U1$ is connected to the lower input $D0$, and the lower output $D1$ is connected to the upper input $U0$, causing the two independent ring oscillator circuits to be connected end-to-end, ultimately forming a stable circuit with an even number of inverters, as shown in Fig. 4(c).

B. Vulnerability Analysis of CT PUF Under Reverse Engineering Attacks

CT PUF performs an XOR operation on the challenge and response of a three-state PUF through APUF, thus increasing the difficulty for attackers to conduct modeling attacks. However, due to the current threat of reverse engineering to extract the circuit structure, we analyze the potential risk of modeling attacks on CT PUF under the assumption that an attacker has access to both the circuit design and the original CRPs. Assume that the attacker can collect CRP data, which includes the values C_{arbiter}, C_{ct}, and R_{ct}. By analyzing the CT PUF state diagram, it is observed that the odd-numbered bits in the C_{arbiter} data are all zeros. Combined with the structural diagram of the CT PUF, it can be inferred that, under this challenge, the PUF chain does not contain inverters and consists solely of two symmetric links and an n-stage MUX. As a result, the attacker could deduce that the PUF is operating in the APUF mode. In the following, this article will present an algorithm to verify the correctness of this hypothesis.

Algorithm 1 Modeling Attack on the APUF in CT PUF

Input: $C_{arbiter}, C_{ct}$ and R_{ct}

Output: Obtain a ω such that $R_{ct} = R^{(\omega)}_{arbiter} \oplus R^{(\omega)}_{xor}$

Step 1: Initialize APUF Parameters w randomly

Predict: $R^{(w)}_{arbiter} = \varepsilon(w^T \cdot \Phi(C_{arbiter}))$

Step 2: Construct Loss Function

Derive: $C^{(w)}_{xor} = C_{arbiter} \oplus R^{(w)}_{arbiter}$

Select $C^{(w)}_{xor_a}$ from $C^{(w)}_{xor}$

Predict: $R^{(w)}_{xor_a}$ = Tristate PUF($C^{(w)}_{xor_a}$)

Derive: $R^{(w)}_{ct} = R^{(w)}_{arbiter} \oplus R^{(w)}_{xor_a}$

Define the loss function $L(w)$ as:

$L(w) = \sum_i \text{Loss}(R^{(w)}_{cti}, R_{cti})$

Step 3: Compute Loss Function

$w = \text{optimize}(L(w))$

Authorized licensed use limited to: Zhengzhou University. Downloaded on January 31,2026 at 04:15:23 UTC from IEEE Xplore. Restrictions apply.

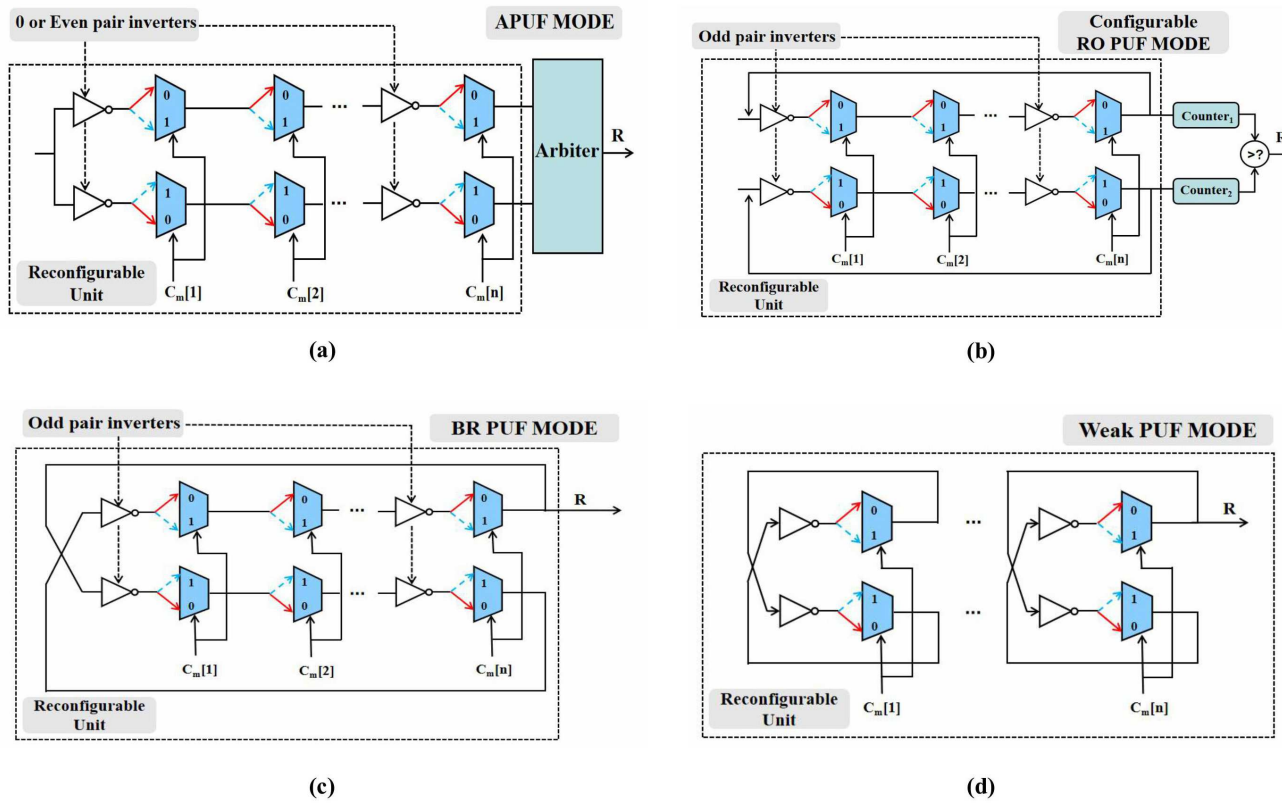

Fig. 4. (a) Structural principle of the APUF mode. (b) Structural principle of the configurable RO PUF mode. (c) Structural principle of the BR PUF mode. (d) Structural principle of the SRAM PUF mode.

Where $R^{(w)}_{\text{arbiter}}$ denotes the response of the APUF under a random parameter model. Based on the obfuscation structure, the corresponding challenge $C^{(w)}_{\text{XOR}}$ is derived, from which the challenges operating in APUF mode are extracted and denoted as $C^{(w)}_{\text{XOR}_a}$, yielding the corresponding responses $R^{(w)}_{\text{XOR}_a}$. Subsequently, the response $R^{(w)}_{\text{ct}}$ is computed via an XOR operation. Finally, the Hamming loss function is employed, and the optimal parameter vector w is obtained using the covariance matrix adaptation evolution strategy (CMA-ES) optimization algorithm to achieve model convergence. The core idea of Algorithm 1 is to construct an APUF model based on the known circuit structure and train the parameter vector w in the APUF mode using the actual CT PUF responses R_{ct} so that the model output gradually approximates the real responses. Once the model can accurately predict the CRPs of the APUF embedded in the CT PUF, both C_{XOR} and R_{XOR} can be reconstructed. Furthermore, the CRPs corresponding to the APUF mode can be separated from the reconstructed data. At this point, the tristate PUF can be regarded as a dual-mode PUF. For dual-mode PUF, it has been demonstrated in CT PUF that an effective modeling approach is to apply a divide-and-conquer strategy in combination with ANNs. Therefore, once the CRPs are successfully recovered in the APUF mode, the CT PUF becomes vulnerable to successful modeling attacks.

C. Dynamic Obfuscation Scheme for CF PUF

To address the vulnerability of PUF to modeling attacks in reverse engineering environments, we propose an obfuscation method that dynamically switches among multiple PUF modes by generating random control signals using a weak PUF. As illustrated in Fig. 5, the obfuscation process can be divided into two main steps.

1) *Key Generation via Weak PUF as Control Signals:* Initially, the C_s signal is set to 0, and the signals C_x are driven to a high level of logic. Under this condition, all XOR gates are configured to operate in inverter mode. Consequently, the circuit is configured as a weak PUF. After the weak PUF reaches a stable state, the response is captured and stored, denoted R_{weak}.
2) *Strong PUF Operation Mode:* After the response of the weak PUF is acquired, the C_s signal is set to 1, and the CF PUF is switched to the strong PUF operation mode. Specific bits of the stored R_{weak}, namely, $R_{\text{weak}}[0, 1]$, $R_{\text{weak}}[10, 11]$, $R_{\text{weak}}[20, 21]$, and $R_{\text{weak}}[30, 31]$, are selected as control signals to determine the sequence of PUF operations. The control signal Ctrl is encoded as follows: "01" indicates that the configurable RO PUF is operated to generate a single response bit, "10" corresponds to the BR PUF operation, "11" to the APUF operation, and "00" to the output obtained by bitwise XOR of the weak PUF response.

It should be noted that during PUF operation, challenge signals C_x and C_m must be checked to ensure compliance with the requirements of the corresponding PUF mode. If the conditions are not satisfied, the number of ones in the challenge data should be adjusted to meet the operational constraints of the selected mode. Therefore, the final response of the CF PUF is generated by a specific PUF mode configured by the control signal Ctrl.

Authorized licensed use limited to: Zhengzhou University. Downloaded on January 31,2026 at 04:15:23 UTC from IEEE Xplore. Restrictions apply.

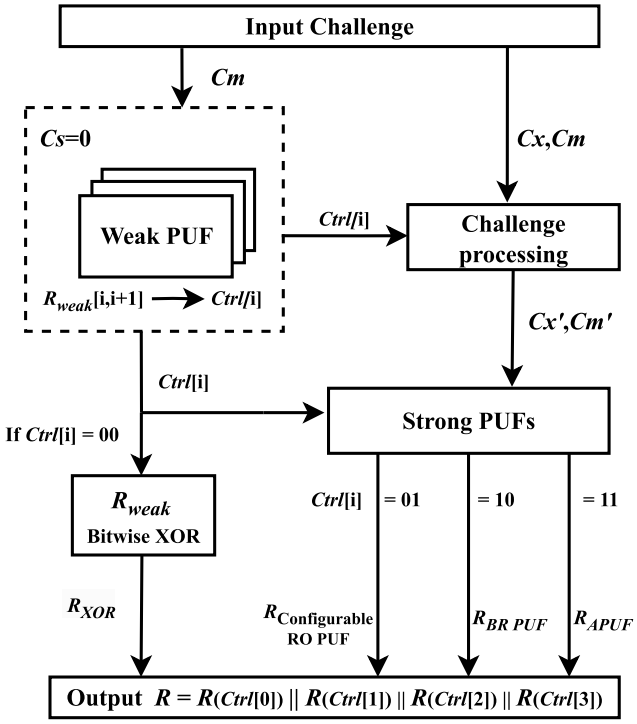

Fig. 5. Bitwise XOR obfuscation mechanism.

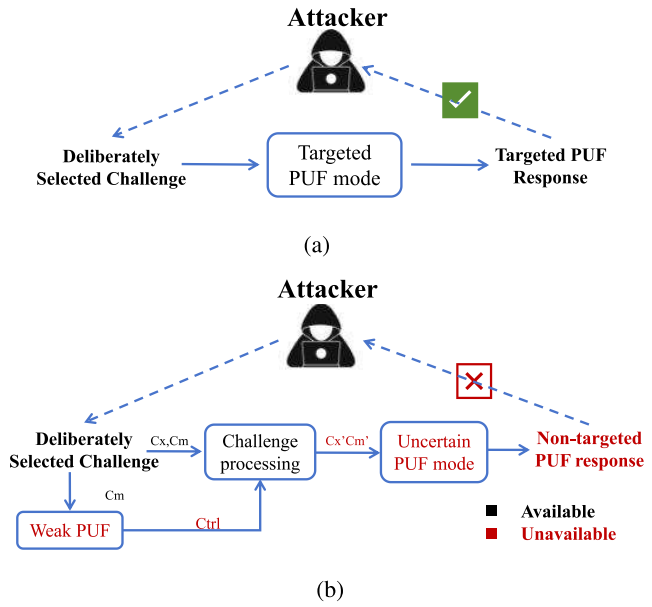

Fig. 6. Divide-and-conquer attack model on configurable PUFs. (a) Traditional configurable PUFs. (b) CF PUF.

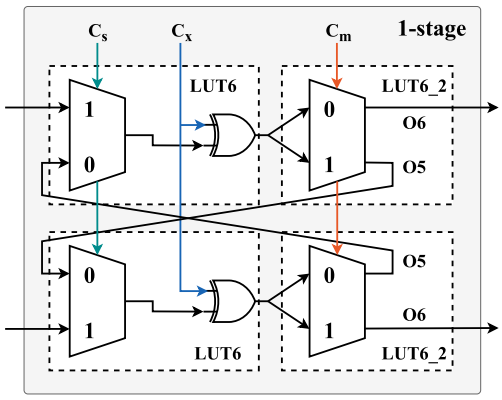

Fig. 7. Implementation of a 1-stage delay unit in the CF PUF core on FPGAs.

D. Security Analysis

For traditional configurable PUFs, they are vulnerable to divide-and-conquer attacks once an attacker gains knowledge of the circuit structure through reverse engineering. As shown in Fig. 6(a), an attacker could configure the target PUF mode by deliberately selected challenge and collecting the generated responses, thereby performing modeling attacks on different PUF modes.

In contrast, the CF PUF proposed in this article effectively resists such attacks. As shown in Fig. 6(b), the PUF mode in CF PUF is not directly controlled by external challenges; instead, it is controlled by the signal Ctrl, which is the response generated by an embedded weak PUF. The challenge processing module ensures that the external input challenges satisfy the parity constraints of the corresponding PUF mode, guaranteeing its correct operation. Consequently, in the absence of the Ctrl signal, the attacker cannot accurately configure the PUF mode through external challenges. Moreover, in CF PUF, the response to a single challenge is derived from a combination of outputs from multiple PUF modes rather than from a single mode. Embedding the weak PUF structure within the strong PUF delay units and encrypting the operation of the strong PUF mode with the response from the weak PUF. This design renders reverse engineering and divide-and-conquer attacks ineffective. Even with substantial CRP data and detailed circuit information, attackers cannot establish a mapping between challenge and targeted PUF modes. Consequently, the proposed architecture offers robust resistance to reverse engineering and modeling attacks.

V. Implementation and Security Analysis of CF PUF

In this section, we present the detailed implementation of the CF PUF on an FPGA. The robustness of CF PUF against modeling attacks will be evaluated using four different ML algorithms, and its security will be discussed.

A. Implementation of Combined Strong and Weak PUFs

In traditional implementations of combined strong and weak PUFs, the weak PUF array is typically externally linked [11], [30], [31], or the weak PUF is used to obfuscate the strong PUF through a communication protocol [16]. This obfuscation mechanism increases the overall hardware overhead and complexity of the system. This design will implement a hybrid PUF with strong and weak features on the Xilinx Artix-7 XC7A100T FPGAs.

The weak PUF implementation in this article is based on the circuit structure proposed in [32], utilizing two XOR gates

Authorized licensed use limited to: Zhengzhou University. Downloaded on January 31,2026 at 04:15:23 UTC from IEEE Xplore. Restrictions apply.

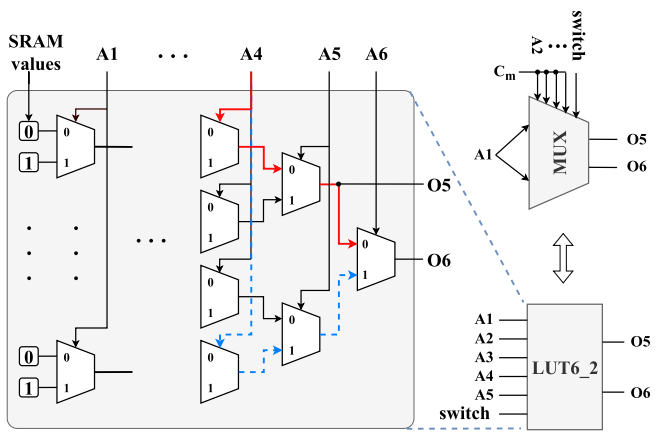

Fig. 8. Internal structure of a six-input and two-output LUT.

cross-coupled. When C_x is 1, the XOR gates are equivalent to inverter states. When C_s is 0, the two XOR gates are connected end-to-end, forming a bistable ring structure. Similar to SRAM cells, the output generated depends on the mismatch and delay differences between the two symmetric branches. In this article, to save hardware resource overhead, the same configurable delay unit is shared between the weak PUF and strong PUF modes, as shown in Fig. 7. However, in the strong PUF mode, where delay units are required to work in a cascaded fashion, this affects the independence of SRAM cells in the weak PUF mode, leading to unstable output responses. To overcome this limitation, the design leverages the dual-output port capability of the FPGA's internal LUT6_2 resources, maintaining the independence of each bistable ring in weak PUF mode. As illustrated in Fig. 8, LUT6_2 resources are similar to standard LUT6 elements but feature two independent output ports, O5 and O6. In the strong PUF configuration, the switch is set to 0, and delay signals are transmitted through the O6 port, facilitating the propagation of timing signals across cascaded delay units. In contrast, for the weak PUF configuration, the switch is set to 1, where each delay unit loops back its output from the O5 port to its input, while the O6 output is grounded, thus ensuring closed-loop bistability. Therefore, to ensure the independence of multiple bistable rings, the initial value of the SRAM storage units inside LUT6_2 must be set to 64'h0000_cccc. In the configurable delay unit, only the MUX controlled by C_m is implemented using the LUT6_2 resource inside the FPGA, while other components use LUT6 resources.

Furthermore, the reliability of the weak PUF response is crucial as it serves as the key for controlling the circuit's operation. Since the response of weak PUF can be influenced by the Cm excitation signal, approximately 8.9% of unreliable CRPs were discarded to improve its reliability, resulting in a 99.9% reliable weak PUF response.

B. Noncross-Equivalence

Since the design includes APUF in the strong PUF mode, path symmetry must be considered in the FPGA implementation. However, implementing a traditional APUF with cross-path transmission on an FPGA can adversely affect the symmetry of the upper and lower paths during placement and routing. To alleviate delay bias, the design adopts programmable delay lines to construct an equivalent noncrossing path solution [33], [34]. As illustrated in Fig. 8, the red and blue arrows represent signal transmission paths with the maximum and minimum delays, respectively. For instance, when $A_2A_3A_4A_5A_6$ is set to "11111," the MUX-gated signal propagates along the blue path, whereas when $A_2A_3A_4A_5A_6$ is "00000," the signal follows the red path. In the configurable RO PUF mode, the circuit consists of two parallel ring oscillators operating independently. Upon switching to the BR PUF mode, these two parallel paths are reconfigured into a single oscillation loop. By leveraging noncrossing paths, the BR PUF initially retains parallel and independent oscillation structures, similar to the RO PUF. To enable seamless mode transition, a state control mechanism is introduced, where the value of C_m is used to distinguish between RO and BR operating modes. Specifically, in the BR PUF mode, the upper and lower oscillation paths are connected end-to-end, forming a unified loop with an even number of inverters.

C. Modeling Attacks Based on ML

This article presents attack tests using two distinct attacker models. In the first model, the attacker has access only to the raw CRP data of the PUF and performs a black-box attack. In the second model, the attacker employs reverse engineering techniques to obtain detailed information about the PUF circuit, the original CRP data, and other key elements, thereby conducting a white-box attack. Using these two models, we evaluate the APUF, 4XOR APUF, dual-mode PUF, and the proposed CF PUF with four ML algorithms. A dataset of 1 million CRPs is used, with 80% allocated for training and 20% for testing. The results of the black-box attacks are presented in Fig. 9, and the results of the white-box attacks are shown in Fig. 10.

1) *Resistance of LR:* LR is a supervised learning method used for binary classification, which maps the output of a linear model to probability values in the range [0, 1] and optimizes parameters using maximum likelihood estimation. In [8], the authors demonstrate that the effectiveness of LR in attacking APUF and XOR PUF is comparable to that of SVM. The results of the black-box attack are presented in Fig. 9. Using 1k CRP pairs, LR achieves a prediction accuracy of 95%. However, for the dual-mode PUF and 4XOR APUF, even with 1 million CRP pairs, the prediction accuracy remains approximately 50%. In the black-box attack model, LR encounters difficulties in predicting nonlinear structures. In contrast, in the white-box attack model, with 1 million CRP pairs, LR achieves a prediction accuracy of 80% for the dual-mode PUF, but only around 55% for the 4XOR APUF and CF PUF, as shown in Fig. 10. These results demonstrate that the nonlinear 4XOR APUF and CF PUF exhibit significant robustness against LR-based modeling attacks.
2) *Resistance of SVM:* SVM is a classification algorithm based on maximizing the margin, aiming to find a hyperplane that maximizes the separation between classes. By

Authorized licensed use limited to: Zhengzhou University. Downloaded on January 31,2026 at 04:15:23 UTC from IEEE Xplore. Restrictions apply.

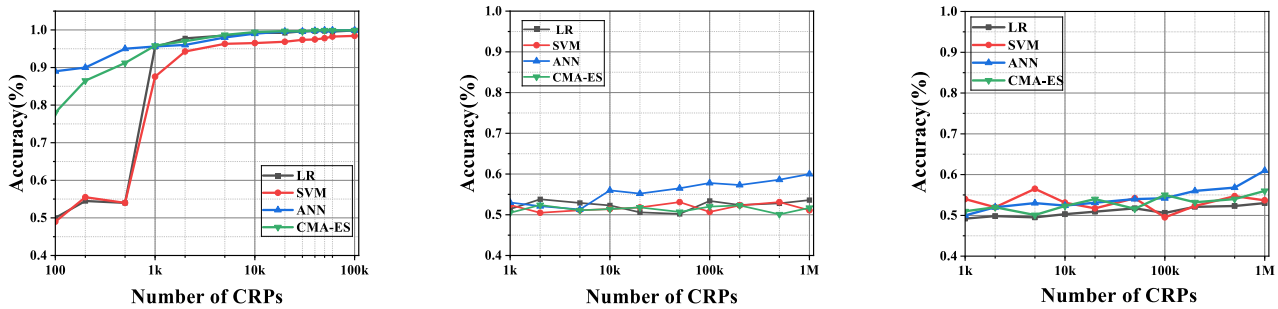

(a) (b) (c)

Fig. 9. Resistance of PUFs under four ML-based black-box attacks: (a) APUF, (b) dual-mode PUF, and (c) 4XOR APUF.

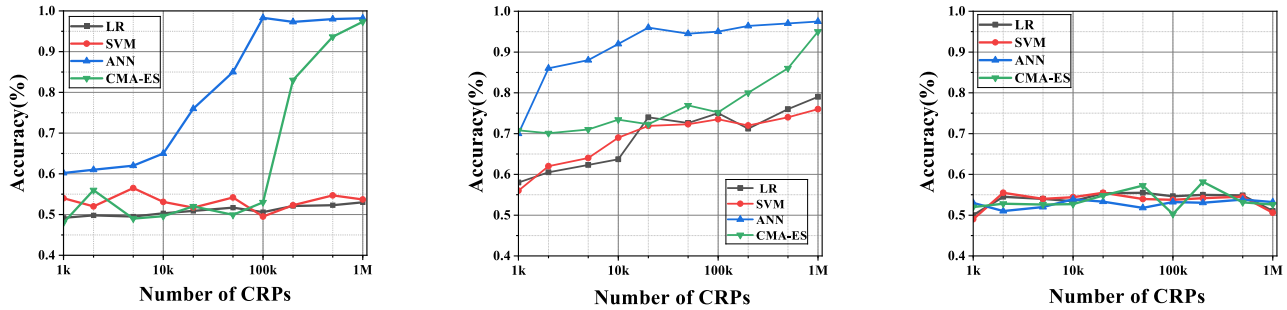

(a) (b) (c)

Fig. 10. Resistance of PUFs under four ML-based white-box attacks: (a) 4XOR APUF, (b) dual-mode PUF, and (c) CF PUF.

introducing kernel functions, SVM can map a nonlinearly separable problem to a higher dimensional space, transforming it into a linearly separable one. Fig. 9 illustrates that under a black-box attack, using 2k CRPs results in a 94% prediction accuracy for the APUF, but fails to establish a clear prediction trend for the dual-mode PUF and 4XOR APUF. In contrast, under the white-box attack model, the results align with those of LR: the dual-mode PUF achieves a prediction accuracy of approximately 76%, while the 4XOR PUF and CF PUF remain largely unpredictable, as shown in Fig. 10.

3) *Resistance of ANN:* ANN constructs nonlinear models using a multilayer neural network architecture and nonlinear activation functions, making them highly effective for black-box attacks. In this experiment, the ANN is implemented through a multilayer perceptron (MLP). The network structure consists of an input layer, multiple hidden layers, and an output layer. Each layer employs a nonlinear activation function (ReLU) for transformation, while the output layer utilizes the Softmax activation function to generate a probability distribution [35]. The results of the black-box attack are presented in Fig. 9. With just 500 CRP pairs, the prediction accuracy for the APUF reaches 95%. For the dual-mode PUF and 4XOR APUF, although the prediction accuracy improves as the number of CRPs increases, even with 1 million CRPs, the prediction accuracy remains around 60%. In the white-box attack model, when 100k CRPs are used, the prediction accuracy for the 4XOR APUF and dual-mode PUF exceeds 95%, demonstrating that white-box attacks can easily predict these PUFs. However, for the CF PUF, even with 1 million CRPs, the prediction accuracy remains only 55%, as shown in Fig. 10.

4) *Resistance of CMA-ES:* CMA-ES is an adaptive evolutionary algorithm considered one of the most effective attack methods against XOR APUF variants. In each iteration, the algorithm generates a set of candidate offspring based on the current parents' delay vector and random parameters, then evaluates the objective function values to select the optimal individuals, which are retained as parents for the next generation. However, under black-box attacks, the algorithm can only successfully predict single APUFs, as shown in Fig. 9. In white-box attacks, we model the target PUF as a mathematical function, treating the delay vector as the parameter vector and using the prediction error rate as the output. By continuously optimizing the delay vector, the algorithm minimizes the error rate. In our experiments, with up to 1 million CRPs, CMA-ES achieved a prediction accuracy of 98% for 4XOR APUFs and approximately 95% for dual-mode PUFs. However, for CF PUFs, despite a slight improvement, the prediction accuracy remained below the expected levels.

The black-box attack model above clearly shows that attack algorithms struggle to break structures with enhanced nonlinearity, such as 4XOR APUFs. However, once a white-box model is obtained through reverse engineering, applying the same algorithm with only a small number of CRPs can yield high prediction accuracy. This highlights the effectiveness of ANN and CMA-ES algorithms against nonlinear structures in

Authorized licensed use limited to: Zhengzhou University. Downloaded on January 31,2026 at 04:15:23 UTC from IEEE Xplore. Restrictions apply.

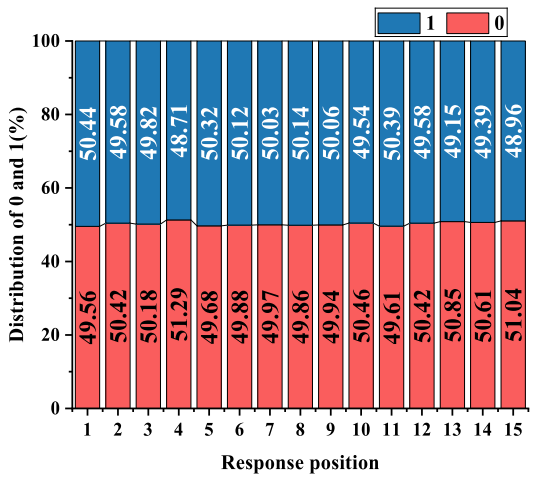

Fig. 11. Randomness of the proposed CF PUF.

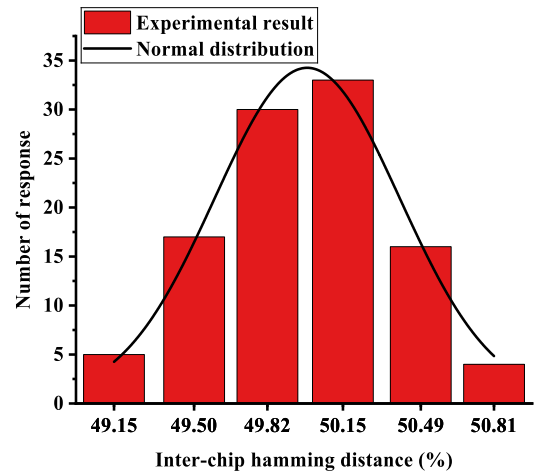

Fig. 12. Uniqueness of the proposed CF PUF.

white-box attacks. Despite this, for the proposed CF PUF, even when the attacker has access to the circuit structure, a white-box attack cannot effectively model or successfully attack the system using only the original CRP data.

VI. Experiment Results and Analysis

In this section, we analyze the CF PUF in terms of uniformity, uniqueness, and reliability. We also compare the key performance indicators of the CF PUF with those of well-known PUFs and the latest anti-attack PUFs, offering a comprehensive evaluation of its strengths and weaknesses.

A. Uniformity

Uniformity refers to the proportion of "0"s and "1"s in the total response of a PUF. It is a critical metric for evaluating whether the PUF exhibits sufficient randomness and unpredictability. The uniformity is assessed using the following equation: as illustrated in Fig. 11

$$\text{Uniformity} = \left(\frac{1}{n}\sum_{i=1}^{n} R_i\right) \times 100\% \tag{7}$$

where R_i is the ith bit in the n-bit response R. We collected 15 sets of samples, each comprising 10 000 CRPs, from 15 independent CF PUF circuits. The test results are shown in Fig. 11. After calculating the uniformity for each set and averaging the results, the overall uniformity was found to be 49.74%, exhibiting a small deviation from the ideal value of 50%. These results demonstrate that the CF PUF achieves good path symmetry in hardware implementations, ensuring the unpredictability of the output.

B. Uniqueness

Uniqueness is an important metric for PUFs used in security applications, e.g., device authentication and key generation, which characterizes the ability to distinguish the responses of different devices using the same challenges. We conducted a comprehensive uniqueness evaluation of the PUF using five different boards. On each board, three distinct locations were selected, and tests were performed at each location to ensure a thorough assessment of the PUF's performance

$$\text{Uniqueness} = \frac{2}{k(k-1)}\sum_{i=1}^{k-1}\sum_{j=i+1}^{k}\frac{\text{HD}\left(R_i, R_j\right)}{n} \times 100\% \tag{8}$$

where R_i and R_j are the responses from chip i and chip j respectively for k-chips. $\text{HD}(R_i, R_j)$ is the hamming distance between responses R_i and R_j. As illustrated in Fig. 12, the uniqueness of our proposed CF PUF is close to 50%, which meets our requirements effectively.

C. Reliability

Reliability is an important metric for evaluating the robustness of PUF to environmental changes, measured by calculating the repeatability of PUF responses to the same stimuli in different environments. Ideally, the reliability of a PUF would be 100%. This can be obtained by measuring the on-chip HD of the PUF. The definition of reliability is given by

$$\text{Reliability} = \left(1 - \frac{1}{m}\sum_{i=1}^{m}\frac{\text{HD}\left(R, R_i'\right)}{n}\right) \times 100\% \tag{9}$$

where R is the response generated n bits under normal operating conditions and R_i' is the response generated under the same challenge but different environmental conditions.

In this design, the final output may include responses from three different PUF types. As a result, instability in any one of these PUFs can lead to changes in response, thereby affecting the overall output stability, similar to the behavior observed in the 4XOR APUF. To enhance system reliability, we performed ten repeated tests on each of the three strong PUFs using a reliable CRP set filtered from the weak PUF at room temperature. From these tests, we select the stable CRPs for further analysis. To assess the reliability of the CF PUF, we use the responses measured at room temperature as a baseline. Next, we set the temperature in a controlled chamber to range from −20 °C to 80 °C, conducting tests at intervals of −20 °C. At each temperature point, we repeat the tests ten times.

Authorized licensed use limited to: Zhengzhou University. Downloaded on January 31,2026 at 04:15:23 UTC from IEEE Xplore. Restrictions apply.

TABLE I
PERFORMANCE COMPARISON WITH STATE-OF-THE-ART PUFS

	This Work	VLSI'25 [21]	VLSI'25 [37]	MICROELECTRON J'25 [38]	TIFS'24 [11]	IOTJ'22 [14]	IOTJ'24 [12]	TETC'22 [39]
Type	**CF PUF**	BF PUF	DEMUX-TDC PUF	CS-TERO PUF	(64, 4)-cSOI PUF	CT PUF	LFSR-APUF	DCH PUF
Technology	Artix-7	Virtex-7	Virtex-7	Virtex-7	Artix-7	Zynq	Artix-7	Artix-7
Stage	64	64	64	64	64	64	64	64
Uniformity	49.74%	47%	49.97%	49.25%	50.10%	49.8%	50%	-
Uniqueness	49.89%	49.99%	49.98%	53.65%	50%	49%	49.10%	49.34%
Reliability	98.02%	84.20%	99.71%	98.27%	97.30%	97.50%	99.30%	98.64%
Reconfigurability	Yes	No	Yes	No	No	Yes	No	No
Anti-Reverse Engineering Resistance	Yes	Yes	No	No	Yes	No	No	No
Types of PUFs[b]	Four	Two	One	One	Two	Three	One	One
Temperature Range	$-20 \sim 80°C$	$-10 \sim 80°C$	$0 \sim 80°C$	$27°C$	$-20 \sim 80°C$	$-50 \sim 125°C$	$-40 \sim 80°C$	$25°C$
Hardware Consumption	810 LUTs 450 FFs	405 LUTs 312 FFs	526 LUTs 55 FFs	1964GEs[c]	1035 LUTs 264 FFs	731 LUTs 486 FFs	383 LUTs 399 FFs	407 Slices[a]

[a] *Each slice contains 4 LUTs, 8 FFs and other logical resources.*
[b] *The number of PUF types available for response generation.*
[c] *GE, where a GE is equivalent to the area required by a two-input NAND.*
[–] *This suggests that the information on this indicator is not available in the literature.*

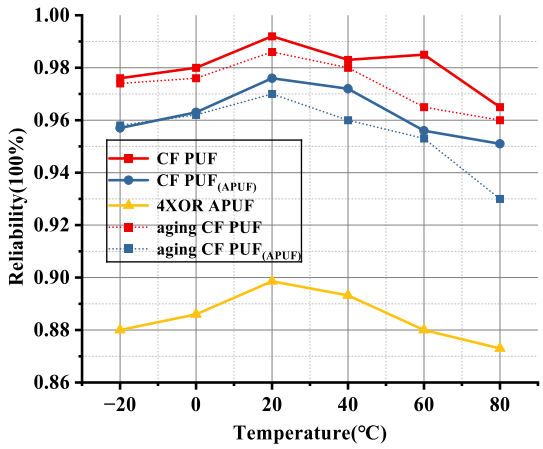

Fig. 13. Reliability with varying temperatures for CF PUF.

Finally, by comparing the results with those obtained at room temperature, we calculate the effect of temperature variation on the CF PUF's reliability and compute the average value, as illustrated in Fig. 13.

To further evaluate its reliability, accelerated aging tests were conducted to assess the aging tolerance of the CF PUF. Specifically, the FPGA board was placed in a high-temperature environment of 80 °C and operated continuously for 3 h to simulate the cumulative thermal stress encountered during long-term operation. Upon completion of the aging process, the device was removed from the thermal chamber and allowed to cool at room temperature for 1 h to ensure thermal stabilization. Subsequently, the PUF responses were measured again under the same temperature conditions as in the baseline tests, and the reliability was calculated according to (9). As shown in Fig. 13, the red dashed line represents the CF PUF operating in random mode: postaging performance variation is negligible, with reliability maintained at approximately 96% even at the highest test temperature. In the worst case scenario, where the strong PUF mode is entirely composed of APUF outputs (blue dashed line), a more noticeable degradation in reliability is observed only under high-temperature conditions. The observed performance stability under high-temperature aging stress affirms the CF PUF's suitability for reliable operation in harsh environments.

D. Comparison With Similar Prior Arts

Table I summarizes the performance of the proposed CF PUF, achieving near-ideal uniformity (49.7%), uniqueness (49.89%), and high reliability (98.02%). Prior attack-resistant designs, such as LFSR APUF [12], CT PUF [14], and DCH APUF [38], cannot inherently defend against reverse engineering. Recent designs, such as the DEMUX-TDC PUF [36] and CS-TERO [37], improve resistance to modeling attacks through nonlinear architectures. However, they remain susceptible to reverse engineering, where an adversary can reconstruct the challenge-response behavior by extracting structural or parametric details. In contrast, our proposed scheme embeds a weak PUF into a strong PUF link to enable reconfigurability among four distinct PUF types. This architecture not only enhances resilience against modeling attacks but also introduces a dynamic obfuscation mechanism that mitigates reverse engineering threats. In particular, it prevents the divide-and-conquer strategies that adversaries might employ to exploit the configurable PUF structure.

VII. CONCLUSION

In this article, we propose a CF PUF structure, which introduces, for the first time, the integration of both strong and weak PUF modes within the same circuit. To further enhance

Authorized licensed use limited to: Zhengzhou University. Downloaded on January 31,2026 at 04:15:23 UTC from IEEE Xplore. Restrictions apply.

the PUF's resistance to reverse engineering attacks, we introduce a dynamic obfuscation mechanism that utilizes responses generated in the weak PUF mode as control keys to adjust the operation sequence of the strong PUF, thereby improving system security. Even if an attacker successfully reverse engineers the circuit structure, they cannot model the PUF or understand the circuit's specific operational mechanism, as they are unable to access the key stream generated by the weak PUF. This effectively prevents reverse engineering attacks by making it impossible for attackers to model the PUF using CRPs corresponding to the respective PUF model. Finally, we implemented the proposed CF PUF on the FPGA Artix-7 platform, and experimental results demonstrate its strong performance. We also conducted white-box modeling attacks using four mainstream attack algorithms, with the experiments confirming that the CF PUF exhibits robust resistance to these attacks. Compared to existing reverse engineering resistance techniques, the proposed structure enables weak and classical strong PUFs to share basic structural units, resulting in minimal hardware overhead. This offers new possibilities for mitigating reverse engineering attacks when combined with previously proposed strong PUF designs.

REFERENCES

[1] B. Gassend, D. Clarke, M. van Dijk, and S. Devadas, "Silicon physical random functions," in *Proc. 9th ACM Conf. Comput. Commun. Secur.*, Nov. 2002, pp. 148–160.

[2] D. Lim, J. W. Lee, B. Gassend, G. E. Suh, M. Van Dijk, and S. Devadas, "Extracting secret keys from integrated circuits," *IEEE Trans. Very Large Scale Integr. (VLSI) Syst.*, vol. 13, no. 10, pp. 1200–1205, Oct. 2005.

[3] J. Guajardo, S. S. Kumar, G.-J. Schrijen, and P. Tuyls, "FPGA intrinsic PUFs and their use for IP protection," in *Proc. Int. Workshop Cryptograph. Hardw. Embedded Syst.*, 2007, pp. 63–80.

[4] Y. Su, J. Holleman, and B. P. Otis, "A digital 1.6 pJ/bit chip identification circuit using process variations," *IEEE J. Solid-State Circuits*, vol. 43, no. 1, pp. 69–77, Jan. 2008.

[5] E. S. Kumar, J. Guajardo, R. Maes, G.-J. Schrijen, and P. Tuyls, "Extended abstract: The butterfly PUF protecting IP on every FPGA," in *Proc. IEEE Int. Workshop Hardw.-Oriented Secur. Trust*, Jul. 2008, pp. 67–70.

[6] M. Gao, K. Lai, and G. Qu, "A highly flexible ring oscillator PUF," in *Proc. 51st ACM/EDAC/IEEE Design Autom. Conf. (DAC)*, Jun. 2014, pp. 1–6.

[7] Q. Chen, G. Csaba, P. Lugli, U. Schlichtmann, and U. Ruhrmair, "The bistable ring PUF: A new architecture for strong physical unclonable functions," in *Proc. IEEE Int. Symp. Hardw.-Oriented Secur. Trust*, San Diego, CA, USA, Jun. 2011, pp. 134–141.

[8] U. Rührmair, F. Sehnke, J. Sölter, G. Dror, S. Devadas, and J. Schmidhuber, "Modeling attacks on physical unclonable functions," in *Proc. 17th ACM Conf. Comput. Commun. Secur.*, New York, NY, USA, 2010, pp. 237–249.

[9] U. Rührmair et al., "PUF modeling attacks on simulated and silicon data," *IEEE Trans. Inf. Forensics Security*, vol. 8, no. 11, pp. 1876–1891, Nov. 2013.

[10] G. E. Suh and S. Devadas, "Physical unclonable functions for device authentication and secret key generation," in *Proc. 44th ACM IEEE Design Autom. Conf.*, Jun. 2007, pp. 9–14.

[11] C. Xu, L. Zhang, P.-I. Mak, R. P. Martins, and M.-K. Law, "Fully symmetrical obfuscated interconnection and weak-PUF-assisted challenge obfuscation strong PUFs against machine-learning modeling attacks," *IEEE Trans. Inf. Forensics Security*, vol. 19, pp. 3927–3942, 2024.

[12] Y. Wang et al., "A lightweight authentication protocol against modeling attacks based on a novel LFSR-APUF," *IEEE Internet Things J.*, vol. 11, no. 1, pp. 283–295, Jan. 2024.

[13] Q. Wang, M. Gao, and G. Qu, "A machine learning attack resistant dual-mode PUF," in *Proc. Great Lakes Symp. VLSI*, May 2018, pp. 177–182.

[14] J. Zhang, C. Shen, Z. Guo, Q. Wu, and W. Chang, "CT PUF: Configurable tristate PUF against machine learning attacks for IoT security," *IEEE Internet Things J.*, vol. 9, no. 16, pp. 14452–14462, Aug. 2022.

[15] D. P. Sahoo, S. Saha, D. Mukhopadhyay, R. S. Chakraborty, and H. Kapoor, "Composite PUF: A new design paradigm for physically unclonable functions on FPGA," in *Proc. IEEE Int. Symp. Hardw.-Oriented Secur. Trust (HOST)*, May 2014, pp. 50–55.

[16] J. Liu, Y. Zhao, Y. Zhu, C.-H. Chan, and R. P. Martins, "A weak PUF-assisted strong PUF with inherent immunity to modeling attacks and ultra-low BER," *IEEE Trans. Circuits Syst. I, Reg. Papers*, vol. 69, no. 12, pp. 4898–4907, Dec. 2022.

[17] Z. Chen, T. Sato, and H. Shinohara, "SpongePUF: A modeling attack resilient strong PUF with scalable challenge response pair," in *Proc. IEEE Int. Symp. Hardw. Oriented Secur. Trust (HOST)*, May 2024, pp. 244–253.

[18] R. Liu et al., "A featureless dual-mode latch-based PUF," *IEEE Trans. Very Large Scale Integr. (VLSI) Syst.*, vol. 33, no. 8, pp. 2312–2323, Aug. 2025.

[19] D. Yamamoto, M. Takenaka, K. Sakiyama, and N. Torii, "Security evaluation of bistable ring PUFs on FPGAs using differential and linear analysis," in *Proc. Federated Conf. Comput. Sci. Inf. Syst.*, Sep. 2014, pp. 911–918.

[20] S. Alahmadi, K. Khalil, H. Idriss, and M. Bayoumi, "Fortifying strong PUFs: A modeling attack-resilient approach using weak PUF for IoT device security," in *Proc. IEEE Int. Symp. Circuits Syst. (ISCAS)*, May 2024, pp. 1–5.

[21] Z. Huang et al., "BF PUF: A modeling attack-resistant strong PUF based on bent functions," *IEEE Trans. Very Large Scale Integr. (VLSI) Syst.*, vol. 33, no. 8, pp. 2299–2311, Aug. 2025.

[22] M. Thirumoorthi, M. Jovanovic, M. Mirhassani, and M. Khalid, "Design and evaluation of a hybrid chaotic-bistable ring PUF," *IEEE Trans. Very Large Scale Integr. (VLSI) Syst.*, vol. 29, no. 11, pp. 1912–1921, Nov. 2021.

[23] G. T. Becker, "The gap between promise and reality: On the insecurity of XOR arbiter PUFs," in *Proc. 17th Int. Workshop Cryptograph. Hardw. Embedded Syst. (CHES)*, Saint-Malo, France. Cham, Switzerland: Springer, 2015, pp. 535–555.

[24] N. Wisiol, B. Thapaliya, K. T. Mursi, J.-P. Seifert, and Y. Zhuang, "Neural network modeling attacks on arbiter-PUF-based designs," *IEEE Trans. Inf. Forensics Security*, vol. 17, pp. 2719–2731, 2022.

[25] D. P. Sahoo, D. Mukhopadhyay, R. S. Chakraborty, and P. H. Nguyen, "A multiplexer-based arbiter PUF composition with enhanced reliability and security," *IEEE Trans. Comput.*, vol. 67, no. 3, pp. 403–417, Mar. 2018.

[26] L. Wu, Y. Hu, K. Zhang, W. Li, X. Xu, and W. Chang, "FLAM-PUF: A response–feedback-based lightweight anti-machine-learning-attack PUF," *IEEE Trans. Comput.-Aided Design Integr. Circuits Syst.*, vol. 41, no. 11, pp. 4433–4444, Nov. 2022.

[27] Y. Chen, X. Cui, Y. Liu, and X. Cui, "An evaluation method of the anti-modeling-attack capability of PUFs," *IEEE Trans. Inf. Forensics Security*, vol. 18, pp. 1773–1788, 2023.

[28] D. Lagunovsky, S. Ablameyko, and M. Kutas, "Recognition of integrated circuit images in reverse engineering," in *Proc. 14th Int. Conf. Pattern Recognit.*, vol. 2, Aug. 1998, pp. 1640–1642.

[29] R. Quijada, A. Raventós, F. Tarrés, R. Durà, and S. Hidalgo, "The use of digital image processing for IC reverse engineering," in *Proc. IEEE 11th Int. Multi-Conf. Syst., Signals Devices (SSD14)*, Feb. 2014, pp. 1–4.

[30] Z. Chen et al., "A lightweight and machine-learning-resistant PUF using obfuscation-feedback-shift-register," *IEEE Trans. Circuits Syst. II, Exp. Briefs*, vol. 69, no. 11, pp. 4543–4547, Nov. 2022.

[31] Q. Ma, C. Gu, N. Hanley, C. Wang, W. Liu, and M. O'Neill, "A machine learning attack resistant multi-PUF design on FPGA," in *Proc. 23rd Asia South Pacific Design Automat. Conf. (ASP-DAC)*, Jan. 2018, pp. 97–104.

[32] R. Della Sala, D. Bellizia, and G. Scotti, "A lightweight FPGA compatible weak-PUF primitive based on XOR gates," *IEEE Trans. Circuits Syst. II, Exp. Briefs*, vol. 69, no. 6, pp. 2972–2976, Jun. 2022.

[33] M. Majzoobi, F. Koushanfar, and S. Devadas, "FPGA PUF using programmable delay lines," in *Proc. IEEE Int. Workshop Inf. Forensics Secur.*, Dec. 2010, pp. 1–6.

[34] D. P. Sahoo, R. S. Chakraborty, and D. Mukhopadhyay, "Towards ideal arbiter PUF design on Xilinx FPGA: A practitioner's perspective," in *Proc. Euromicro Conf. Digit. Syst. Design*, Aug. 2015, pp. 559–562.

[35] C. Xu, L. Zhang, M.-K. Law, X. Zhao, P.-I. Mak, and R. P. Martins, "Modeling-attack-resistant strong PUF exploiting stagewise obfuscated interconnections with improved reliability," *IEEE Internet Things J.*, vol. 10, no. 18, pp. 16300–16315, Sep. 2023.

[36] T. Ni et al., "A response-nonlinearized DEMUX-TDC PUF for resistance against modeling attacks and secure authentication protocols," *IEEE Trans. Very Large Scale Integr. (VLSI) Syst.*, vol. 33, no. 10, pp. 2606–2619, Oct. 2025.

Authorized licensed use limited to: Zhengzhou University. Downloaded on January 31,2026 at 04:15:23 UTC from IEEE Xplore. Restrictions apply.

[37] J. Bian, X. Du, Y. Lu, A. Yan, H. Liang, and Z. Huang, "A chaotic strong transition effect ring oscillator PUF with effective immunity to modeling attacks," *Microelectron. J.*, vol. 157, Mar. 2025, Art. no. 106592.

[38] Y. Wang, C. Wang, C. Gu, Y. Cui, M. O'Neill, and W. Liu, "A dynamically configurable PUF and dynamic matching authentication protocol," *IEEE Trans. Emerg. Topics Comput.*, vol. 10, no. 2, pp. 1091–1104, Apr. 2022.

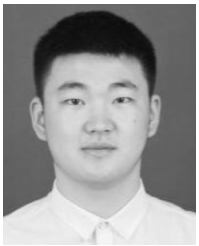

Guangyang Zhang was born in Henan, China, in 1999. He received the Bachelor of Science degree from Binhai College, Nankai University, Tianjin, China, in 2021. He is currently pursuing the M.S. degree with Zhengzhou University, Zhengzhou, China.

His current research interests include hardware security and digital integrated circuits.

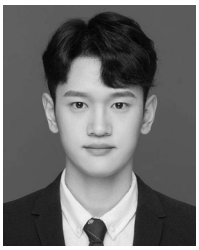

Houran Ji was born in Henan, China, in 2001. He received the B.S. degree in electronic information engineering from Zhengzhou University, Zhengzhou, China, in 2023, where he is currently pursuing the M.S. degree in electronic science and technology.

His current research interests include hardware security and digital integrated circuits.

Wenbing Fan received the Ph.D. degree from East China University of Science and Technology, Shanghai, China, in 2003.

He is currently a Professor with the School of Information Engineering, Zhengzhou University, Zhengzhou, China. His current research interests include mixed-signal circuits and embedded systems.

Yao Wang (Member, IEEE) received the M.S. degree from Zhengzhou University, Zhengzhou, China, in 2009, and the Ph.D. degree from the University of Electronic Science and Technology of China (UESTC), Chengdu, China, in 2013.

From 2014 to 2017, he was a Lecturer with UESTC, and then, he joined Zhengzhou University. Since 2018, he has been an Associate Professor with the School of Information Engineering, Zhengzhou University. His research interests include low-power mixed-signal integrated circuits and hardware security for IoT applications.

Authorized licensed use limited to: Zhengzhou University. Downloaded on January 31,2026 at 04:15:23 UTC from IEEE Xplore. Restrictions apply.