A Wideband Differential Linear Low-Noise Transconductance Amplifier With Active-Combiner Feedback in Complementary MGTR Configurations

Benqing Guo, *Member, IEEE*, Jing Gong, and Yao Wang, *Member, IEEE*

***Abstract*— A wideband differential linear low-noise transconductance amplifier (LNTA) is proposed for SAW-less applications. An active combiner provides a dual-loop feedback for wideband matching with power efficiency. Operating as an auxiliary common source (CS) stage, complementary multi-gated transistor (MGTR) configurations are employed to compensate for the second- and third-order nonlinearity of the main CS stage, improving small-signal linearity. Large-signal linearity is also enhanced due to Class AB configurations. Additionally, the push-pull operation of the main CS stage and the auxiliary CS stage preserves good large-signal input matching performance. Implemented in a 0.18-μm CMOS process, the measured LNTA chip provides a minimum noise figure (NF) of 2.5 dB, and a maximum transconductance value of 76.7 mS from 0.1 to 3.1 GHz. On average, an input 1-dB compression point ($IP_{1\,dB}$) of 2.3 dBm and an input third-order intercept point (IIP3) of 17.8 dBm are obtained, respectively. The blocker NF is 4.0 dB under a 0 dBm blocker injection while the $S_{11} < -10$ dB is maintained even with the blocker input of −3.1 dBm. The LNTA core only draws 13.3 mA from a 1.8 V supply.**

***Index Terms*— Wideband, low-noise transconductance amplifier (LNTA), linearity, noise, active-combiner feedback, multi-gated transistor (MGTR), complementary configurations.**

I. Introduction

MOTIVATED by tremendous commercial demands for innovative mobile communication systems featured with a high data rate, a lot of dedication have been contributed to the development and research of wideband RF front-ends with emphasis at low-power and low-cost traits, since the last decade [1]. Especially among them, a surface acoustic wave (SAW)-less receiver has become a competitive architecture for fully integrated multimode/multiband receiver solutions. Serving SAW-less applications, a current-mode receiver (CM-RX) architecture is demonstrated in Fig. 1. It typically includes a low-noise transconductance amplifier (LNTA), passive mixers, and transimpedance amplifiers (TIAs). Note that the very first building block comes from the LNTA, in which linearity and blocker tolerance are additional important concerns besides typical design considerations of bandwidth, transconductance gain and noise performance [2], [3].

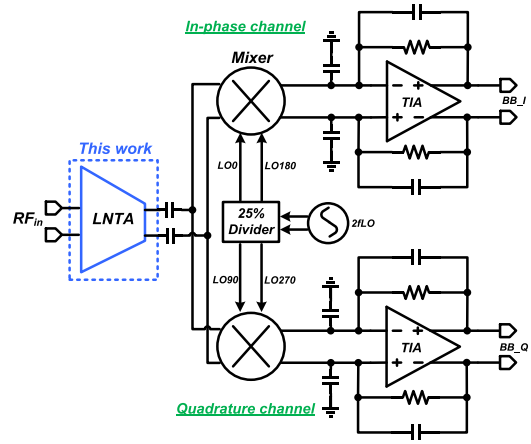

Fig. 1. Typical current-mode SAW-less RX architecture.

In retrospect, the current reports about LNTAs usually are derived from the related low-noise amplifier (LNA) structures. Notice that, derived from the common-gate (CG) LNA structure, a large-swing LNTA presented in [4] and based on a push-pull operation has achieved a high input desensitization point. However, the fixed 50 Ω input matching constraint leads to a small transconductance and insufficient noise inhibition for the following passive mixers and TIAs, at last degrading the overall noise performance of the receiver in practice. Given additional transconductance provided by a common-source (CS) stage in the classical CG-CS LNA structures (so-called

Manuscript received May 19, 2020; revised August 27, 2020; accepted September 22, 2020. Date of publication October 16, 2020; date of current version December 21, 2020. This work was supported in part by the National Natural Science Foundation of China under Grant 61871073 and Grant 61704022. This article was recommended by Associate Editor M. Onabajo. *(Corresponding author: Benqing Guo.)*

Benqing Guo is with the College of Communication Engineering, Chengdu University of Information Technology, Chengdu 610225, China (e-mail: rficgbq@gmail.com, gbq@cuit.edu.cn).

Jing Gong is with the West China Hospital, Sichuan University, Chengdu 610041, China.

Yao Wang is with the School of Information Engineering, Zhengzhou University, Zhengzhou 450001, China.

Color versions of one or more of the figures in this article are available online at https://ieeexplore.ieee.org.

Digital Object Identifier 10.1109/TCSI.2020.3029298

1549-8328 © 2020 IEEE. Personal use is permitted, but republication/redistribution requires IEEE permission.
See https://www.ieee.org/publications/rights/index.html for more information.

Authorized licensed use limited to: Zhengzhou University. Downloaded on February 18,2021 at 08:34:01 UTC from IEEE Xplore. Restrictions apply.

noise-cancelling LNAs) [5]–[8], a push-pull wideband CG-CS LNTA scheme is proposed, alternatively [9]. It, therefore, has achieved an enhanced transconductance value and good linearity as well, thanks to an embedded N-path filter. Nevertheless, the noise figure (NF) of as high as 6.5 dB mainly ascribed to the noisy N-path filter, makes the structure unattractive, and the single-ended structure by itself is also not desirable for a system-on-chip (SOC) integration due to the poor common-mode interference suppression. In addition, based on the noise-cancellation principle, another CG-CS LNTA variant has also been reported with high linearity and low noise across a wide bandwidth [10]. Unfortunately, there are two stacked nMOS and pMOS transistors and four load resistors connected in series from supply to ground. Thus, a larger supply voltage is unavoidable to maintain certain output headroom and linearity, which nevertheless is not consistent with the supply scaling-down trend in modern CMOS process technology. What is more, note that both [4] and [9] have used bulky on-chip inductors with the increased cost and die area. On the other hand, without the concern of noise-cancelling robustness in the CG-CS LNA, and undesirable correlation of gain and input matching in the resistive feedback LNA, the active-feedback LNA is easy to balance gain, noise, and input matching. Likewise, an active-feedback LNTA potentially also can inherit the advantages from the corresponding LNA counterpart. Based on these observations, it, thus, is of value to develop a linearity-competitive LNTA generally derived from the active-feedback structure, to meet stringent requirements from the SAW-less receivers.

Operating as wideband LNTAs, an ideal structure should have the normal execution of input matching, low noise, and high linearity, simultaneously. To better drive the low resistance resulted from the following mixers and the baseband TIAs, the structure should also deliver an output resistance as high as possible, where any external resistors should be avoided if possible. Importantly, reduced numbers of stacked components between supply and ground are generally welcome in order to accommodate a low supply. In this article, the structural innovation has been done to evolute the conventional active-feedback LNA [11], [12] into a corresponding LNTA topology. Only two stacked components in the presented structure can spare large load headroom under a standard supply voltage. At the output side, large drain-source resistance (r_o) of the two stacked transistors roughly denotes the output resistance of the presented LNTA, enabling a good load-driving capability. By exploiting an active-combiner feedback and complementary multi-gated transistor (MGTR) configurations, a compact wideband LNTA is developed, ultimately. It achieves high linearity with compensations for the second- and third-order nonlinearity of devices, simultaneously. The theory and method are validated by the simulated and experimental results.

The rest of the paper is organized as follows. Section II introduces the proposed LNTA structure, the related design trade-offs, and the circuit implementation. Section III discusses the simulation and measurement results, and conclusions are drawn in Section IV.

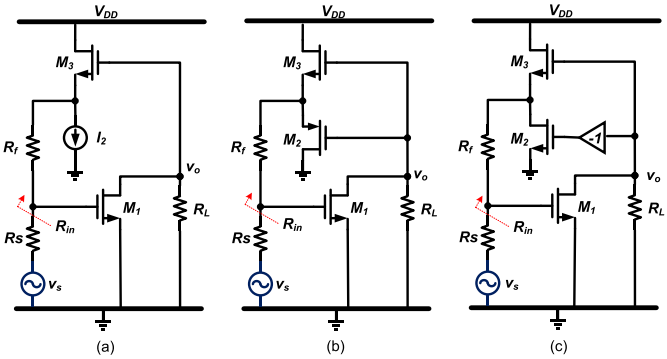

$$R_{in} = \frac{\frac{1}{g_{m3}} + R_f}{1 + g_{m1} R_L} \qquad R_{in} = \frac{\frac{1}{2g_{m3}} + R_f}{1 + g_{m1} R_L}\Big|_{g_{m2}=g_{m3}} \qquad R_{in} = \frac{\frac{1}{g_{m3}} + R_f}{1 + 2g_{m1} R_L}\Big|_{g_{m2}=g_{m3}}$$

Fig. 2. Several provisional active-feedback LNTA diagrams: (a) single source-follower feedback topology, (b) complementary source-follower feedback topology, and (c) active-combiner feedback topology.

II. Proposed Active-Combiner Feedback LNTA

A. Differential LNTA Structure

Fig. 2 depicts several provisional active-feedback topologies possible for the LNTA implementations, where a single source-follower (SF) feedback topology (Fig.2(a)) was reported in [11] and a complementary SF feedback topology (Fig.2(b)) appeared in [25]. Instead of bulky and costly passive combiners (no matter transformer-based or microstrip-line-based it is in the specific physical implementation), commonly used in the ó-õmonolithic microwave integrated circuits (MMICs), an active combiner in Fig.2 (c) will have a reasonably compact size and perform a similar conversion function from differential inputs to a single-ended output, too. Quantitatively, the input resistance comparisons of these potential active-feedback LNTAs are performed with the typical parameters of $R_f = 300\ \Omega$, $R_L = 40\ \Omega$, and $g_{m3} = 6$ mS. Note that to accomplish the same goal resistance of 50 Ω, the required transconductance g_{m1} for the single source-follower (SF) feedback topology (Fig.2(a)), complementary SF feedback topology (Fig.2(b)), and active-combiner feedback topology (Fig.2(c)) takes 208.3, 167, and 104.6 mS, respectively. Undoubtedly, the active-combiner feedback topology is the most power-efficient choice among them. Besides this benefit, the active combiner with two identical nMOS transistors in Fig.2(c) could share a single P-well and guard ring in the layout implementation. It is beneficial for reduced parasitics and distortions by the layout mismatch compared to the complementary SF feedback topology typically surrounded by the opposite types of guard rings.

To provide a common-mode rejection widespread in the SOC solutions, a differential LNTA structure is desirable. Specifically, shown in Fig. 3 is the schematic of the proposed differential LNTA derived from the active-combiner feedback topology in Fig.2(c). A complementary main CS stage (M_{n1} and M_{p1}) is adopted to double the current efficiency. Furthermore, the push-pull operation of the complementary main CS stage also increases the large-signal linearity [4].

Authorized licensed use limited to: Zhengzhou University. Downloaded on February 18,2021 at 08:34:01 UTC from IEEE Xplore. Restrictions apply.

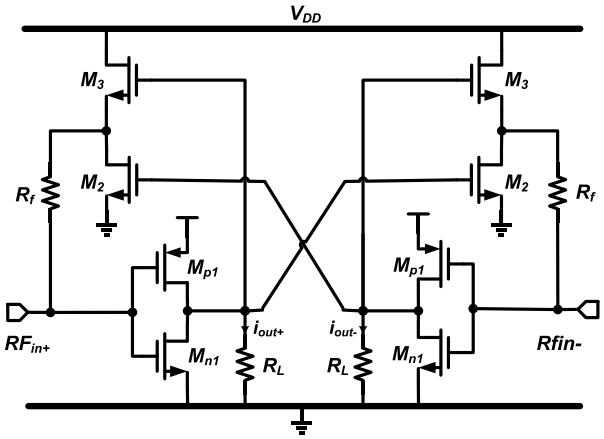

Fig. 3. Diagram of the proposed wideband differential LNTA with active-combiner feedback (bias not shown).

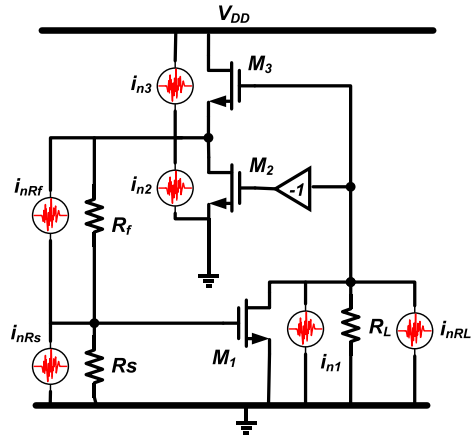

Fig. 4. Single-ended equivalent noise analysis model for differential structure in Fig. 3, including individual noise sources by different parts. M_1 denotes the combined transistor of M_{n1} and M_{p1}.

The cross-coupled active combiner (M_2 and M_3) in principle delivers a dual-loop feedback to realize wideband matching. With proper bias optimization, it also alleviates the second-order interaction problem due to the active nonlinear feedback [11]. The load resistor, R_L models the resistance translated by the following current–commutating passive mixers and baseband TIAs.

B. Input Impedance Matching and Effective Transconductance

At low frequencies, the single-ended input resistance of the presented differential circuit prototype as in Fig. 3, R_{in} is expressed as

$$R_{in} = \frac{1 + g_{m3} R_f}{g_{m3} + (g_{m2} + g_{m3})\, g_{m1} R_L} = \frac{\frac{1}{g_{m3}} + R_f}{1 + 2 g_{m1} R_L} \tag{1}$$

where g_{m1} is the combined transconductance of the CS transistors (M_{n1} and M_{p1}) while g_{m2} and g_{m3} are the transconductance of the active-combiner transistors (M_2 and M_3), respectively. In the case of $g_{m2} = g_{m3}$, the two times loop gain factor appears at the denominator of (1), alleviating the power dissipation in the main CS stage. At high frequencies, a π-type matching network is exploited to expand matching bandwidth and can be displayed in Fig.15. It comprises of the parasitic input capacitance C_{in} (including parasitic capacitances of the LNTA and pad), the bondwire inductance L_{bw}, the off-chip inductor L_1, and the off-chip capacitance C_1.

Then the input resistance Z_{in} is written as (2), shown at the bottom of the page, where parasitic bondwire resistance, R_{bw} is neglected for simplicity. And the input reflection coefficient S_{11} is shown as

$$S_{11} = \frac{Z_{in} - R_s}{Z_{in} + R_s} \tag{3}$$

where parameter R_s denotes the 50 Ω source resistance. To effectively avoid a signal reflection at the input port, a matching level of $20\log_{10}|S_{11}| < -10$dB often is required. The input resistance R_{in} is further expressed as a function of S_{11} and written as (4), shown at the bottom of the page.

Moreover, with consideration of the input matching network, the effective transconductance, G_m of the LNTA is given by

$$G_m \cong \frac{g_{m1}}{\sqrt{\left(1 - \omega^2 (L_1 + L_{bw}) C_{in}\right)^2 + \left(\omega (L_1 + L_{bw}) / R_{in}\right)^2}} \tag{5}$$

which is peaked roughly around the pole created by $L_1 + L_{bw}$ and C_{in} of the π-type matching network.

C. Noise Analysis and Trade-Offs

For simplicity, the induced gate noise of transistors is ignored while the parasitic resistance of the π-type matching network is not considered. Based on the linear superposition principle of the individual noise sources in Fig. 4, the noise factor, F, due to the thermal noise of the CS transistors, active-combiner transistors, and resistors of R_f and R_L is derived as

$$F = 1 + EF_{M1} + EF_{M2} + EF_{M3} + EF_{Rf} + EF_{RL} \tag{6}$$

$$EF_{M1} = \frac{4\gamma}{\alpha} \frac{\left[1 + g_{m3}\left(R_S + R_f\right)\right]^2}{g_{m1} R_S \left[1 + g_{m3}\left(R_S + R_f\right) + g_{m1} R_S R_L (g_{m2} + g_{m3})\right]^2} \cong \frac{\gamma}{\alpha} \frac{1}{g_{m1} R_S} \tag{7}$$

$$Z_{in} \cong \frac{R_{in}\left[1 - \omega^2 (L_1 + L_{bw}) C_{in}\right] + j\omega (L_1 + L_{bw})}{1 - \omega^2 (L_1 + L_{bw}) C_1 + j\omega R_{in} (C_1 + C_{in}) - j\omega^3 R_{in} (L_1 + L_{bw}) C_1 C_{in}} \tag{2}$$

$$R_{in} = \frac{j\omega (L_1 + L_{bw})(1 - S_{11}) - \left[1 - \omega^2 (L_1 + L_{bw}) C_1\right] R_s (1 + S_{11})}{j\omega \left[C_1 + C_{in} - \omega^2 (L_1 + L_{bw}) C_1 C_{in}\right] R_s (1 + S_{11}) - \left[1 - \omega^2 (L_1 + L_{bw}) C_{in}\right](1 - S_{11})} \tag{4}$$

Authorized licensed use limited to: Zhengzhou University. Downloaded on February 18,2021 at 08:34:01 UTC from IEEE Xplore. Restrictions apply.

$$EF_{M2} = \frac{4\gamma}{\alpha}\frac{g_{m2}R_S}{\left[1+g_{m3}\left(R_S+R_f\right)+g_{m1}R_SR_L(g_{m2}+g_{m3})\right]^2} \cong \frac{\gamma}{4\alpha}\frac{1}{g_{m2}R_S\left(g_{m1}R_L\right)^2} \quad (8)$$

$$EF_{M3} = \frac{4\gamma}{\alpha}\frac{g_{m3}R_S}{\left[1+g_{m3}\left(R_S+R_f\right)+g_{m1}R_SR_L(g_{m2}+g_{m3})\right]^2} \cong \frac{\gamma}{4\alpha}\frac{1}{g_{m3}R_S\left(g_{m1}R_L\right)^2} \quad (9)$$

$$EF_{Rf} = \frac{4g_{m3}^2R_SR_f}{\left[1+g_{m3}\left(R_S+R_f\right)+g_{m1}R_SR_L(g_{m2}+g_{m3})\right]^2} \cong \frac{R_S}{R_f} \quad (10)$$

$$EF_{RL} = \frac{4\left[1+g_{m3}\left(R_S+R_F\right)\right]^2}{g_{m1}^2R_SR_L\left[1+g_{m3}\left(R_S+R_F\right)+g_{m1}R_SR_L(g_{m2}+g_{m3})\right]^2} \cong \frac{1}{g_{m1}^2R_SR_L} \quad (11)$$

where g_{m1} again denotes the combined transconductance of the CS transistors (M_{n1} and M_{p1}) and parameters, γ and α are the bias-dependent noise coefficients [14]. The excess noise factors EF_{M1}, EF_{M2}, EF_{M3}, EF_{RF}, and EF_{RL} are the corresponding thermal noise contribution from transistors $M_1 \sim M_3$, and resistors of R_f and R_L, respectively. Besides a partial noise-cancelling benefit [15] via the active-combiner feedback loop, note that to design a large g_{m1} is generally beneficial for a small F as disclosed in the noise factor equation. Noise and input resistance trade-off relationship of proposed active-combiner feedback LNTA are further displayed quantitatively, with respect to the parameter variations of g_{m1} and R_f in Fig.5 and Fig.6. The parameter set of $\gamma/\alpha = 0.9$, $g_{m2} = g_{m3} = 5.6$ mS, and $R_L = 40\ \Omega$, is adopted correspondingly. Note that to obtain ~2.5 dB NF and even below, the R_f value should be at least larger than 250 Ω when taking a smaller g_{m1} around 72 mS for lower power constraints. And with further increasing R_f, the noise figure exhibits no prominent variations. In contrast, with the same g_{m1} increasing the R_f from 169 to 303 Ω renders the R_{in} variation between 50 and 70 Ω, monotonically. On the other hand, a slightly higher input resistance will effectively improve the input matching level at the high-frequency side in combination with the π-type matching network [13]. Herein, a trade-off between the NF and input matching yields an optimized R_{in} around 70 Ω that is slightly higher than the conventional 50 Ω and can be referred to Part F.

Meanwhile, another trade-off between power consumption and noise is depicted in Fig.7. Specifically, the transistor M_1 as the predominant power consumption component is of primary concern and examined here. And the overdrive voltage of M_1, V_{ov1} assumes ~200 mV while a simple square-law equation is used for simplified dc current estimation. Again, to obtain ~2.5 dB NF necessitates the condition of $g_{m1} \geq 72$ mS.

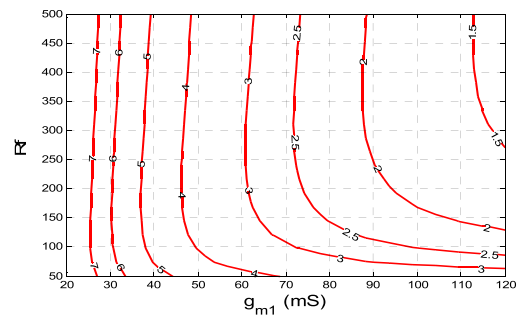

Fig. 5. Calculated noise figure, NF contour of proposed LNTA with active-combiner feedback versus parameter variations of g_{m1} and R_f. Parameter set of $\gamma/\alpha = 0.9$, $g_{m2} = g_{m3} = 5.6$ mS, and $R_L = 40\ \Omega$ is adopted, correspondingly.

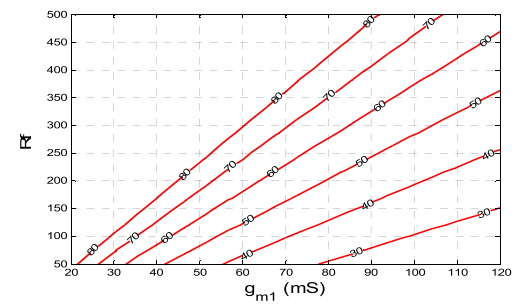

Fig. 6. Calculated input resistance, R_{in} contour of proposed LNTA with active-combiner feedback with respect to parameter variations of g_{m1} and R_f, where parameter set is the same as above.

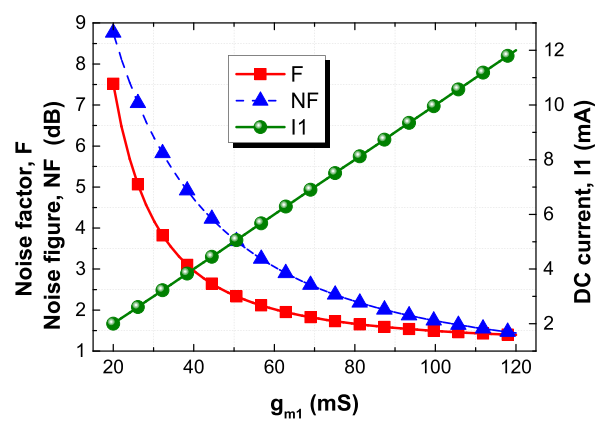

Fig. 7. Estimated parameters of the noise factor F, noise figure NF, and absorbed dc current by transistor M_1, I_1 with respect to transconductance g_{m1}.

Herein it means that the dc current of $I_1 = 7$ mA has to be burned by M_1. Thanks to the complementary configuration of M_{n1} and M_{p1} in the CS stage, the transconductance value required for low noise can be maintained but with a nearly half-burned current. The trade-off of power consumption and noise for the proposed active-combiner feedback LNTA is thus alleviated. Moreover, Fig.8 presents the noise percentage distribution by individual noise contributors from different parts in the active-combiner feedback LNTA, which is simulated at 1 GHz by the Spectre RF simulator. Besides the main noise contributor by the input port, the input CS stage plays the second role in noise percentage contribution followed by the active combiner, feedback resistor, and load resistor, sequentially.

Authorized licensed use limited to: Zhengzhou University. Downloaded on February 18,2021 at 08:34:01 UTC from IEEE Xplore. Restrictions apply.

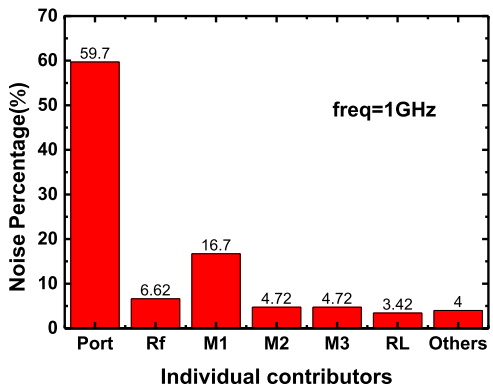

Fig. 8. Noise percentage distribution by individual noise contributors from different parts in proposed differential active-combiner feedback LNTA.

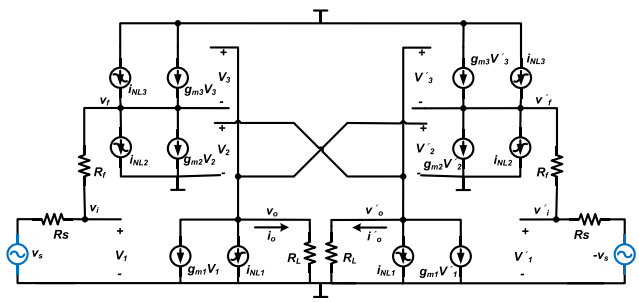

Fig. 9. Small-signal equivalent model of linearity analysis for Fig. 15(a). where g_{m1} denotes the combined transconductance of the main and auxiliary CS transistors (M_{n1}, M_{p1}, M_{an1}, and M_{ap1}).

D. Small-Signal Linearity

By utilizing an MGTR technique, the proposed circuit is expected to render high small-signal linearity only with slightly increased power consumption. The differential structure in Fig.3 is replaced by the diagram in Fig. 15(a) with an auxiliary complementary CS stage (M_{an1} and M_{ap1}) being added. Fig. 9 gives the small-signal equivalent model for linearity analysis in Fig. 15(a), where g_{m1} ultimately denotes the combined transconductance of the main and auxiliary CS transistors (M_{n1}, M_{p1}, M_{an1}, and M_{ap1}). For simplicity, the memory effect by parasitic capacitances is neglected, and the Taylor series considering up to the third-order nonlinearity are applied at each node. By performing derivations as in the Appendix, the third-order input intercept point (IIP3) [16] for the circuit can be expressed as:

$$A_{IIP3} = \sqrt{\frac{4}{3}\left|\frac{g_{m1}a_1}{g_{m1}a_3 + g'_{m1}a_1a_2 + \frac{1}{6}g''_{m1}a_1^3}\right|}. \tag{12}$$

where parameters $a_1 \sim a_3$ are defined in the Appendix. Additionally, for the composite transistor M_1 composed of M_{n1}, M_{p1}, M_{an1}, and M_{ap1} we also have

$$\begin{cases} g_{mi} = g_{mni} + g_{mpi} + g_{mani} + g_{mapi} \\ g'_{mi} = g'_{mni} - g'_{mpi} + g'_{mani} - g'_{mapi} \\ g''_{mi} = g''_{mni} + g''_{mpi} + g''_{mani} + g''_{mapi}. \end{cases} \tag{13}$$

Parameters g_{mi}, g'_{mi}, and g''_{mi} (i takes unity) are the combined transconductance of M_{n1} and M_{p1}, first-order and second-order derivative of that, respectively. Improved small-signal linearity of IIP3 can be accomplished only if the denominator item in (12) is minimized. The differential structure of the LNA justifies that second-order distortion is cancelled under ideal symmetry. But the denominator of (12) (namely, (A12) in the Appendix) presents a more complicated nonlinearity characteristic. It is disclosed that there are third-order nonlinearity items related to $g''_{m1\sim3}$ and second-order interaction items between $g'_{m1\sim3}$ and $g'_{m1\sim3}$, both of which are responsible for the small-signal linearity performance.

The MGTR technique was validated in effectively cancelling the third-order distortion coefficient of transistors to improve IIP3 [17]. Based on it, the auxiliary CS transistors M_{an1} and M_{ap1} in weak inversion region with negligible power consumption is introduced to compensate for the second- and third-order distortion coefficients of the main CS transistors M_{n1} and M_{p1}, improving the IIP3. In more detail, due to the complementary transistor characteristics in both the main CS stage and the auxiliary CS stage, the combined $g'_{mn1} - g'_{mp1}$ has the opposite polarity and comparable amplitude with the combined $g'_{man1} - g'_{map1}$. It approximately nullifies the equivalent second-order nonlinear coefficient of the composite CS transistors, g'_{m1} in (A12), and thus realizes the second-order nonlinearity of the combined CS stages negligible [18], [19]. Moreover, the identical design parameters and layout of M_2 and M_3 also nullify the distortion items with a common coefficient (g_{m2}-g_{m3}). Fig.10 (b) just shows the transconductance derivative curves of the main CS stage and the auxiliary CS stage, and desirable second-order distortion reduction. Furthermore, the adopted complementary MGTR configurations also minimize the equivalent third-order nonlinear coefficient of the combined CS transistors, g''_{m1} around the linearized window near to the optimized bias of $V_{gs,Mn1} = 0.7$ V as depicted in Fig. 10 (c).

Thus in (A12), the second and last items related to$g''_{m3}(g_1a_1R_L + f_1)^3 + g''_{m2}(g_1a_1R_L)^3$ and $g'_{m3}(g_{m1}a_1R_L + f_1)^2 - g'_{m2}(g_{m1}a_1R_L)^2$, now are only left. In principle, they could be cancelled, simultaneously provided that the below relationship is met

$$f_1 = -2g_{m1}a_1R_L. \tag{14}$$

However, it, in turn, leads to $R_s = R_f/(1+2g_{m1}R_L)$, conflicting with the input matching relationship in (1). The strategy here is that the active-combiner transistors of M_2 and M_3 are intensively biased at large overdrive voltage (~400 mV), nearly leading to negligible $g'_{m2\sim3}$ and $g''_{m2\sim3}$. Consequently, the total output third-order distortion current can be minimized and high small-signal linearity of IIP3 is expected at least at low frequencies with the above-mentioned strategy applied. At high frequencies, memory components typically as unwanted parasitic capacitances will construct IP3 limitations through the so-called second-order interaction mechanism [20], [21]. Fortunately, the second-order interaction via the product of the combined distortion coefficient, g'_{mi} and frequency-dependent functions related to the parasitics could be weakened thanks to the compensated g'_{mi} in complementary configurations, alleviating the linearity deterioration at high frequencies.

Authorized licensed use limited to: Zhengzhou University. Downloaded on February 18,2021 at 08:34:01 UTC from IEEE Xplore. Restrictions apply.

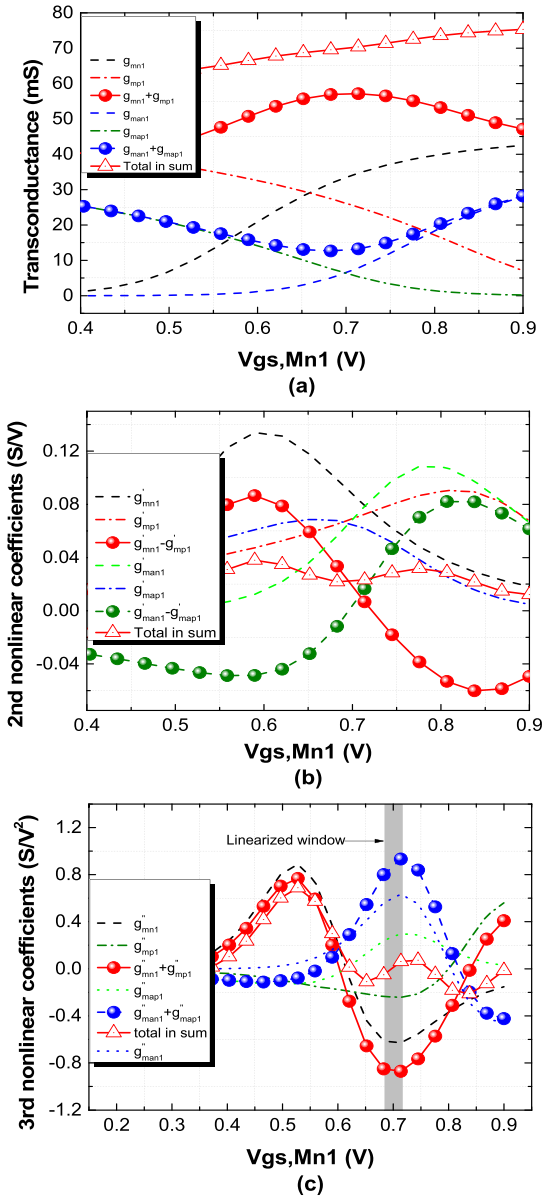

Fig. 10. (a) Transconductance, (b) first-order, and (c) second-order derivatives of transconductance of the main CS stage and auxiliary CS stage both in complementary configurations.

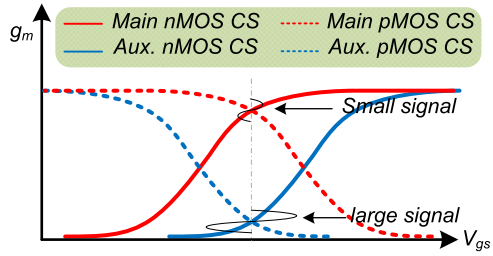

Fig. 11. Diagram of transconductance curves of the main CS stage and auxiliary CS stage both in complementary configurations.

E. Large-Signal Linearity and Input Impedance Matching

By performing the wanted signal amplification, the input CS stages mainly determine the large-signal linearity performance of the LNTA. Fig.11 displays the transconductance curves versus the gate-source bias V_{gs} of the two CS stage transistors. Since the auxiliary CS stage is biased in the weak-inversion region, the g_m profile has an expansive character. When it is combined with the compression character of the main CS stage in the strong-inversion region, large-signal linearity is improved in expectation. This configuration also is called a parallel class A and B mode in [22]. On the other hand, the main CS stage also constitutes a push-pull operation for enhanced large-signal performance in contrast to a single nMOS/pMOS stage, so does the auxiliary CS stage. Fig. 10 (a) has quantitatively sketched the simulated transconductance curves of the individual transistors of the main CS stage and auxiliary CS stage and their final combinations, where the horizontal axis is referred to the bias of Mn1. It is seen that the combined g_m value is more linear than individuals. Correspondingly, the large-signal linearity improvement then is verified in Section III.

When large blockers enter into the LNTA, transistors of the LNTA will periodically commutate between saturation, triode, and cut-off regions. Then the resulting effective transconductance reduces and input impedance increases, inevitably degrading the input reflection coefficient, S_{11}. Fortunately, the push-pull operation of the complementary main CS stage and auxiliary CS stage exhibits an excellent large-signal input matching performance with linear transconductance nearly irrespective of input signal strength.

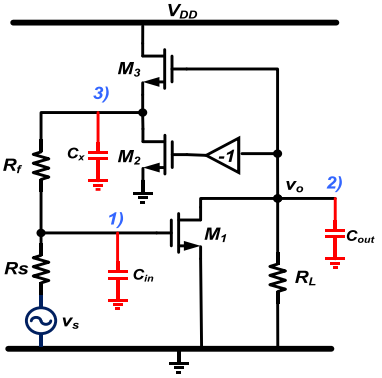

Fig. 12. Diagram of proposed LNTA with equivalent lumped capacitors.

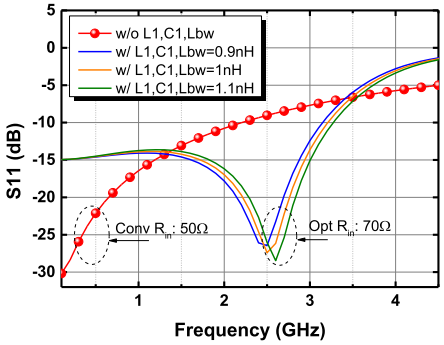

Fig. 13. Input reflection coefficient S_{11} with variations of bondwire inductance.

F. Bandwidth Optimization

As given in Fig. 12, parasitic capacitances of the proposed LNTA can be equivalent to three lumped capacitors in shunt

Authorized licensed use limited to: Zhengzhou University. Downloaded on February 18,2021 at 08:34:01 UTC from IEEE Xplore. Restrictions apply.

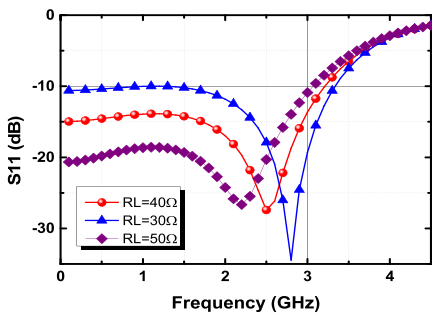

Fig. 14. Input reflection coefficient S_{11} with variations of load resistor R_L.

for the analysis convenience. Then the bandwidth range of the proposed LNTA is examined. And the resulted time constants related to the three equivalent lumped capacitors are shown as

$$\tau_1 = (R_{in} \parallel R_s)\, C_{in} \cong \frac{R_s}{2}\left[C_{gs1} + C_{gd1}\left(1 + |A_{v1}|\right)\right] \quad (15)$$

$$\tau_2 = R_L C_{out} \cong R_L \left[\begin{array}{l} C_{gd1}\left(1 + \dfrac{1}{|A_{v1}|}\right) + C_{db1} + C_{gs2} + C_{gd3} \\ + \left(C_{gd2} + C_{gs3}\right)\left(1 - |A_{v23}|\right) + C_L \end{array}\right] \quad (16)$$

$$\tau_3 = R_{eq} C_x \cong R_{eq}\left[C_{sb3} + C_{db2} + \left(C_{gd2} + C_{gs3}\right)\left(1 - \frac{1}{|A_{v23}|}\right)\right] \quad (17)$$

$$R_{eq} = \frac{R_f + R_s}{2\left(1 + g_{m3} R_f\right)} \quad (18)$$

where C_{in}, C_{out}, and C_x indicate the shunted parasitic capacitances at node 1∼3, respectively while C_L characterizes the input parasitics of the following buffer. Parameters C_{gs1}, C_{gd1}, C_{db1} are the gate-source capacitance, gate-drain capacitance, and drain-bulk capacitance of the CS stages. Then, C_{gs2}, C_{db2}, C_{gd3}, and C_{sb3} symbolize the gate-source and drain-bulk capacitance of M_2, and the gate-drain and source-bulk capacitance of M_3. A_{v1} is the voltage gain of the CS stages while A_{v23} is that of the active combiner and approaches unity by disregarding the load effect to the active combiner.

The gain bandwidth of the proposed LNTA thus is estimated by

$$BW_{3dB} = \frac{1}{2\pi \sum_{i=1}^{3} \tau_i}. \quad (19)$$

Based on extracted parasitic parameters, these time constants are calculated as $\tau_1 \sim \tau_3 = 31.1$, 11.3, and 0.13 ps. Due to the larger input parasitic equivalence of $C_{in} = 1.24$ pF, note that τ_1 is predominant one to constraint high-frequency bandwidth.

On the one hand, to alleviate the gain bandwidth limitation by τ_1, a neutralization technique is adopted to compensate for the Miller capacitance effect of the CS stages. Namely, the cross-coupled capacitors C_{ntr} are appended between the input and output ports of the CS stages to compensate for the contribution of $C_{gd1}\,(1 + |A_{v1}|)$ in (15). With this treatment, τ_1 can be reduced to 24.1 ps for improved bandwidth. On the other hand, a high-frequency pole by additional inductors resonating with the input parasitic C_{in} is designed to further mitigate the limitation resulted from τ_1. And these passive components are incorporated into the π-type network in Fig. 15(b) for input matching target, too, where on-chip bulky inductors are avoided.

Additionally, Fig. 13 indicates that by combining this matching network with the optimal input resistance of $R_{in} = 70\ \Omega$ (The resulted S_{11} is -15.6 dB for lower frequencies), an improved input matching bandwidth range for $S_{11} < -10$ dB can be achieved, although the ±10% inductance (L_{bw}) fluctuations of the bondwire yields the S_{11} bandwidth variations of ∼125 MHz. In contrast, the S_{11} bandwidth only covers 2.2 GHz if the conventional input resistance, R_{in} of 50 Ω is designed. Here, the extracted C_{in} equals 0.96 pF, and the parameters of $L_{bw} = 1$ nH and $R_{bw} = 1\ \Omega$ are assumed in simulations. Meanwhile, the off-chip components of inductor L_1 (3.0 nH) and capacitor C_1 (0.9 pF) are also used. Additionally, unlike a CG-CS LNTA, the input impedance of the proposed circuit is directly related to the load resistor, R_L as in (1). In practice, the R_L inevitably varies across a certain range which depends on the specified configuration of the following mixers and baseband TIAs. The sensitivity of the LNTA input impedance matching is examined by varying the R_L value between 30∼50 Ω. It corresponds to a R_{in} fluctuation of 58∼90 Ω when the parameters of $g_{m2} = 5.6$ mS and $R_f = 300\ \Omega$ are chosen as in Part C. The obtained results are further plotted in Fig. 14 where the π-type network parameters are kept the same as above. One can see even there is ±25% deviation from the nominal values of $R_L = 40\ \Omega$, the worst S_{11} bandwidth still covers a frequency range of 3 GHz.

III. Simulation and Measurement Results

The proposed differential linear LNTA based on the active-combiner feedback has been fabricated in standard 0.18-μm CMOS technology. Fig. 15(a) depicts the complete schematic of the circuit core where the neutralization technique via the cross-coupled capacitors, C_{ntr} between the input and output ports of the CS stages, is adopted to alleviate the Miller effect on bandwidth [12]. Meanwhile, Fig. 16 illustrates the micrograph of the LNTA with a size of 850 × 832 um^2 including the pads and the occupied core area is 0.07 mm^2. The LNTA core draws 13.3 mA from the supply voltage of 1.8 V. An off-chip balun with a ratio of 1: $\sqrt{2}$ converts the 50 Ω single-ended source resistance to 100 Ω differential one at the input port. A differential output buffer similar to that utilized in [9] has been integrated for a test purpose. The following reported measurements are de-embedded from the test buffer influence. And post-simulation results are also provided below for comparisons. Device parameters of the LNTA circuit are tabulated into Table 1, where the load resistance, R_L of 40 Ω is assumed to model the impedance

Authorized licensed use limited to: Zhengzhou University. Downloaded on February 18,2021 at 08:34:01 UTC from IEEE Xplore. Restrictions apply.

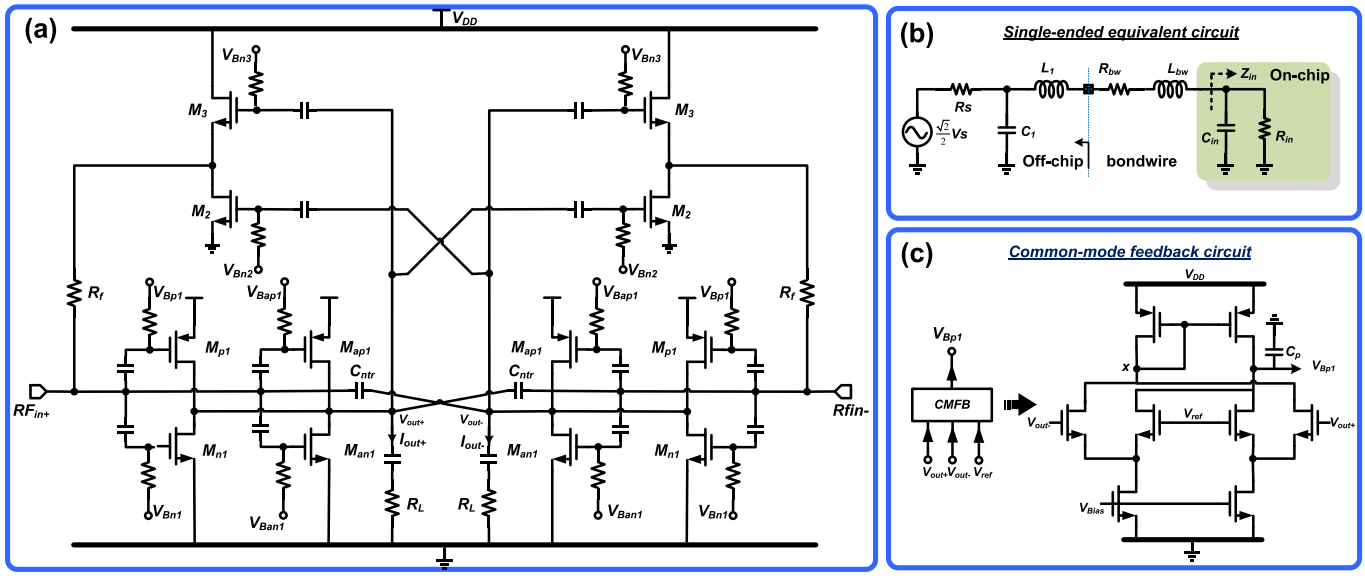

Fig. 15. (a) Complete schematic of proposed differential linear LNTA with active-combiner feedback. (b) Single-ended equivalent circuit for π-type input matching network. (c) Common-mode feedback circuit.

translated by the following receiver building blocks. In addition, a common-mode feedback (CMFB) circuit in Fig. 15(c) is adopted to maintain the output common-mode voltage around $V_{DD}/2$. Technically, the differential output signals $V_{out+/-}$ are detected and compared via two differential pairs with the reference bias V_{ref} at mid supply voltage. The resulting dc error signal is amplified and transferred to dynamically adjust the bias V_{Bp1} for transistors M_{p1}. Odd harmonics of $V_{out+/-}$ are cancelled each other at the summing net, x while even harmonics of that is inhibited by the capacitor C_p, not disturbing the function of main amplifiers. Current-mirrors are adopted for bias robustness regarding process-voltage-temperature (PVT) variations.

Fig. 17 shows the simulated and measured small-signal performance of S_{11} and G_m. In contrast to the S_{11} bandwidth of 2.2 GHz simulated in Fig. 13 without the adopted π-type passive network, the upper bound frequency for $S_{11} < -10$ dB is 3.1 GHz in the measurement. Thus a significant bandwidth expansion is obtained. Meanwhile, the transconductance curves in simulations and measurements agree with each other well, and the measured maximum G_m is 76.7 mS ascribed to the inductor peaking effect in (5). Fig. 18 manifests that the measured maximum S_{21} is only 7.2 dB since the LNTA is driving the small load resistance. The measured NF is below 3.4 dB throughout the operating frequency range and the minimum value is ~2.5 dB at 2.46 GHz. In view of there are multiple cross-connections in the presented circuit, the circuit stability needs to be checked carefully. Specifically, the stability is simulated by combining the LNTA and the output buffer together while the stability factors (K_f and Δ) are adopted and evaluated here. They will mean unconditional stability if $K_f > 1$ and $|\Delta| < 1$ are met for all frequencies [10]. As shown in Fig. 19, the minimum value of $K_f = 2.1$ is found at the high-frequency side and increases at low frequencies. Even there is a ±25% variation around

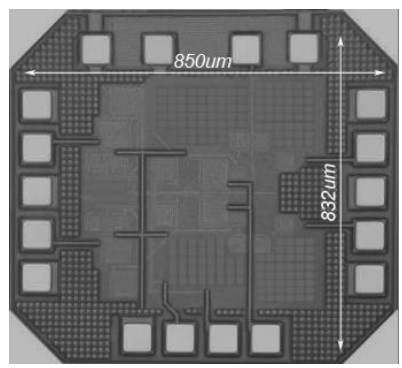

Fig. 16. Chip micrograph of proposed LNTA.

TABLE I
DEVICE PARAMETERS FOR THE PROPOSED LNTA

Devices	Value	Devices	Value
M_{n1}	80/0.18 (μm/μm)	M_2	12/0.18(μm/μm)
M_{p1}	176/0.18(μm/μm)	M_3	12/0.18(μm/μm)
M_{an1}	65/0. 18(μm/μm)	R_f	300 Ω
M_{ap1}	142/0. 18(μm/μm)	R_L	40 Ω

the nominal load of $R_L = 40\ \Omega$, the stability is still well maintained.

Besides the small-signal performance displayed above, the large-signal performance also needs to be checked for possible blockers interfering which is fairly common in wideband receivers. The related simulation and measurement are performed, respectively. By using the PSS and Pnoise analysis in Cadence Spectre-RF, large-signal noise behavior is examined. In Fig. 20, the simulation clearly depicts that the noise figure rises in proportion to the increased power level of a

Authorized licensed use limited to: Zhengzhou University. Downloaded on February 18,2021 at 08:34:01 UTC from IEEE Xplore. Restrictions apply.

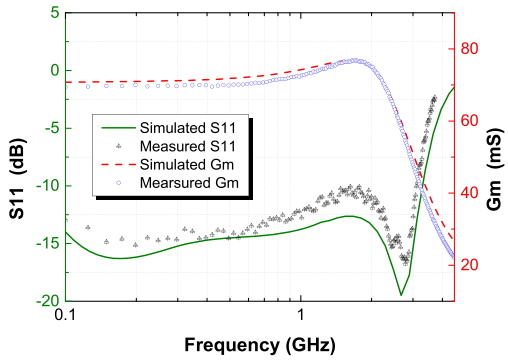

Fig. 17. Simulated and measured small-signal performance of S_{11} and G_m.

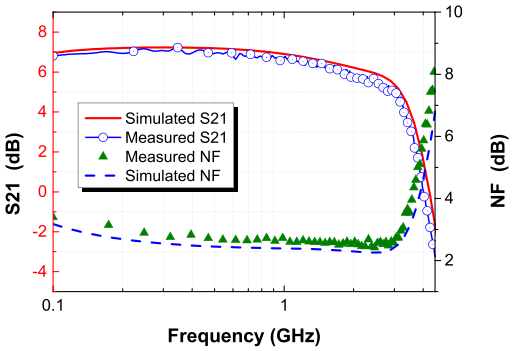

Fig. 18. Simulated and measured small-signal performance of S_{21} and NF.

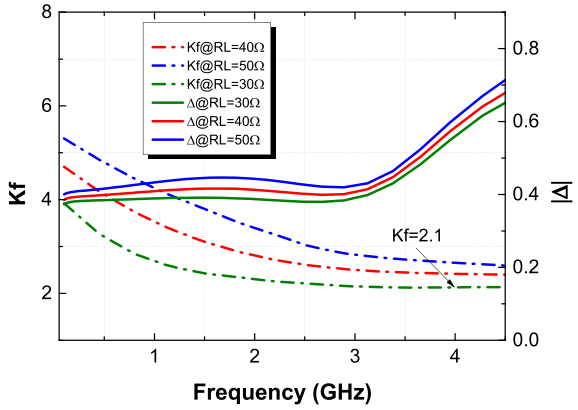

Fig. 19. Stability factors (K_f and Δ) with R_L variations versus RF frequency.

blocker interference. Especially, the simulated NF at 1.1 GHz is 3.7 dB in the presence of a 0 dBm blocker at 100 MHz frequency offset, which is degraded by about 1.2 dB compared to the small-signal NF. In contrast, the measured block NF is 4.0 dB and corresponds to a 1.4 dB deterioration compared to the measured small-signal NF.

Meanwhile, large-signal matching performance is also simulated (using the PSS and PSP simulators in Cadence Spectre-RF) and measured, respectively. The S_{11} result at 900 MHz with respect to the power level of the blocker at 1 GHz is also shown in Fig. 20. It again degrades when the blocker power increases and there is good agreement between the simulation and measurement. The measured S_{11} of the proposed LNTA

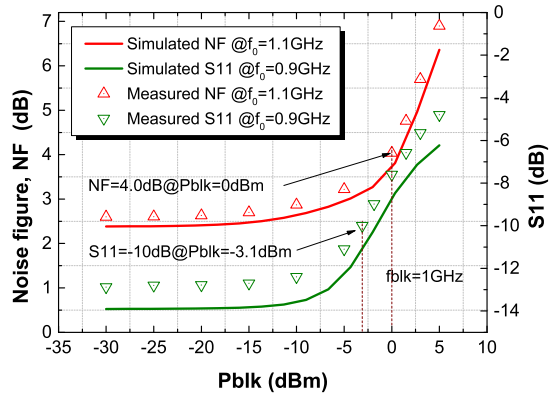

Fig. 20. Simulated and measured large-signal performance: NF and S_{11} with typical 100 MHz blocker frequency offset where the blocker interference frequency, f_{blk} takes 1 GHz.

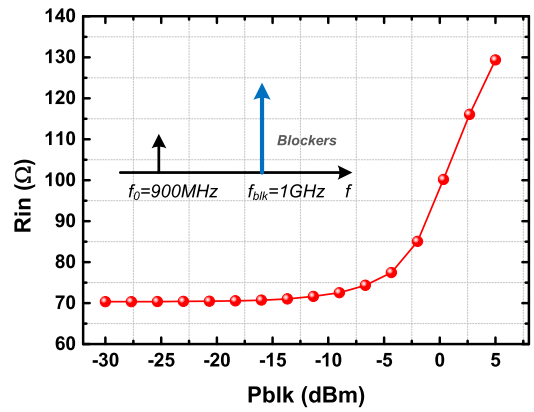

Fig. 21. Input resistance, R_{in} versus the blocker power level P_{blk} with typical 100 MHz frequency offset.

is still below −10 dB even with a blocker level of -3.1 dBm and then deteriorates to -7.6 dB with 0 dBm blocker input. Based on (4), the input resistance R_{in} has been converted from the S_{11} simulation result. The obtained R_{in} versus the blocker power level P_{blk} is displayed in Fig.21. The simulated results reveal that the proposed structure can sustain excellent matching performance in the presence of larger blocker input. It attributes to the linear transconductance provided by the push-pull CS stages, resulting in the equivalent input resistance, R_{in} weakly dependent on the input signal strength. This large-signal matching performance is meaningful since the current-mode receivers showing a poor S_{11} may become unstable and even collapse when handling strong blocker interferences. However, this is not considered in any previous reports, including [9] and [10].

Although the auxiliary CS stage is optimized for the small-signal linearity of IIP3, the large-signal linearity of IP_{1dB} being improved also appears as a derivative benefit due to the Class B operation of the auxiliary CS stage. Particularly, the simulated IP_{1dB} results with/without the complementary MGTR configurations are illustrated in Fig. 22. Thanks to the complementary MGTR configurations with Class B operation, the simulated IP_{1dB} is improved from 0.33 to 1.66 dBm

Authorized licensed use limited to: Zhengzhou University. Downloaded on February 18,2021 at 08:34:01 UTC from IEEE Xplore. Restrictions apply.

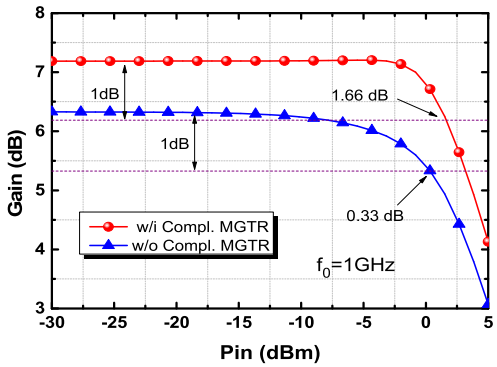

Fig. 22. Simulated IP_{1dB} at 1 GHz with/without complementary MGTR configurations.

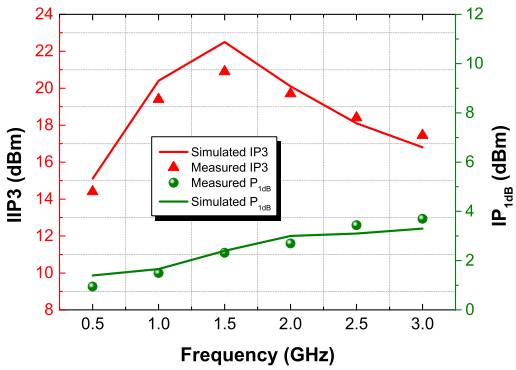

Fig. 23. Simulated and measured IIP3 and IP_{1dB} at different frequency inputs.

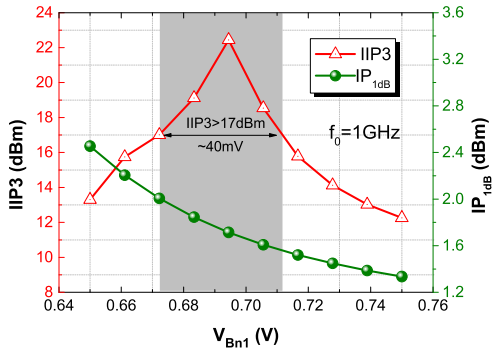

Fig. 24. Simulated IIP3 and IP_{1dB} versus the bias of main CS stage.

at 1 GHz. The limited improvement comes from a small transconductance value contributed by the weak-inversion-biased auxiliary CS stage.

Both small- and large-signal linearity performance of the proposed LNTA in wide bandwidth is further illustrated in Fig. 23. Across the passband, the measured IIP3 is larger than 14.4 dBm with a 10 MHz two-tone separation, and the measured IP_{1dB} is beyond 0.95 dBm. Especially, an IIP3 peak value of 20.9 dBm is measured at 1.5 GHz. And the measured average value of IIP3 and IP_{1dB} takes 17.8 and 2.3 dBm across the passband range. Simulations also indicate that without the auxiliary CS stage, the passband IIP3 roughly is below 10 dBm. To check the robustness of the linearity concerning bias variations, the IIP3 and IP_{1dB} are further simulated and shown in Fig. 24, where the observed frequency point takes the typical 1 GHz. Note that the optimal bias window of ∼40 mV exists for the IIP3 beyond 17 dBm. In comparison, the slowly changed IP_{1dB} curve versus the bias also justifies the auxiliary CS stage being optimized for the small-signal linearity of IIP3.

The robustness of the presented LNTA is further examined in terms of the interested performance of noise and linearity. Fig. 25 shows simulated curves of the NF, IIP3, and IP_{1dB} performance at typical frequency points of 1 and 3 GHz across temperature and process variations. Specifically, a temperature range of −20∼80 °C is scanned. And the process corner scenarios of the slow–slow (SS), typical–typical (TT), and fast–fast (FF) are included while the 10-MHz tone separation is used again for the IIP3 plot results. The worst NF degradation is within 0.6 dB compared to the normal condition (TT and 27 °C) over all variations. And the observed NF is less than 3.1 dB in all cases as shown in Fig. 25(a). The NF is improved at low temperature and it deteriorates at high temperatures, which is commonly expected. In the case of linearity, more than a 13.7 dBm IIP3 can be obtained for the LNTA irrespective of the process and temperature variations as shown in Fig. 25(b). Notice that the IIP3 shows up apparent degenerations over the process and temperature variations in contrast to the value under the typical condition (TT, 27 °C). It can be ascribed to the mismatched n/pMOS due to the carriers' mobility variations, accompanying the temperature and process change. Then by trimming at a fixed bias the transconductance of CMOS devices and high-order derivatives of that, the employed MGTR technique in stacked structure inevitably gets sensitive to this change. Moreover, the IP_{1dB} fluctuation of −1.4 ∼ +1.0 dB is seen in Fig. 25(c) across all variations compared to the normal condition (TT and 27 °C). The difference between IIP3 and IP1dB is commonly larger than the conventional 10 dB in theory, due to the above-mentioned IIP3 improvement technique. Thanks to the current mirror bias adopted in the design, the variations of the linearity and noise performances are overall acceptable and robustness of the proposed circuit is manifested.

Table 2 benchmarks the performance of the proposed LNTA with related state-of-the-art reports. A figure-of-merit (FOM) definition in (20) is employed here for fair comparison among different designs [24]. With additional bandwidth consideration, the FOM_1 is extended to the FOM_2 below suitable for comparisons of wideband circuits. Among various LNTAs, [4] reports the highest value of IP3 and FOM_1 but also the most inductor numbers. And it also does not apply to wideband systems. Mehrpoo and Staszewski [9] achieve good linearity by integrating the N-path filter but the NF is the largest among the LNTA designs. Chen *et al.* [24] have lower power efficiency due to the SF feedback structure. Moreover, There are more stacked components from supply to ground in [10], [23] which leads to a certain sacrifice of load headroom and linearity, although good IIP3 is obtained in [10] and an integrated active

Authorized licensed use limited to: Zhengzhou University. Downloaded on February 18,2021 at 08:34:01 UTC from IEEE Xplore. Restrictions apply.

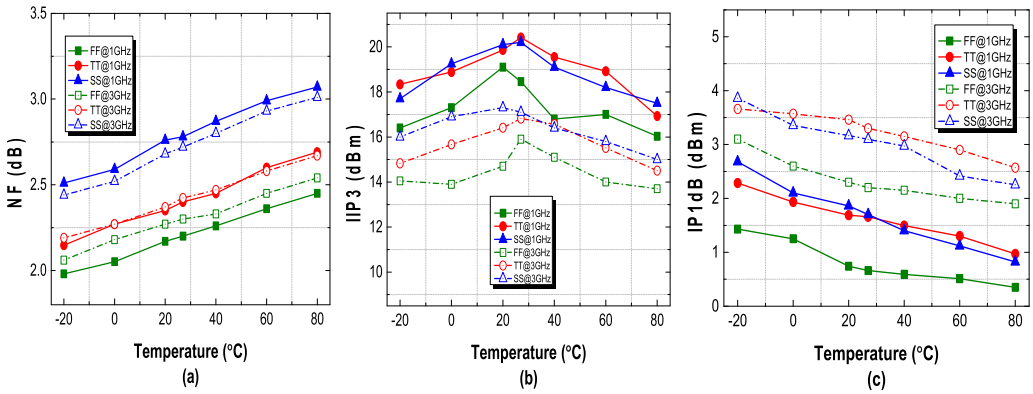

Fig. 25. Simulated process and temperature variations of (a) NF, (b) IIP3, and (c) IP_{1dB}. Parameters of TT, SS, and FF denote typical-typical, slow-slow, and fast-fast models, respectively.

TABLE II

PERFORMANCE SUMMARY AND COMPARISONS

Parameter	[4] [a] TCAS12	[9] RFIC14	[10] TMTT14	[23][a] PRIME17	[24] [a] ISCAS16	**This work**	[26] JSSC11	[27] TCAS19	[28] JSSC12	[29] ISSCC17	[30] JSSC18
CMOS (nm)	90	65	45	40	180	**180**	65	40	40	28	45^
Diff. input	Y	N	Y	S-D◊	Y	**Y**	Y	Y	N	Y	Y
Architecture	CG	CG-CS	CG-CS	CG-CS	ACT♯	**ACT♯**	CM-RX	CM-RX	NC-RX	N-path-RX	MF-RX
NO. of on-chip ind.	3	2	0	0	0	**0**	6	2	0	0	0
Off-chip balun	Y	N	Y	N	Y	**Y**	N	Y	N	Y	Y
Frequency (GHz)	NA	0.8–2.2	0.1–2	0.1–1	0.2–3.2	**0.1–3.1**	0.87-2	3-6	0.08-2.7	0.1-2	0.2-8
G_m (mS)	20	75	36.5	38†	81	**76.7**	77.8$	12.5-14.5$	72$	16$	21$
NF (dB)	1.8	6.5	3–4.5	<2.6	2.4–3.06	**2.5–3.4**	8	5.0-5.8	1.9	6.3	2.3-5.4
Blocker NF[b] (dB)	NA	8.5[a]	NA	NA	3.1	**4.0**	11.4	5.9♀	4.1	8.1	4.7
Blocker s11[b] (dB)	NA	NA	NA	NA	NA	**-7.6**	NA	NA	NA	NA	NA
IIP3 (dBm)	32.8	13	10.8	1	20.8	**17.8**	-12.4	15.1-16.7	7*	22*	5*
IP_{1dB} (dBm)	NA	NA	0	NA	4.14	**2.3**	NA	3.0-3.9	NA	NA	NA
Supply (V)	1.5	1.5	2.2	1.8	1.8	**1.8**	1.3	1.8	1.3	1.2/1.0	1.2
Power (mW)	8.1	11.25	30.2	3	32.8	**23.9**	NA	69.6♠	35.1-78	38-96	50°
Area (mm^2)	NA	NA	0.06	NA	0.068	**0.07**	2.4	1.23	1.2	0.49	0.8
FOM[1]	39.6	15.8	11.6	12.4	26	**24**	NA	NA	NA	NA	NA
FOM[2]	NA	17.3	14.4	12.9	30.8	**28.7**	NA	NA	NA	NA	NA

[a] simulation results, [b] for 0 dBm blocker, †estimation, ◊ inbuilt balun, ♯active-feedback. $voltage gain in decibels, *results at tone spacing: 10 MHz, ♀results at tone spacing: 400 MHz, ♠ for I-channel only, ^silicon-on-insulator (SOI) process, °w/o clock generator power.

balun presented in [23], respectively.

$$FOM_1 = 10Log10\left(\frac{G_m[mS]\cdot IIP3[mW]}{P_{DC}[mW]\cdot(F_{min}-1)}\right) \quad (20)$$

$$FOM_2 = 10Log10\left(\frac{BW[GHz]\cdot G_m[mS]\cdot IIP3[mW]}{P_{DC}[mW]\cdot(F_{min}-1)}\right) \quad (21)$$

Besides the CM-RX architecture targeting for the SAW-less receivers, there is also a mixer-first receiver (MF-RX) architecture with excellent capability of handling blocker interferences. These related receiver reports are also tabulated into the table. Specifically, The CM-RX [26] and N-path-RX [29] with embedded N-path filters bring out a larger noise figure. In the noise-cancelling receiver (NC-RX) [28], an additional noise-cancelling path is appended to cancel the MF-RX noise along the main path and achieves significantly low noise. Meanwhile, based on the similar MF-RX structure, Lien *et al.* [30] achieve low NF by designing an extremely small turn-on resistance of switches with fairly large mixer sizing, and the low-noise baseband amplifiers.

In contrast, the CM-RX architecture renders low NF under lower power consumption since the RX's current is mainly burnt by the LNTA, and the TIA usually consumes the power, typically as low as several mWs (if a baseband bandwidth of <10 MHz is assumed and an ordinary two-stage opamp is used). More recently, its out-of-band IIP3 also could be well maintained if the baseband TIA filtering is properly designed [27]. Consequently, to address in-band interference, a highly linear LNTA becomes important if the passive mixers are highly linear and the baseband current-mode TIA provides a large dynamic range. In this perspective, it is still beneficial to design LNTAs with optimized in-band IIP3,

Authorized licensed use limited to: Zhengzhou University. Downloaded on February 18,2021 at 08:34:01 UTC from IEEE Xplore. Restrictions apply.

noise, bandwidth, and power dissipation, to guarantee the competitive systematic performance of the CM-RXs. Although larger supply voltage is used for the proposed circuit, accompanied by more abundant load headroom and better IIP3 expectation, the complimentary MGTR configurations adopted in the design generally gains a significant advantage of IIP3 linearity. In sum, the proposed LNTA within a compact size has achieved a prominent FOM advantage in terms of large transconductance and excellent IIP3 linearity besides the competitive NF and even S_{11} under blocker interferences.

IV. Conclusion

A highly linear wideband differential LNTA with active-combiner feedback and complementary MGTR configurations is proposed. The complementary MGTR configurations and push-pull operation of the main CS and auxiliary CS stages have assisted the achievement of both small-signal and large-signal linearity enhancement. The proposed wideband LNTA becomes a competitive candidate for SAW-less time-division duplexing and frequency-division duplexing system applications.

Appendix

According to Fig.9, we can express the signals, vi and vi', at differential input nodes as nonlinear polynomial expansions related to the input source signal, vs

$$\begin{cases} v_i = a_1 v_s + a_2 v_s^2 + a_3 v_s^3 \\ v_i' = -a_1 v_s + a_2 v_s^2 - a_3 v_s^3 \end{cases} \tag{A1}$$

where $a_1 \sim a_3$ are the linear gain, second-order, and third-order nonlinear coefficients, respectively. The Taylor expansions only consider up to the third-order nonlinear components for simplicity and the below is the same unless other stated. Moreover, at differential output nodes of v_o and v_o', we can have

$$\begin{cases} v_o = -\left(g_{m1} v_i + \frac{g'_{m1}}{2} v_i^2 + \frac{g''_{m1}}{6} v_i^3\right) R_L \\ v_o' = -\left(g_{m1} v_i' + \frac{g'_{m1}}{2} v_i'^2 + \frac{g''_{m1}}{6} v_i'^3\right) R_L. \end{cases} \tag{A2}$$

Similar to the definitions for the composite transistor M_1, the specific meaning of g'_{mi} and g''_{mi} (i takes 2 and 3) can be found for transistors, M_2 and M_3, respectively. The nonlinear current of the CS stages and active combiner is determined by

$$g'_{mi} = \left.\frac{\partial^2 i_{DS}}{\partial v_{GS}^2}\right|_Q, \quad g''_{mi} = \left.\frac{\partial^3 i_{DS}}{\partial v_{GS}^3}\right|_Q. \tag{A3}$$

Furthermore, applying Taylor expansion at v_f node leads to

$$v_f = f_1 v_s + f_2 v_s^2 + f_3 v_s^3. \tag{A4}$$

Subsequently, by applying Kirchhoff's current law at v_i and v_f nodes of the circuit in Fig. 9, respectively, the below equations are obtained

$$\begin{aligned} \frac{v_f - v_s}{R_f + R_s} &= g_{m3}\left(v_o - v_f\right) + \frac{g'_{m3}}{2}\left(v_o - v_f\right)^2 + \frac{g''_{m3}}{6}\left(v_o - v_f\right)^3 \\ &\quad - \left(g_{m2} v_o' + \frac{g'_{m2}}{2} v_o'^2 + \frac{g''_{m2}}{6} v_o'^3\right), \end{aligned} \tag{A5}$$

$$\frac{v_f - v_s}{R_f + R_s} = \frac{v_i - v_s}{R_s}. \tag{A6}$$

Then, replacing (A1) and (A4) into (A6) leads to

$$\begin{cases} \frac{a_1 - 1}{R_s} = \frac{f_1 - 1}{R_f + R_s} \\ \frac{a_2}{R_s} = \frac{f_2}{R_f + R_s} \\ \frac{a_3}{R_s} = \frac{f_3}{R_f + R_s}. \end{cases} \tag{A7}$$

Furthermore, substituting (A1), (A2), and (A4) into (A5) leads to an equation with the Taylor series expansions of v_s appearing at both sides. Then, by equalling the corresponding first-, second-, and third-order coefficients for the Taylor expansions, the below equations are obtained

$$\begin{aligned} \frac{f_1 - 1}{R_f + R_s} &= -\left[g_{m3}\left(g_{m1} a_1 R_L + f_1\right) + g_{m2} g_{m1} a_1 R_L\right] \\ \frac{f_2}{R_f + R_s} &= -g_{m3}\left[\left(g_{m1} a_2 + \frac{1}{2} g'_{m1} a_1^2\right) R_L + f_2\right] \\ &\quad + \frac{1}{2} g'_{m3}\left(g_{m1} a_1 R_L + f_1\right)^2 \\ &\quad + g_{m2}\left(g_{m1} a_2 + \frac{1}{2} g'_{m1} a_1^2\right) R_L \\ &\quad - \frac{1}{2} g'_{m2}\left(g_{m1} a_1 R_L\right)^2 \\ \frac{f_3}{R_f + R_s} &= -g_{m3}\left[\left(g_{m1} a_3 + g'_{m1} a_1 a_2 + \frac{1}{6} g''_{m1} a_1^3\right) R_L + f_3\right] \\ &\quad + g'_{m3}\left(g_{m1} a_1 R_L + f_1\right) \\ &\quad \times \left[\left(g_{m1} a_2 + \frac{1}{2} g'_{m1} a_1^2\right) R_L + f_2\right] \\ &\quad - \frac{1}{6} g''_{m3}\left(g_{m1} a_1 R_L + f_1\right)^3 \\ &\quad - g_{m2}\left(g_{m1} a_3 + g'_{m1} a_1 a_2 + \frac{1}{6} g''_{m1} a_1^3\right) R_L \\ &\quad + g'_{m2} g_{m1} a_1 R_L \left(g_{m1} a_2 + \frac{1}{2} g'_{m1} a_1^2\right) R_L \\ &\quad - \frac{1}{6} g''_{m2}\left(g_{m1} a_1 R_L\right)^3. \end{aligned} \tag{A8}$$

As a result, combining (A7) and (A8) leads to the closed-form $a_1 \sim a_3$ below, (A9), as shown at the top of the next page. By using the input matching condition in (1), it is easy to verify a1 collapses to 1/2 in our expectation.

On the other hand, we have a differential output current

$$\begin{aligned} i_{o,diff} &= \frac{i_o - i_o'}{2} = \frac{v_o - v_o'}{2R_L} \\ &= -g_{m1} a_1 v_s - \left(g_{m1} a_3 + g'_{m1} a_1 a_2 + \frac{1}{6} g''_{m1} a_1^3\right) v_s^3. \end{aligned} \tag{A10}$$

Note that the circuit is with the cancelled second-order distortion due to the differential operation. Then, the IIP3 expression is estimated as

$$A_{IIP3} = \sqrt{\frac{4}{3}\left|\frac{g_{m1} a_1}{g_{m1} a_3 + g'_{m1} a_1 a_2 + \frac{1}{6} g''_{m1} a_1^3}\right|}. \tag{A11}$$

Authorized licensed use limited to: Zhengzhou University. Downloaded on February 18,2021 at 08:34:01 UTC from IEEE Xplore. Restrictions apply.

$$
\begin{aligned}
a_1 &= \frac{1+g_{m3}R_f}{1+g_{m3}\left(R_f+R_s\right)+R_s\left(g_{m2}+g_{m3}\right)g_{m1}R_L} \\
a_2 &= \frac{1}{4R_s g_{m3}\left(1+g_{m1}R_L\right)}\left\{\begin{array}{l}\left(g_{m2}-g_{m3}\right)g'_{m1}a_1^2R_sR_L \\ +R_s\left(g_{m1}a_1R_L\right)^2\left[g'_{m3}\left(1+\dfrac{f_1}{g_{m1}a_1R_L}\right)^2-g'_{m2}\right]\end{array}\right\} \\
a_3 &= \frac{R_s}{2\left(1+g_{m3}R_f\right)}\left\{\begin{array}{l}-\left(g_{m2}+g_{m3}\right)\left(g'_{m1}a_1a_2+\dfrac{1}{6}g''_{m1}a_1^3\right)R_L-\dfrac{1}{6}g''_{m3}\left(g_{m1}a_1R_L+f_1\right)^3 \\ -\dfrac{1}{6}g''_{m2}\left(g_{m1}a_1R_L\right)^3+a_2\dfrac{R_f+R_s}{R_s}g'_{m3}\left(g_{m1}a_1R_L+f_1\right) \\ +\left[g'_{m3}\left(g_{m1}a_1R_L+f_1\right)+g'_{m2}g_{m1}a_1R_L\right]\left(g_{m1}a_2+\dfrac{1}{2}g'_{m1}a_1^2\right)R_L\end{array}\right\}.
\end{aligned}
\tag{A9}
$$

Replacing (A9) into (A10) renders the interested equation below, characterizing nonlinearity and yet to be minimized

$$
\begin{aligned}
&g_{m1}a_3+g'_{m1}a_1a_2+\frac{1}{6}g''_{m1}a_1^3 \\
&=\frac{1}{6}g''_{m1}a_1^3-\frac{1}{12}\frac{g_{m1}R_S}{(1+g_{m1}R_f)}[(g_{m2}+g_{m3})g''_{m1}a_1^3R_L \\
&\quad+g''_{m3}(g_{m1}a_1R_L+f_1)^3+g''_{m2}(g_{m1}a_1R_L)^3] \\
&\quad+\frac{1}{4}\frac{g_{m1}R_Sg'_{m1}a_1^2R_L}{(1+g_{m3}R_f)}[g'_{m3}(g_{m1}a_1R_L+f_1)+g'_{m2}g_{m1}a_1R_L] \\
&\quad+\frac{1}{8}\frac{g'^2_{m1}a_1^3R_L}{g_{m3}(1+g_{m1}R_L)}(1+\frac{g_{m3}R_S}{1+g_{m3}R_f})(g_{m2}-g_{m3}) \\
&\quad+\frac{1}{8}\frac{a_1(g_{m1}a_1R_L)^2}{g_{m3}(1+g_{m1}R_L)} \\
&\quad\times\{g'_{m1}g'_{m2}[\frac{g_{m1}(g_{m2}-g_{m3})R_SR_L-g_{m3}R_S}{1+g_{m3}R_f}-1] \\
&\quad+g'_{m1}g'_{m3}(1+\frac{f_1}{g_{m1}a_1R_L})[(\frac{g_{m3}R_S}{1+g_{m3}R_f}+1)(1+\frac{f_1}{g_{m1}a_1R_L}) \\
&\quad+\frac{2(g_{m2}-g_{m3})}{g_{m1}}(\frac{R_f+R_S}{R_S}+\frac{g_{m1}^2R_SR_L}{2(1+g_{m3}R_f)})]\} \\
&\quad+\frac{1}{8}\frac{(g_{m1}a_1R_L)^3}{g_{m3}(1+g_{m1}R_L)}[g'_{m3}(1+\frac{f_1}{g_{m1}a_1R_L})^2-g'_{m2}] \\
&\quad\times[2g'_{m3}(1+\frac{f_1}{g_{m1}a_1R_L})(\frac{R_f+R_S}{R_S}+\frac{g_{m1}^2R_SR_L}{2(1+g_{m3}R_f)}) \\
&\quad+\frac{g'_{m2}g_{m1}^2R_SR_L}{(1+g_{m3}R_f)}].
\end{aligned}
\tag{A12}
$$

ACKNOWLEDGMENT

The authors would like to express gratitude to Dr. Dario Prevedelli in the Microelectronics Group, University of Pavia, Italy, for the useful discussions and measurement assistance. They also expressed the heartfelt thanks to the valuable comments by anonymous reviewers.

REFERENCES

[1] Z. Ru, N. A. Moseley, E. Klumperink, and B. Nauta, "Digitally enhanced software-defined radio receiver robust to out-of-band interference," *IEEE J. Solid-State Circuits*, vol. 44, no. 12, pp. 3359–3375, Dec. 2009.

[2] I. Fabiano, M. Sosio, A. Liscidini, and R. Castello, "SAW-less analog front-end receivers for TDD and FDD," *IEEE J. Solid-State Circuits*, vol. 48, no. 12, pp. 3067–3079, Dec. 2013.

[3] M. Ramella, I. Fabiano, D. Manstretta, and R. Castello, "A SAW-less 2.4-GHz receiver front-end with 2.4-mA battery current for SoC coexistence," *IEEE J. Solid-State Circuits*, vol. 52, no. 9, pp. 2292–2305, Sep. 2017.

[4] E. A. Keehr and A. Hajimiri, "A wide-swing low-noise transconductance amplifier and the enabling of large-signal handling direct-conversion receivers," *IEEE Trans. Circuits Syst. I, Reg. Papers*, vol. 59, no. 1, pp. 30–43, Jan. 2012.

[5] S. C. Blaakmeer, E. A. M. Klumperink, D. M. W. Leenaerts, and B. Nauta, "Wideband balun-LNA with simultaneous output balancing, noise-canceling and distortion-canceling," *IEEE J. Solid-State Circuits*, vol. 43, no. 6, pp. 1341–1350, Jun. 2008.

[6] W.-H. Chen, G. Liu, B. Zdravko, and A. M. Niknejad, "A highly linear broadband CMOS LNA employing noise and distortion cancellation," *IEEE J. Solid-State Circuits*, vol. 43, no. 5, pp. 1164–1176, May 2008.

[7] C.-F. Liao and S.-I. Liu, "A broadband noise-canceling CMOS LNA for 3.1–10.6-GHz UWB receivers," *IEEE J. Solid-State Circuits*, vol. 42, no. 2, pp. 329–339, Feb. 2007.

[8] D. Im, I. Nam, H.-T. Kim, and K. Lee, "A wideband CMOS low noise amplifier employing noise and IM2 distortion cancellation for a digital TV tuner," *IEEE J. Solid-State Circuits*, vol. 44, no. 3, pp. 686–698, Mar. 2009.

[9] M. Mehrpoo and R. B. Staszewski, "A highly selective LNTA capable of large-signal handling for RF receiver front-ends," in *Proc. IEEE Radio Freq. Integr. Circuits Symp. (RFIC)*, Jun. 2013, pp. 185–188.

[10] H. M. Geddada, C.-T. Fu, J. Silva-Martinez, and S. S. Taylor, "Wideband inductorless low-noise transconductance amplifiers with high large-signal linearity," *IEEE Trans. Microw. Theory Techn.*, vol. 62, no. 7, pp. 1495–1505, Jul. 2014.

[11] J. Borremans, P. Wambacq, C. Soens, Y. Rolain, and M. Kuijk, "Low-area active-feedback low-noise amplifier design in scaled digital CMOS," *IEEE J. Solid-State Circuits*, vol. 43, no. 11, pp. 2422–2433, Nov. 2008.

[12] T. Chang, J. Chen, L. A. Rigge, and J. Lin, "ESD-protected wideband CMOS LNAs using modified resistive feedback techniques with chip-on-board packaging," *IEEE Trans. Microw. Theory Techn.*, vol. 56, no. 8, pp. 1817–1826, Aug. 2008.

[13] P.-I. Mak and R. Martins, "Design of an ESD-protected ultra-wideband LNA in nanoscale CMOS for full-band mobile TV tuners," *IEEE Trans. Circuits Syst. I, Reg. Papers*, vol. 56, no. 5, pp. 933–942, May 2009.

[14] B. Razavi, *RF Microelectronics*, 2nd ed. Upper Saddle River, NJ, USA: Prentice-Hall, 2011.

[15] R. Ramzan, S. Andersson, J. Dabrowski, and C. Svensson, "A 1.4 V 25 mW inductorless wideband LNA in 0.13μm CMOS," in *IEEE Int. Solid-State Circuits Conf. (ISSCC) Dig. Tech. Papers*, Feb. 2007, pp. 424–613.

[16] W. M. C. Sansen, *Analog Design Essentials*. Dordrecht, The Netherlands: Springer, 2006.

[17] T. W. Kim, B. Kim, and K. Lee, "Highly linear receiver front-end adopting MOSFET transconductance linearization by multiple gated transistors," *IEEE J. Solid-State Circuits*, vol. 39, no. 1, pp. 223–229, Jan. 2004.

[18] I. Nam, B. Kim, and K. Lee, "CMOS RF amplifier and mixer circuits utilizing complementary characteristics of parallel combined NMOS and PMOS devices," *IEEE Trans. Microw. Theory Techn.*, vol. 53, no. 5, pp. 1662–1671, May 2005.

Authorized licensed use limited to: Zhengzhou University. Downloaded on February 18,2021 at 08:34:01 UTC from IEEE Xplore. Restrictions apply.

[19] B.-K. Kim, D. Im, J. Choi, and K. Lee, "A highly linear 1 GHz 1.3 dB NF CMOS low-noise amplifier with complementary transconductance linearization," *IEEE J. Solid-State Circuits*, vol. 49, no. 6, pp. 1286–1302, Jun. 2014.

[20] H. Zhang and E. Sanchez-Sinencio, "Linearization techniques for CMOS low noise amplifiers: A tutorial," *IEEE Trans. Circuits Syst. I, Reg. Papers*, vol. 58, no. 1, pp. 22–36, Jan. 2011.

[21] T. W. Kim, "A common-gate amplifier with transconductance nonlinearity cancellation and its high-frequency analysis using the volterra series," *IEEE Trans. Microw. Theory Techn.*, vol. 57, no. 6, pp. 1461–1469, Jun. 2009.

[22] Y. Ding and R. Harjani, "A high-efficiency CMOS +22-dBm linear power amplifier," *IEEE J. Solid-State Circuits*, vol. 40, no. 9, pp. 1895–1900, Sep. 2005.

[23] A. Coccia, D. Manstretta, and R. Castello, "A TVWS LNTA with balanced output employing a low-noise current multiplier," in *Proc. 13th Conf. Ph.D. Res. Microelectron. Electron. (PRIME)*, Giardini Naxos, Jun. 2017, pp. 45–48.

[24] J. Chen, B. Guo, B. Zhang, and G. Wen, "A 4 dBm IP1dB 20.8 dBm UP3 wideband complementary SF feedback LNTA with derivative superposition method," in *Proc. IEEE Int. Symp. Circuits Syst. (ISCAS)*, Montreal, QC, Canada, May 2016, pp. 2122–2125.

[25] D. Im, "A +9-dBm output P1db active feedback CMOS wideband LNA for SAW-less receivers," *IEEE Trans. Circuits Syst. II, Exp. Briefs*, vol. 60, no. 7, pp. 377–381, Jul. 2013.

[26] A. Mirzaei, H. Darabi, A. Yazdi, Z. Zhou, E. Chang, and P. Suri, "A 65 nm CMOS quad-band saw-less receiver SoC for GSM/GPRS/EDGE," *IEEE J. Solid-State Circuits*, vol. 46, no. 4, pp. 946–950, Apr. 2011.

[27] J. Jiang, J. Kim, A. I. Karsilayan, and J. Silva-Martinez, "A 3-6-GHz highly linear I-channel receiver with over +3.0-dBm in-band p1dB and 200-MHz baseband bandwidth suitable for 5G wireless and cognitive radio applications," *IEEE Trans. Circuits Syst. I, Reg. Papers*, vol. 66, no. 8, pp. 3134–3147, Aug. 2019.

[28] D. Murphy *et al.*, "A blocker-tolerant, noise-cancelling receiver suitable for wideband wireless applications," *IEEE J. Solid-State Circuits*, vol. 47, no. 12, pp. 2943–2963, Dec. 2012.

[29] Y. Lien, E. Klumperink, B. Tenbroek, J. Strange, and B. Nauta, "A high-linearity CMOS receiver achieving +44dBm IIP3 and +13dBm B1dB for SAW-less LTE radio," in *IEEE Int. Solid-State Circuits Conf. (ISSCC) Dig. Tech. Papers*, Feb. 2017, pp. 412–413.

[30] Y.-C. Lien, E. A. M. Klumperink, B. Tenbroek, J. Strange, and B. Nauta, "Enhanced-selectivity high-linearity low-noise mixer-first receiver with complex pole pair due to capacitive positive feedback," *IEEE J. Solid-State Circuits*, vol. 53, no. 5, pp. 1348–1360, May 2018.

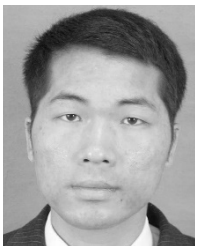

Benqing Guo (Member, IEEE) was born in Henan, China, in 1977. He received the M.Sc. and Ph.D. degrees in electrical engineering from the University of Electronic Science and Technology of China (UESTC), Chengdu, China, in 2005 and 2011, respectively.

He had multiple years of industry experience in the development of hardware systems and integrated circuits. Since 2014, he has been conducting research work on integrated circuits in UESTC. He worked as a Visiting Scholar at the Microelectronics Group, University of Pavia, Italy, from 2017 to 2018. He joined the Chengdu University of Information Technology in 2020, where he is currently a Researcher. His research interest includes RF/analog integrated circuits and techniques. He has served as a Technical Reviewer for over 25 international journals and conferences, including the IEEE JOURNAL OF SOLID-STATE CIRCUITS, IEEE TRANSACTIONS ON CIRCUITS AND SYSTEMS—I: REGULAR PAPERS, IEEE TRANSACTIONS ON MICROWAVE THEORY AND TECHNIQUES, IEEE TRANSACTIONS ON VERY LARGE SCALE INTEGRATION (VLSI) SYSTEMS, the IEEE International Symposium on Circuits and Systems, and so on.

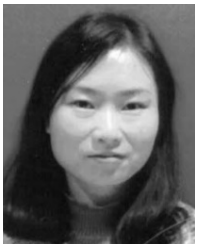

Jing Gong received the M.Sc. and Ph.D. degrees in biomedical engineering and technology from Sichuan University, Chengdu, China, in 2003 and 2008, respectively. She is currently a Technical Staff of the West China Hospital, Sichuan University. Her research interests include biomedical engineering designs and manufactures, such as implantable cardiovascular devices and surgical medical equipment.

Yao Wang (Member, IEEE) was born in Henan, China, in 1983. He received the M.S. degree from Zhengzhou University, Zhengzhou, China, in 2009, and the Ph.D. degree from the University of Electronic Science and Technology of China (UESTC), Chengdu, China, in 2013.

From 2014 to 2017, he was a Lecturer with UESTC and he joined Zhengzhou University. Since 2018, he has been an Associate Professor with the School of Information Engineering, Zhengzhou University. His research interests include the IoT integrated circuits, low-power analog, and mixed-signal integrated circuits.

Authorized licensed use limited to: Zhengzhou University. Downloaded on February 18,2021 at 08:34:01 UTC from IEEE Xplore. Restrictions apply.