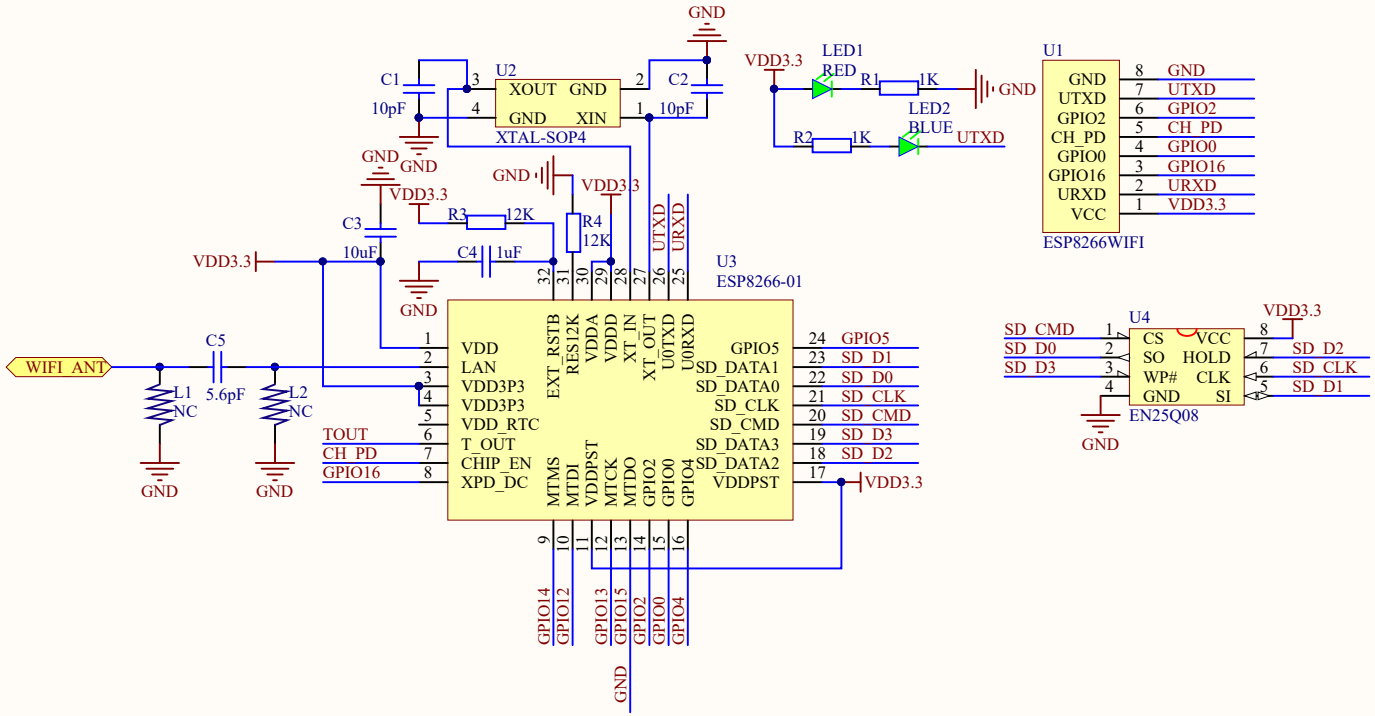

Title		
Size A4	Number	Revision
Date: 2020/5/18		Sheet of
File: J:\MRYZ\..\Sheet1.SchDoc		Drawn By: