# PZ-HC05 蓝牙模块

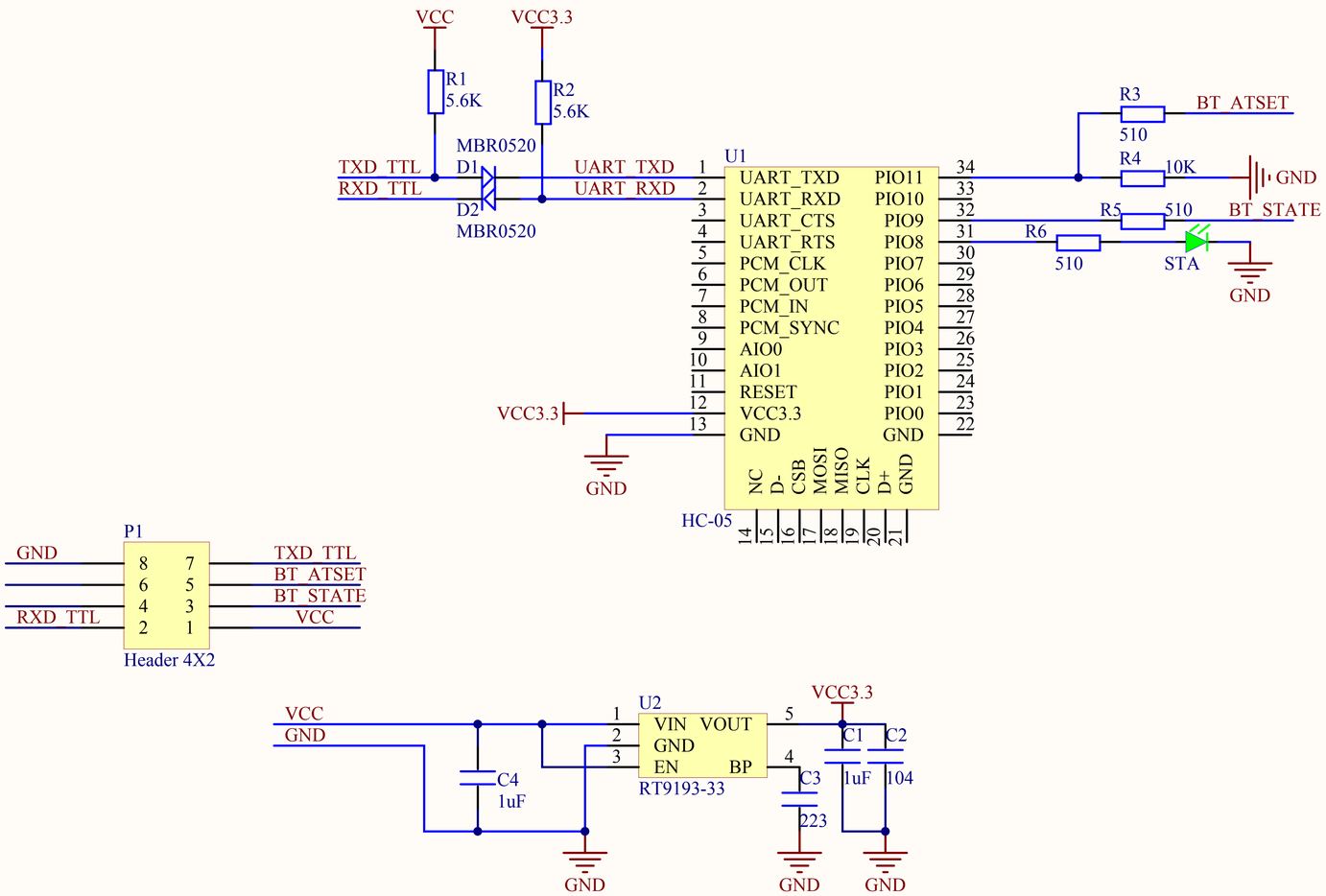


| | | |
|---|---|---|
| Title | | |
| Size A4 | Number | Revision |
| Date: 2017-05-24 | | Sheet of |
| File: G:\MRYZ\..\HC05_Sheet1.SchDoc | | Drawn By: |