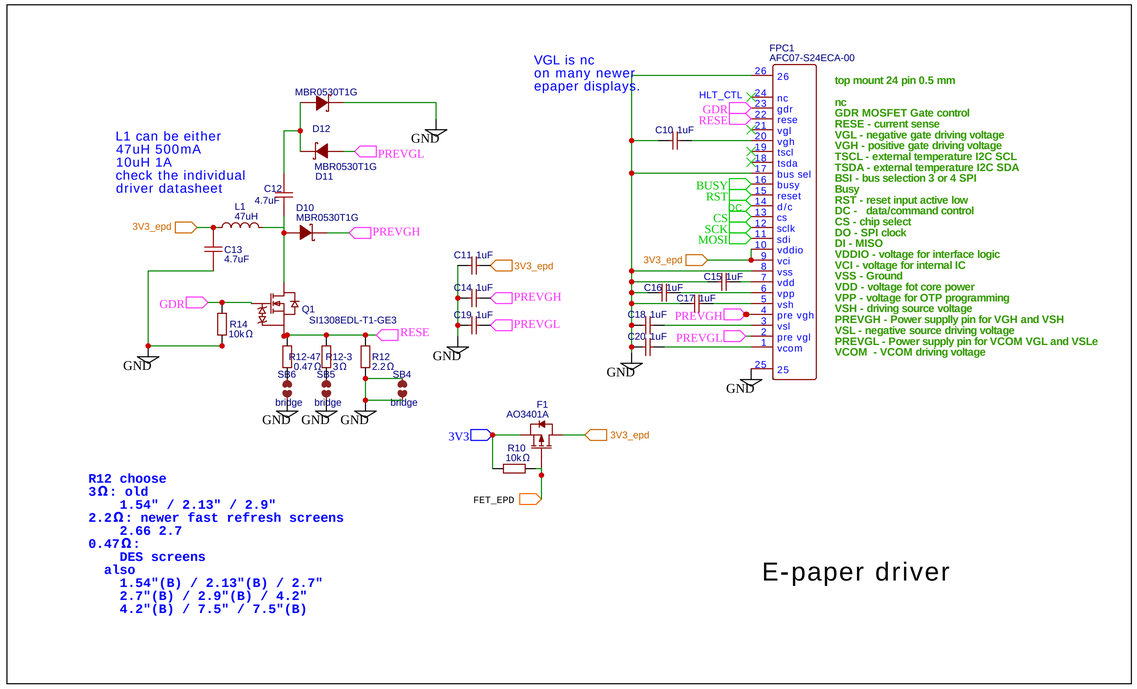

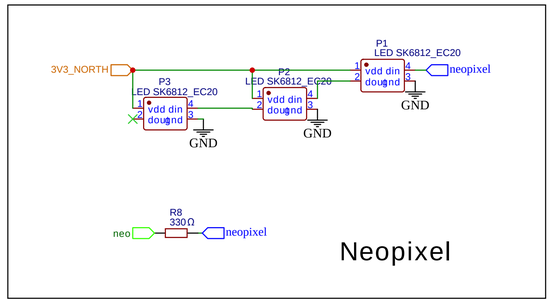

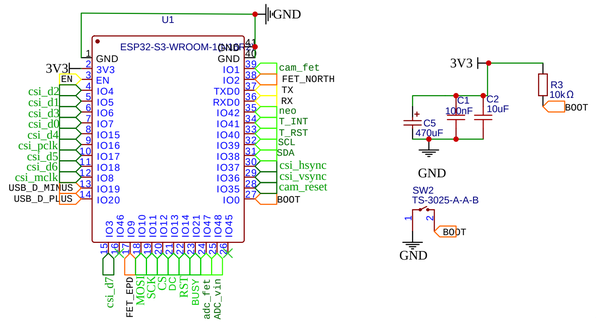

Strapping pins
The content below is excerpted from Section Strapping Pins in ESP32-S3 Series Datasheet.
ESP32-S3 has four strapping pins:

- GPIO0 Booting Mode
  (default pullup
  1 SPI boot
  0 Program load)
- GPIO45 VDD_SPI Voltage
  (default pulldown
  0 = 3.3V
  1 = 1.8V)
- GPIO46 Enabling/Disabling ROM Messages Print During Booting
  (default pulldown
  should be down for programming)
- GPIO3 JTAG Signal Selection
  (default floating
  low = JTAG signal from on-chip JTAG pins
  high = JTAG signal from USB Serial/JTAG controller)

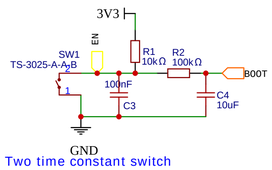

Two time constant switch

https://www.allaboutcircuits.com/technical-articles/linear-rc-delay-model-vlsi-design/

https://www.circuitbread.com/tools/rc-calculator

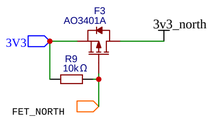

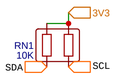

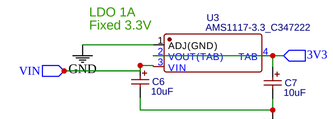

3v3 LDO

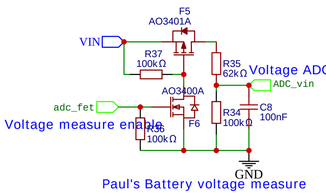

Paul's Battery voltage measure

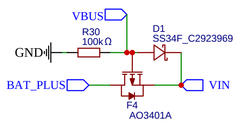

See Microchip AN1149

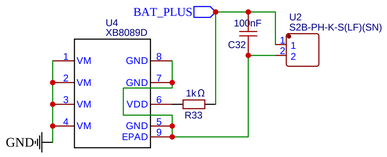

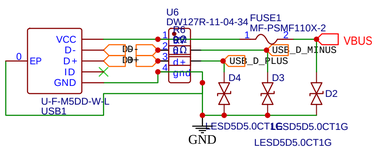

USB

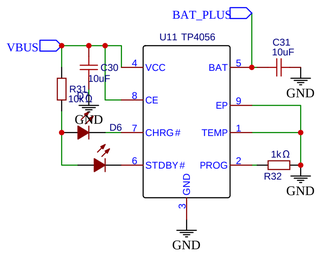

R32 select for battery

PROG(k)	IBAT(mA)
5K	250 mA
4	300
3	400
2	580
1.66	690
1.5	780
1.33	900
1.22	1000
1	1300

Battery charge

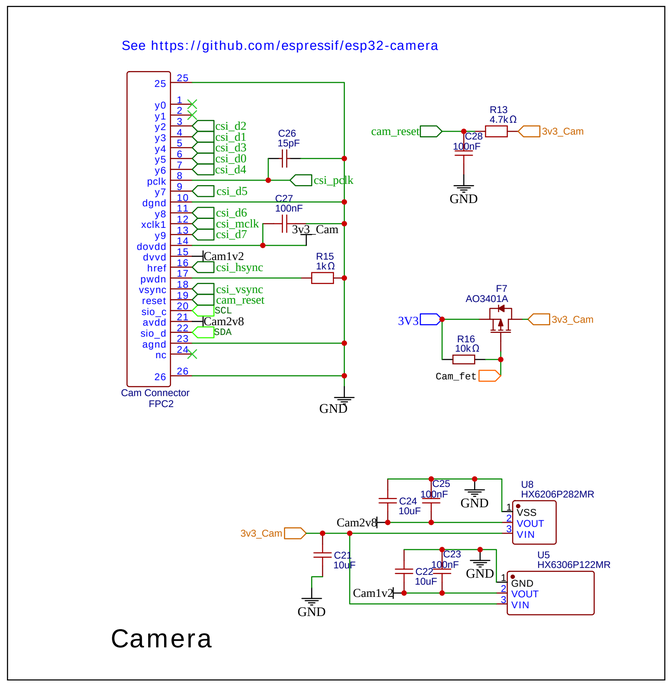

Camera

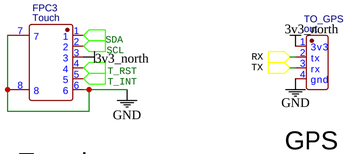

Touch

GPS

TITLE: Sheet_1			REV: 1.0
嘉立创EDA	Company: Your Company		Sheet: 1/1
	Date: 2022-09-14	Drawn By: greg_dickson	