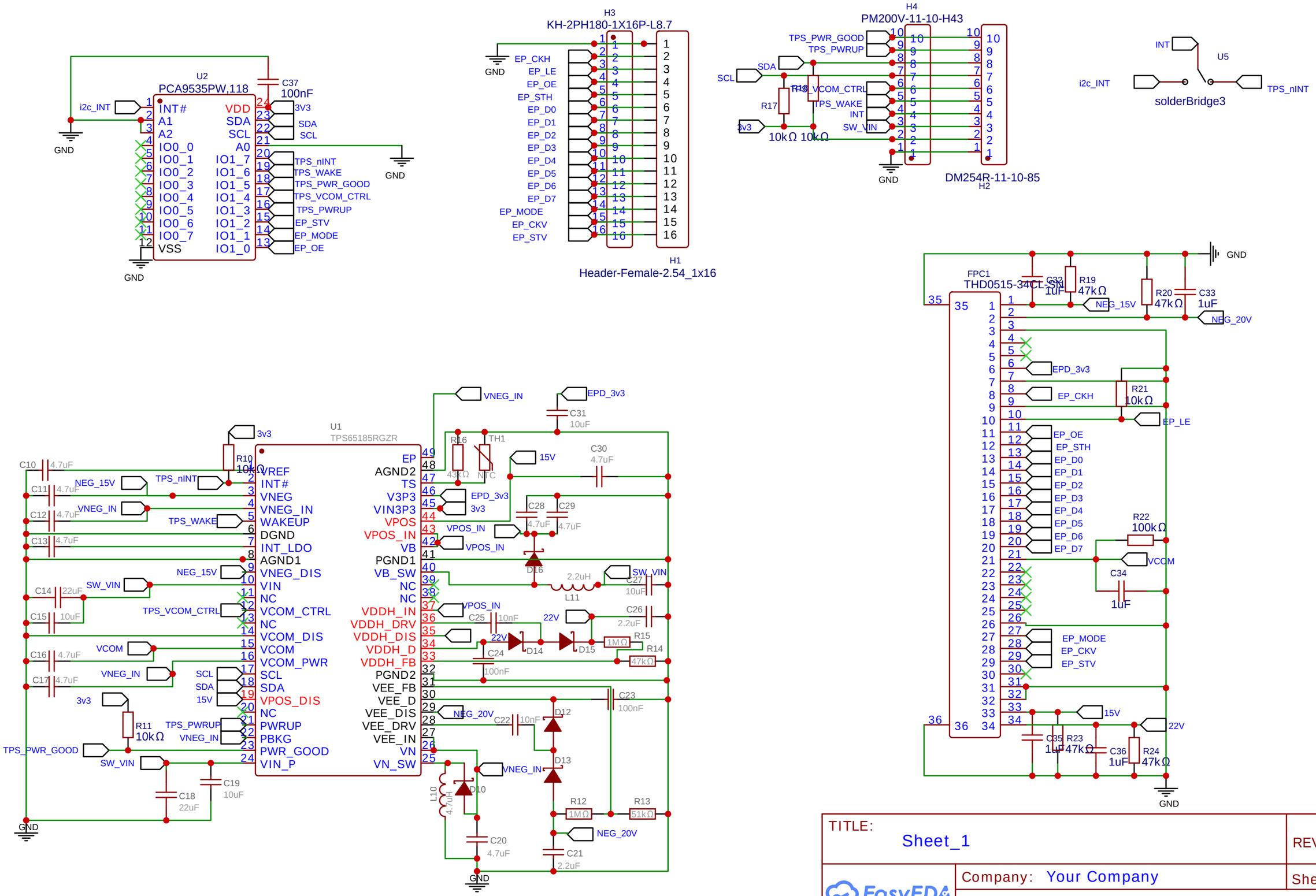


| | |
|---|---|
| TITLE: Sheet_1 | REV: 1.0 |
| Company: Your Company | Sheet: 1/1 |
| Date: 2022-06-03 Drawn By: greg_dickson | |

EasyEDA