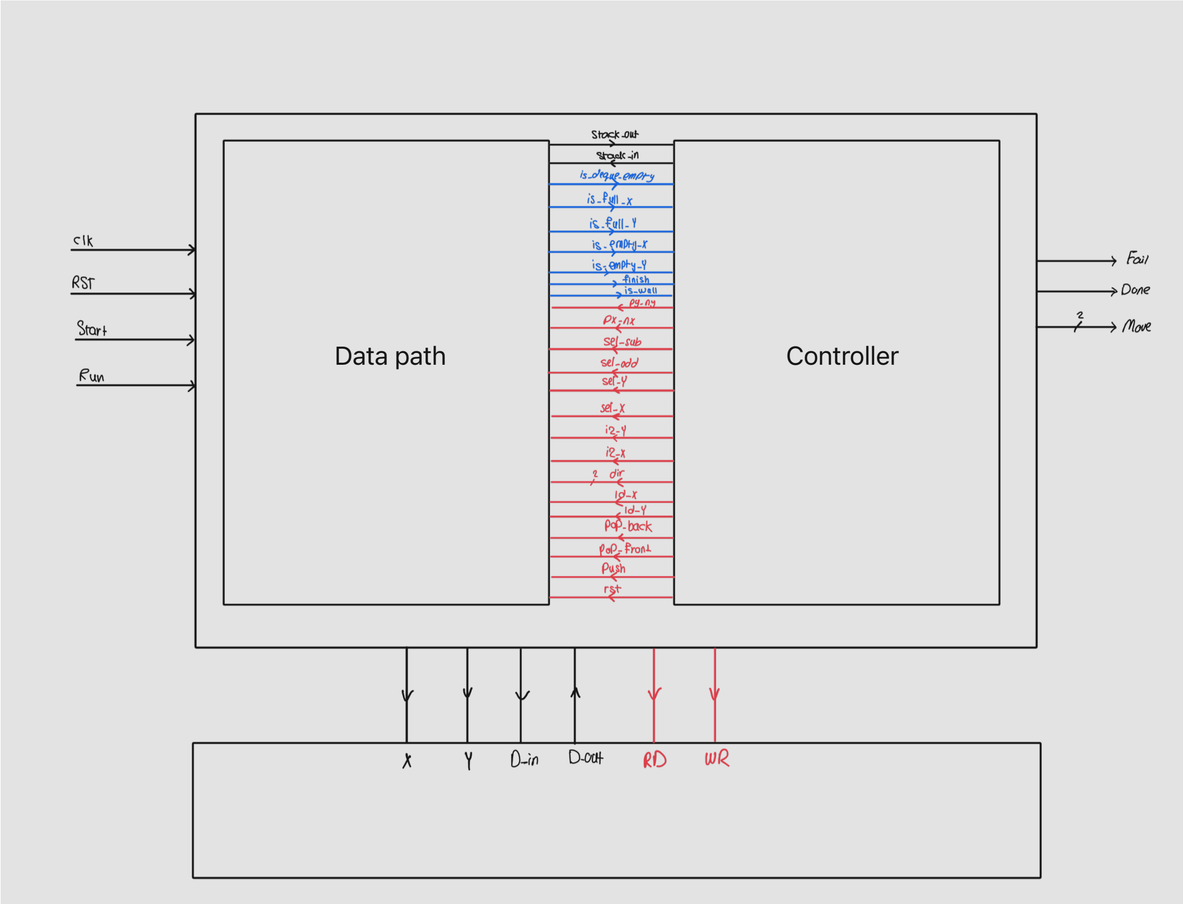

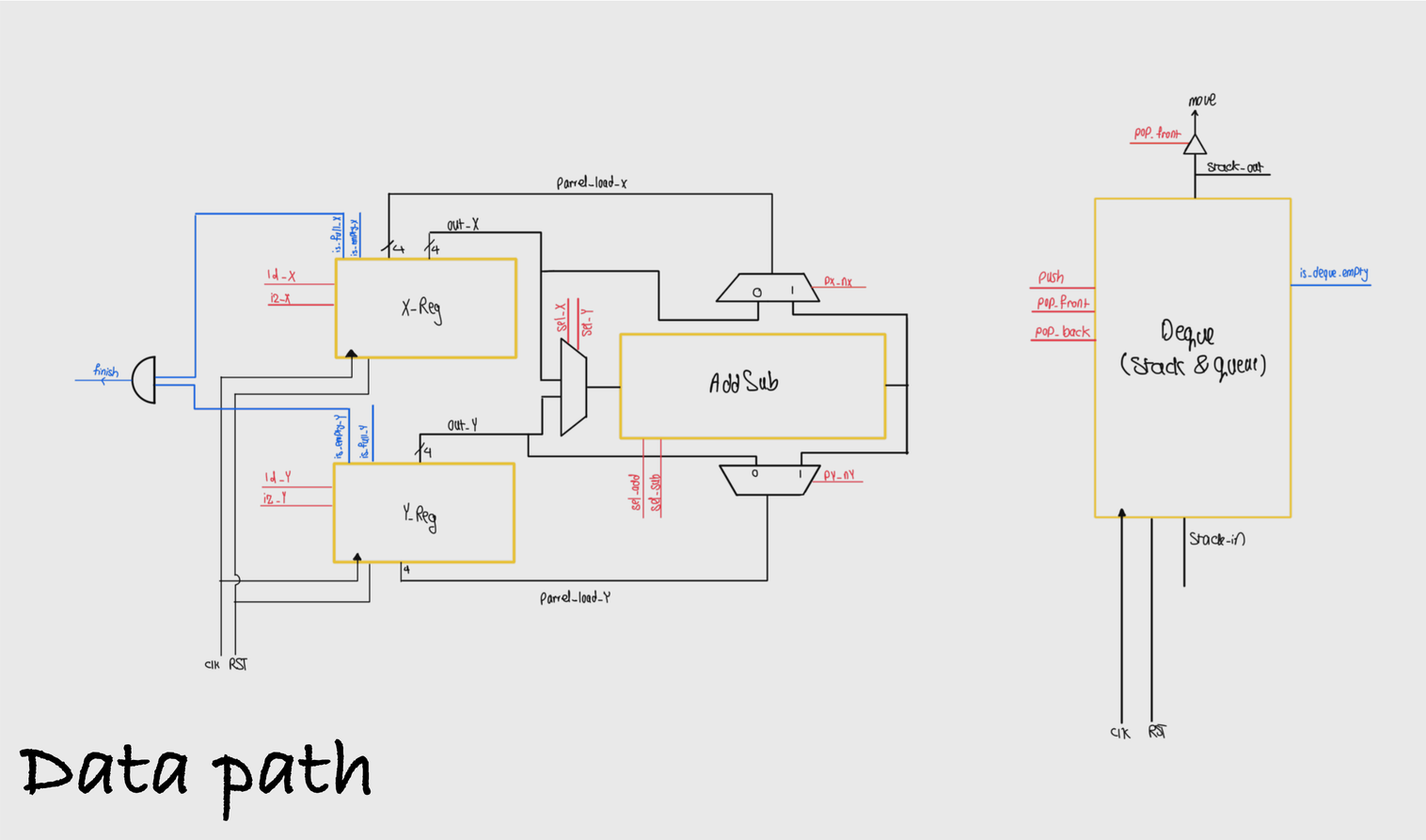

Data path

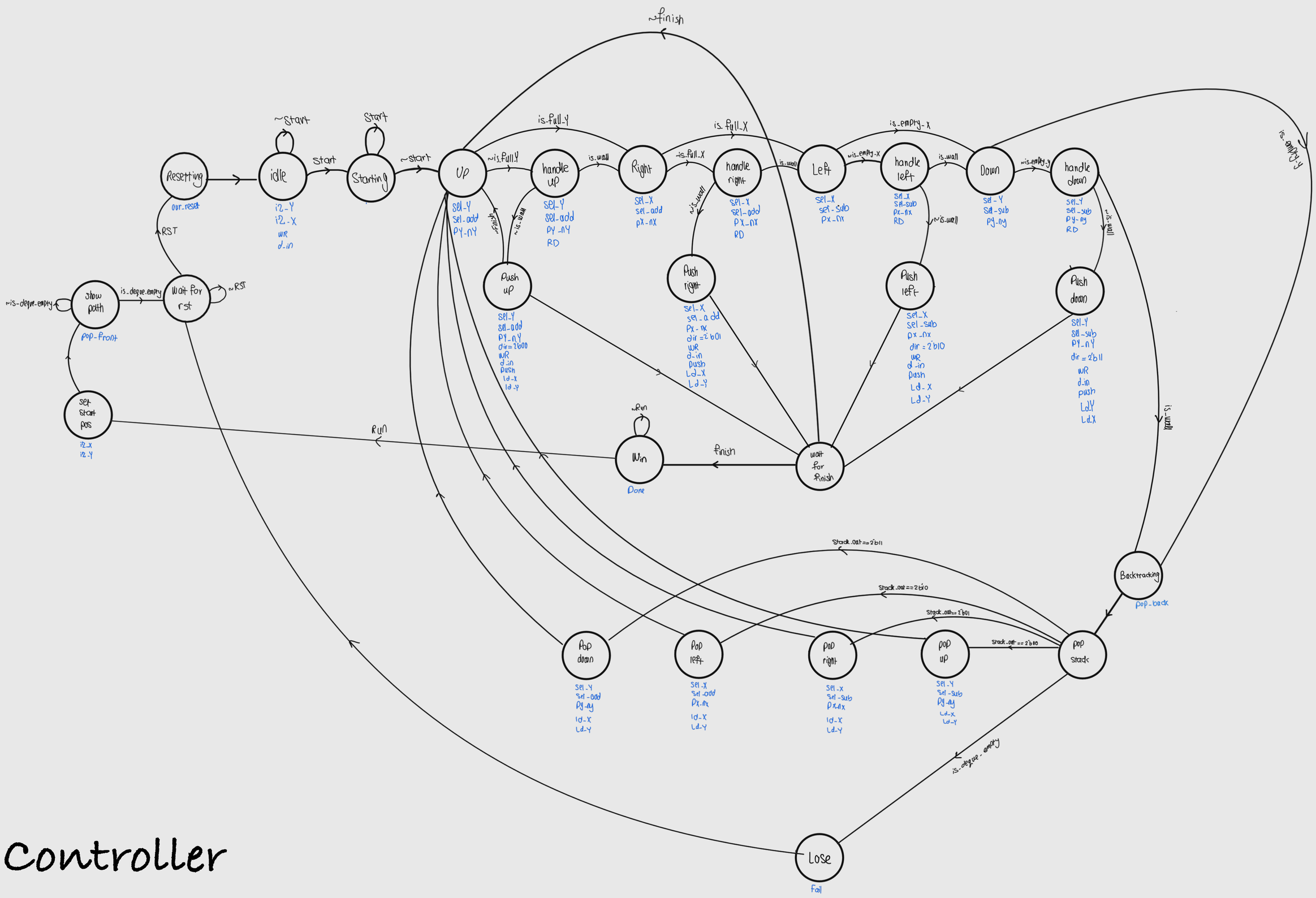

Controller