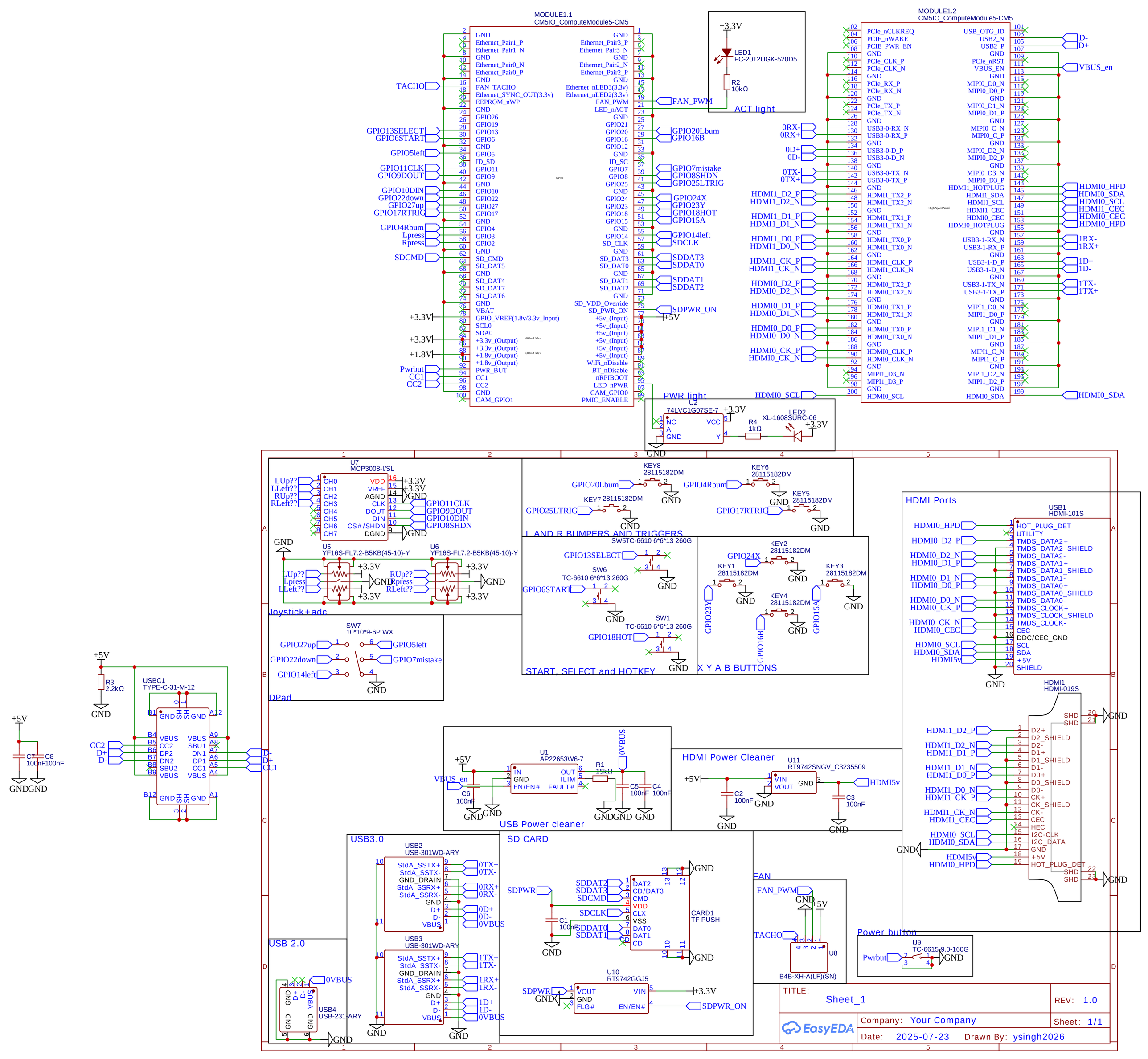
MODULE1.1
CM5IO_ComputeModule5-CM5
MODULE1.2
CM5IO_ComputeModule5-CM5
ACT light
LED1
FC-2012UGK-520D5
R2
10kΩ
PWR light
U2
74LVC1G07SE-7
LED2
XL-1608SURC-06
R4
1kΩ
U7
MCP3008-I/SL
U5
YF16S-FL7.2-B5KB(45-10)-Y
U6
YF16S-FL7.2-B5KB(45-10)-Y
joystick+adc
SW7
10*10*9-6P WX
DPad
KEY8
28115182DM
KEY7 28115182DM
KEY6
28115182DM
KEY5
28115182DM
L AND R BUMPERS AND TRIGGERS
SW5TC-6610 6*6*13 260G
SW6
TC-6610 6*6*13 260G
SW1
TC-6610 6*6*13 260G
START, SELECT and HOTKEY
KEY2
28115182DM
KEY1
28115182DM
KEY3
28115182DM
KEY4
28115182DM
X Y A B BUTTONS
HDMI Ports
USB1
HDMI-101S
HDMI1
HDMI-019S
USBC1
TYPE-C-31-M-12
R3
2.2kΩ
C7
100nF
C8
100nF
U1
AP22653W6-7
R1
15kΩ
C6
100nF
C5
100nF
C4
100nF
USB Power cleaner
HDMI Power Cleaner
U11
RT9742SNGV_C3235509
C2
100nF
C3
100nF
USB3.0
USB2
USB-301WD-ARY
USB3
USB-301WD-ARY
USB 2.0
USB4
USB-231-ARY
SD CARD
CARD1
TF PUSH
C1
100nF
U10
RT9742GGJ5
FAN
U8
B4B-XH-A(LF)(SN)
Power button
U9
TC-6615-9.0-160G
TITLE:
Sheet_1
REV: 1.0
Company: Your Company
Sheet: 1/1
Date: 2025-07-23
Drawn By: ysingh2026
EasyEDA