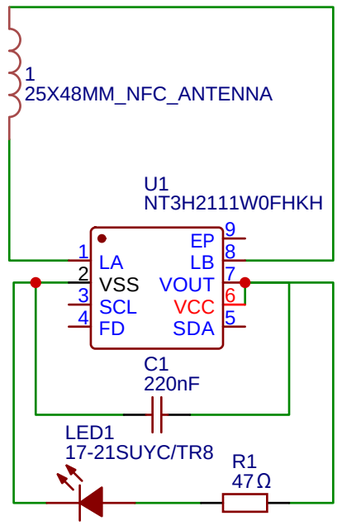

TITLE: hello there		REV: 1.0
EasyEDA	Company: non exsistent compant	Sheet: 1/1
	Date: 2025-01-08 Drawn By: jumpsushi1	