4:1 Mux

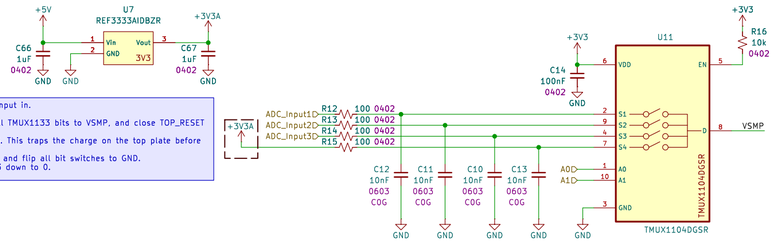

3V3 will be fed into the ADC after we loaded the input in.
Sequence:
1. Sample – Set TMUX1104 to the sensor input, all TMUX1133 bits to VSMP, and close TOP_RESET switch (top plate will have 1.65V ref on it now).
2. Trap – OPEN the TOP_RESET switch via SR2-QG. This traps the charge on the top plate before any voltages change.
3. Swap – Switch TMUX1104 to the 3.3V reference and flip all bit switches to GND.
4. Search – Execute the binary search from Bit 13 down to 0.

Serial to Parallel

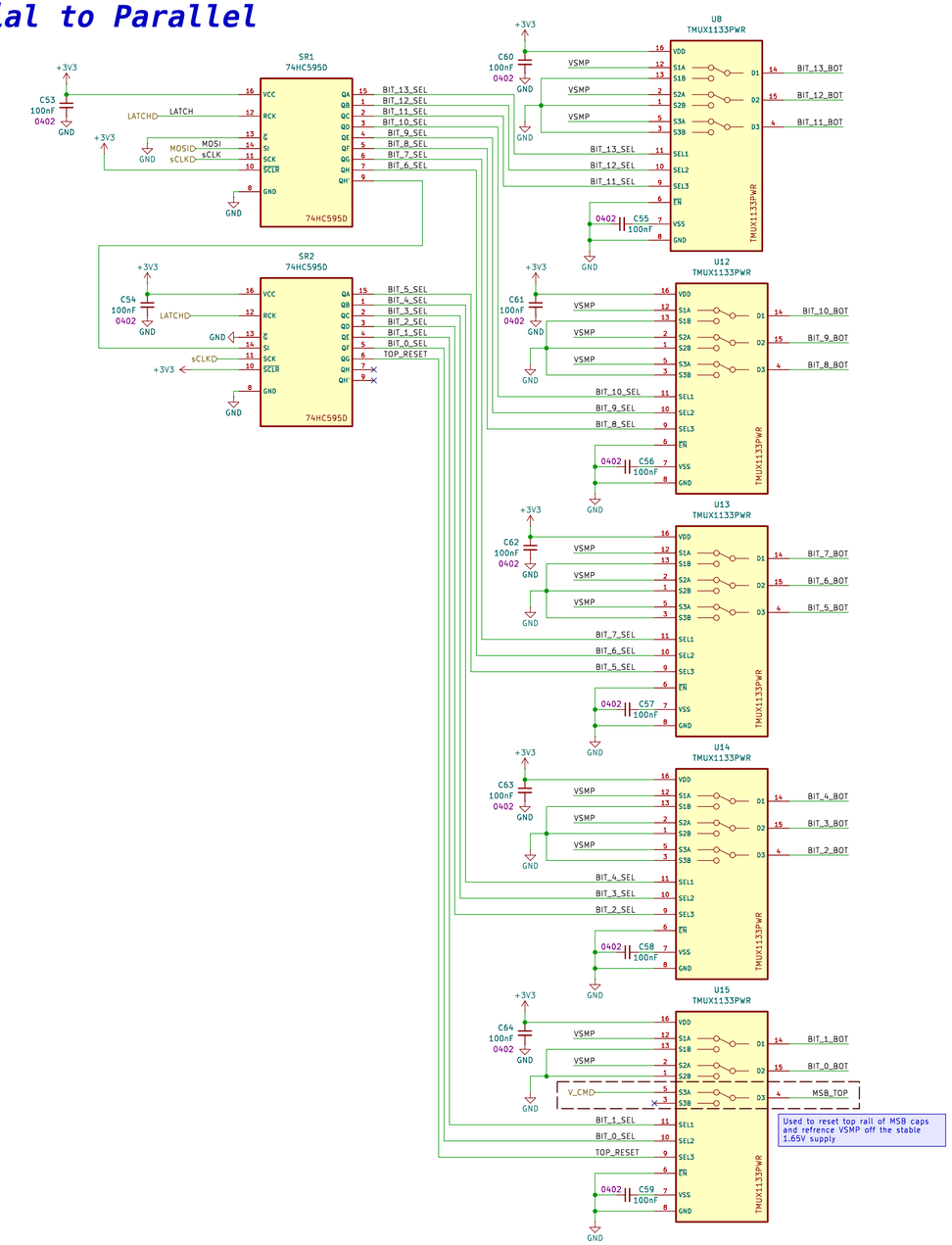

DAC Capacitors

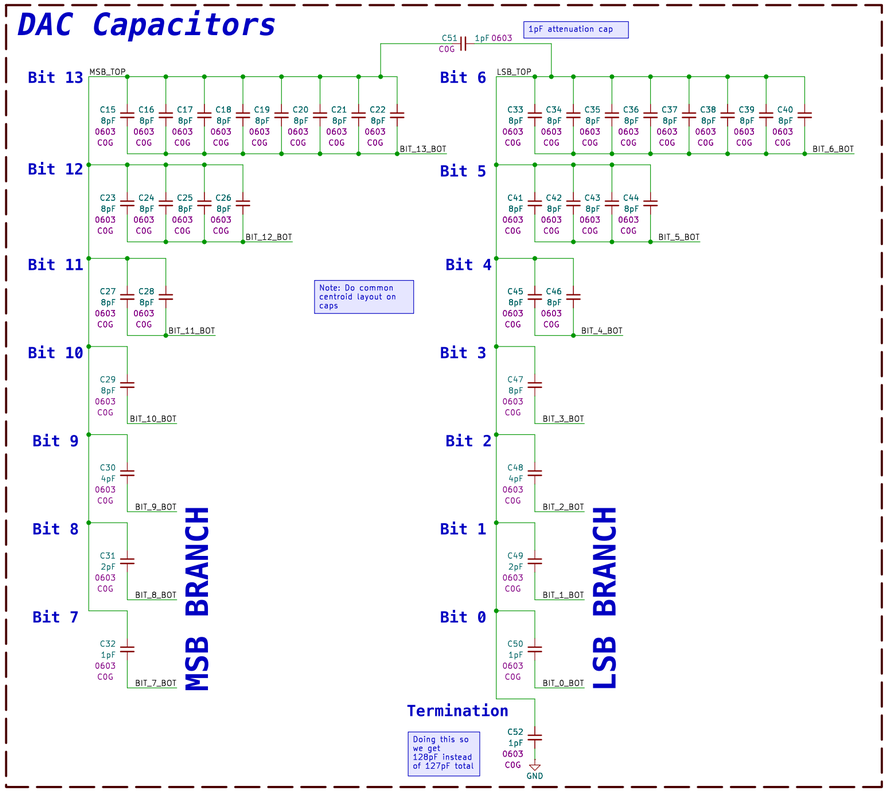

Output Comp

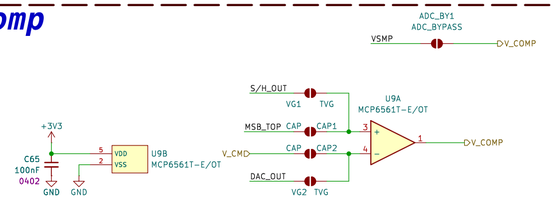

Voltage Search DAC

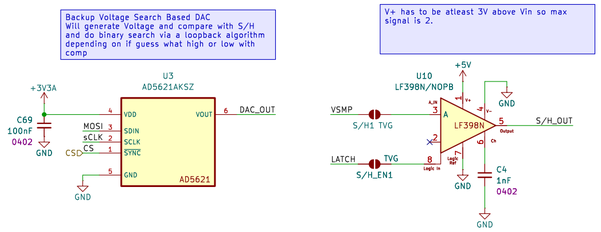

Sheet: /ADC/		
File: ADC.kicad_sch		
Title:		
Size: A2	Date:	**Rev:**
KiCad E.D.A. 9.0.7		Id: 3/4