Contents

1 Active Disturbance Rejection Controller **1**
1.1 Active Disturbance Rejection Control (ADRC) 1
1.1.1 Motivation and Control Objective 1
1.1.2 General Second-Order System Representation 1
1.1.3 Extended State Formulation 2
1.1.4 Extended State Observer (ESO) 2
1.1.5 Disturbance Compensation 3
1.1.6 Controller Design 4
1.2 ADRC Design for 2-DOF Helicopter 4
1.2.1 Pitch Dynamics 4
1.2.2 Yaw Dynamics 6
1.3 Simulink Modeling of ADRC on 2-DOF Helicopter Model 7
1.4 Simulation Results of ADRC on 2-DOF Helicopter 11

Chapter 1

Active Disturbance Rejection Controller

1.1 Active Disturbance Rejection Control (ADRC)

1.1.1 Motivation and Control Objective

Real-world dynamical systems such as aerial vehicles are affected by modeling uncertainties, nonlinear couplings, parameter variations, and external disturbances. Obtaining an exact mathematical model that captures all these effects is often impractical. Traditional model-based controllers rely heavily on accurate system modeling, which limits their robustness.

Active Disturbance Rejection Control (ADRC) addresses this issue by estimating and compensating disturbances online, rather than modeling them explicitly. The core idea of ADRC is to treat all unknown dynamics and disturbances as a single aggregated disturbance and actively reject it in real time.

The objective of ADRC is to transform the original uncertain system into a simple and well-understood form, allowing simple controllers to achieve robust performance.

1.1.2 General Second-Order System Representation

Consider a general second-order nonlinear system of the form

$$\ddot{y} = f(y, \dot{y}, t) + bu \tag{1.1}$$

where:

- y is the system output,
- u is the control input,
- b is the nominal control gain,
- $f(\cdot)$ represents unknown system dynamics and external disturbances.

The term $f(\cdot)$ includes nonlinearities, unmodeled dynamics, coupling effects, and disturbances.

1.1.3 Extended State Formulation

To estimate the unknown dynamics, ADRC introduces an extended state. Define the system states as

$$x_1 = y \tag{1.2}$$
$$x_2 = \dot{y} \tag{1.3}$$
$$x_3 = f \tag{1.4}$$

The extended system can then be written as

$$\dot{x}_1 = x_2 \tag{1.5}$$
$$\dot{x}_2 = x_3 + bu \tag{1.6}$$
$$\dot{x}_3 = \dot{f} \tag{1.7}$$

Here, x_3 represents the total disturbance acting on the system.

1.1.4 Extended State Observer (ESO)

Since only the output y is measurable, an observer is required to estimate the system states and the disturbance.

Define the observer error as

$$e = y - \hat{x}_1 \tag{1.8}$$

The Linear Extended State Observer (LESO) is given by

$$\dot{\hat{x}}_1 = \hat{x}_2 + \beta_1 e \tag{1.9}$$
$$\dot{\hat{x}}_2 = \hat{x}_3 + bu + \beta_2 e \tag{1.10}$$
$$\dot{\hat{x}}_3 = \beta_3 e \tag{1.11}$$

where β_1, β_2, and β_3 are observer gains that determine the speed of estimation.

Role of Observer Gains

Each observer gain has a specific role:

- β_1 corrects the estimation error in the output (position or angle).
- β_2 corrects the estimation error in the first derivative (velocity).
- β_3 corrects the estimation error in the total disturbance.

Higher observer gains result in faster estimation but increase sensitivity to measurement noise, while lower gains improve noise robustness at the cost of slower convergence.

Bandwidth-Based Gain Selection

In ADRC, the observer gains are selected using a bandwidth parameter ω_o, which represents the desired speed of the observer. The ESO characteristic polynomial is chosen as

$$(s + \omega_o)^3 = s^3 + 3\omega_o s^2 + 3\omega_o^2 s + \omega_o^3 \tag{1.12}$$

By matching coefficients, the observer gains are selected as

$$\beta_1 = 3\omega_o \tag{1.13}$$
$$\beta_2 = 3\omega_o^2 \tag{1.14}$$
$$\beta_3 = \omega_o^3 \tag{1.15}$$

This choice places all observer poles at $-\omega_o$, ensuring fast and uniform convergence of the estimated states and disturbance.

Practical Selection of Observer Bandwidth

The observer bandwidth ω_o is typically chosen to be several times larger than the controller bandwidth. A common guideline is

$$\omega_o = (3 \sim 10)\,\omega_c \tag{1.16}$$

where ω_c is the controller bandwidth.

A larger ω_o improves disturbance estimation speed but increases noise amplification. Therefore, ω_o is selected based on sensor quality and noise levels.

Physical Interpretation

From a physical perspective, the observer bandwidth determines how quickly the observer reacts to changes in the measured output. A fast observer treats deviations as disturbances almost instantly, enabling effective disturbance rejection. However, excessive bandwidth may amplify sensor noise and degrade control performance.

Hence, the observer gains represent a balance between estimation speed and robustness to noise.

The ESO simultaneously estimates the system states and the total disturbance.

1.1.5 Disturbance Compensation

Using the disturbance estimate $\hat{x}_3$, the control input is defined as

$$u = \frac{u_0 - \hat{x}_3}{b} \tag{1.17}$$

Substituting this into the system dynamics yields

$$\ddot{y} \approx u_0 \tag{1.18}$$

Thus, after disturbance compensation, the system behaves approximately as a double integrator.

1.1.6 Controller Design

Derivation of the Virtual Control Input u_0

To understand the origin of the virtual control input u_0, it is useful to begin with the simplified view of the system dynamics adopted in Active Disturbance Rejection Control (ADRC). Instead of relying on an accurate mathematical model, ADRC treats the plant as a chain of integrators with an unknown disturbance term that represents unmodeled dynamics and external disturbances.

After disturbance compensation using the Extended State Observer (ESO), the compensated system can be approximated as a double integrator of the form

$$\ddot{y} \approx u_0, \tag{1.19}$$

where y is the system output and u_0 is a virtual control input. This approximation indicates that the effect of unknown dynamics and disturbances has been actively estimated and removed, leaving a simple and well-understood system structure.

For a double integrator system, stabilization and tracking can be achieved using a Proportional–Derivative (PD) control law. The objective is to force the system output y to track a desired reference y_d. To this end, the tracking error is defined as $e = y_d - y$, and its derivative as $\dot{e} = \dot{y}_d - \dot{y}$. A standard PD control law for such a system is given by

$$u_0 = K_p e + K_d \dot{e}. \tag{1.20}$$

In ADRC, the true system states are not directly used. Instead, the ESO provides estimates of the output and its derivative, denoted by $\hat{x}_1 \approx y$ and $\hat{x}_2 \approx \dot{y}$. Substituting these estimates into the PD control law yields

$$u_0 = K_p(y_d - \hat{x}_1) - K_d \hat{x}_2, \tag{1.21}$$

which corresponds to the virtual control input given in Eq. (3.19). The derivative of the reference signal is neglected here for simplicity, as the reference is typically chosen to be slowly varying or constant.

Thus, the virtual control input u_0 is obtained by designing a PD controller for a disturbance-free double integrator system using estimated states provided by the ESO. This approach ensures a simple control structure while maintaining effective tracking performance.

The final ADRC control law becomes

$$u = \frac{K_p(y_d - \hat{x}_1) - K_d \hat{x}_2 - \hat{x}_3}{b} \tag{1.22}$$

This structure actively rejects disturbances while maintaining simple controller design.

1.2 ADRC Design for 2-DOF Helicopter

1.2.1 Pitch Dynamics

The pitch dynamics of the helicopter can be expressed as

$$(J_\theta + ml^2)\ddot{\theta} = \tau_p - ml^2 \cos\theta \sin\theta \dot{\psi}^2 - mgl\cos\theta - D_p\dot{\theta}, \tag{1.23}$$

where:

- θ is the pitch angle,
- ψ is the yaw angle,
- J_θ is the pitch moment of inertia,
- m is the mass,
- l is the distance to the center of mass,
- D_p is the pitch damping coefficient,
- τ_p is the pitch control torque.

The control torque is generated by the rotor inputs as

$$\tau_p = K_{pp} v_p + K_{py} v_y, \tag{1.24}$$

where v_p and v_y are the pitch and yaw motor voltages, respectively.

Dividing both sides by $(J_0 + ml^2)$, the pitch dynamics become

$$\ddot{\theta} = b_\theta u_p + f_\theta, \tag{1.25}$$

where the nominal control gain is defined as

$$b_\theta = \frac{1}{J_0 + ml^2}, \tag{1.26}$$

and the total disturbance is

$$f_\theta = -b_\theta \left(ml^2 \cos\theta \sin\theta \dot{\psi}^2 + mgl \cos\theta + D_p \dot{\theta} \right). \tag{1.27}$$

Thus, all nonlinear terms, coupling effects, gravity, and damping are grouped into a single disturbance term.

Pitch dynamics can now be written in the ADRC standard second-order form

$$\ddot{y} = bu + f, \tag{1.28}$$

where y represents θ.

Define the pitch extended states as

$$x_1 = \theta \tag{1.29}$$

$$x_2 = \dot{\theta} \tag{1.30}$$

$$x_3 = f_\theta \tag{1.31}$$

The pitch ESO is given by

$$\dot{\hat{x}}_1 = \hat{x}_2 + \beta_1 e \tag{1.32}$$

$$\dot{\hat{x}}_2 = \hat{x}_3 + b_\theta u_p + \beta_2 e \tag{1.33}$$

$$\dot{\hat{x}}_3 = \beta_3 e \tag{1.34}$$

where $e = \theta - \hat{x}_1$.

The pitch control law is

$$u_p = \frac{K_p(\theta_d - \hat{x}_1) - K_d \hat{x}_2 - \hat{x}_3}{b_\theta} \tag{1.35}$$

1.2.2 Yaw Dynamics

The yaw dynamics of the helicopter are given by

$$J_y\ddot{\psi} = \tau_y - 2ml^2\cos\theta\sin\theta\dot{\theta}\dot{\psi} - D_y\dot{\psi}, \tag{1.36}$$

where:

- J_y is the yaw moment of inertia,
- D_y is the yaw damping coefficient,
- τ_y is the yaw control torque.

The yaw control torque is expressed as

$$\tau_y = K_{yp}v_p + K_{yy}v_y. \tag{1.37}$$

Dividing by J_y, the yaw dynamics can be rewritten as

$$\ddot{\psi} = b_\psi u_\psi + f_\psi, \tag{1.38}$$

with nominal control gain

$$b_\psi = \frac{1}{J_y}, \tag{1.39}$$

and total disturbance

$$f_\psi = -b_\psi\left(2ml^2\cos\theta\sin\theta\dot{\theta}\dot{\psi} + D_y\dot{\psi}\right). \tag{1.40}$$

Yaw dynamics can now be written in the ADRC standard second-order form

$$\ddot{y} = bu + f, \tag{1.41}$$

where y represents ψ.

Define the yaw extended states as

$$x_1 = \psi \tag{1.42}$$
$$x_2 = \dot{\psi} \tag{1.43}$$
$$x_3 = f_\psi \tag{1.44}$$

The yaw ESO is

$$\dot{\hat{x}}_1 = \hat{x}_2 + \beta_1 e \tag{1.45}$$
$$\dot{\hat{x}}_2 = \hat{x}_3 + b_\psi u_\psi + \beta_2 e \tag{1.46}$$
$$\dot{\hat{x}}_3 = \beta_3 e \tag{1.47}$$

with observer error

$$e = \psi - \hat{x}_1 \tag{1.48}$$

The yaw ADRC control law is

$$u_\psi = \frac{K_p(\psi_d - \hat{x}_1) - K_d\hat{x}_2 - \hat{x}_3}{b_\psi} \tag{1.49}$$

1.3 Simulink Modeling of ADRC on 2-DOF Helicopter Model

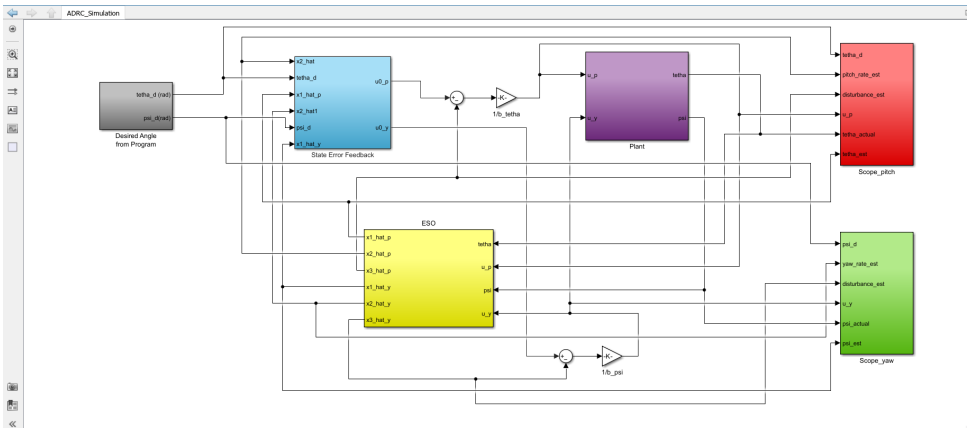

Figure 1.1: Block diagram of the entire system

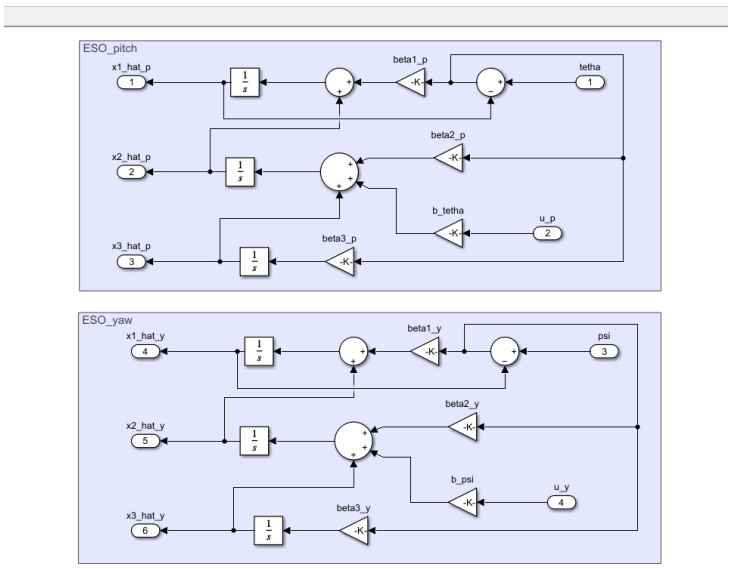

Figure 1.2: Block diagram of the Extended State Observer(ESO) for both Yaw and Pitch

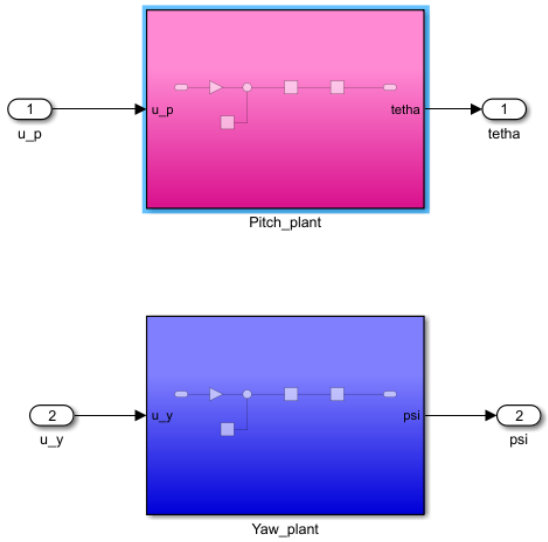

Figure 1.3: Pitch and Yaw subplant inside plant

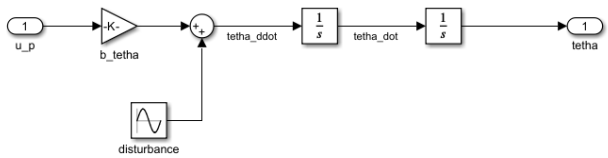

Figure 1.4: Block Diagram of pitch subplant

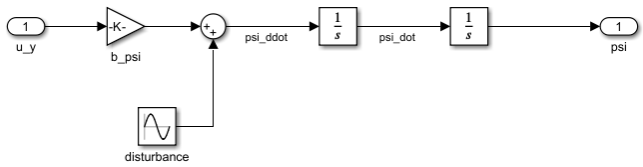

Figure 1.5: Block Diagram of yaw subplant

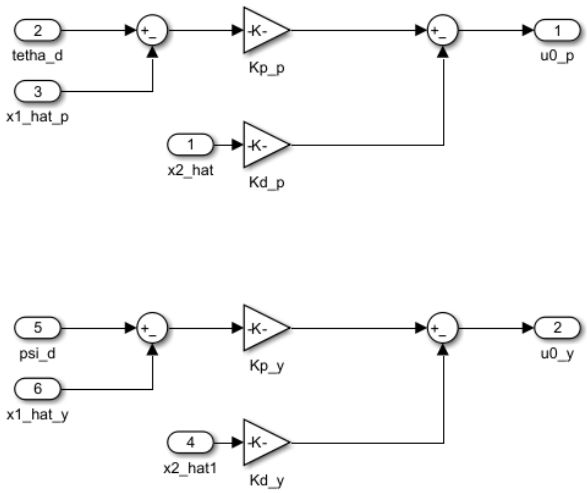

Figure 1.6: Block Diagram of State Error Feedback

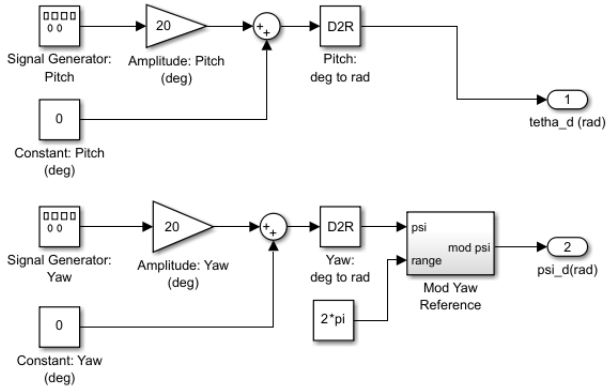

Figure 1.7: Block Diagram of Desired signal for both Yaw and Psi

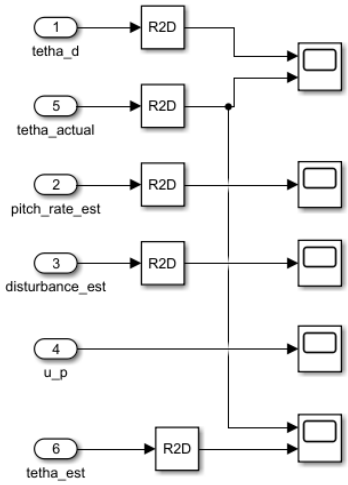

Figure 1.8: Block Diagram of Scope for Pitch

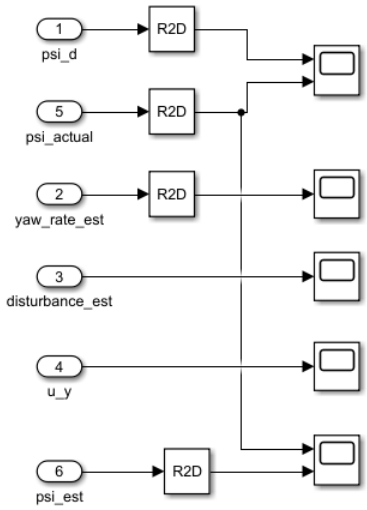

Figure 1.9: Block Diagram of Scope for Yaw

1.4 Simulation Results of ADRC on 2-DOF Helicopter

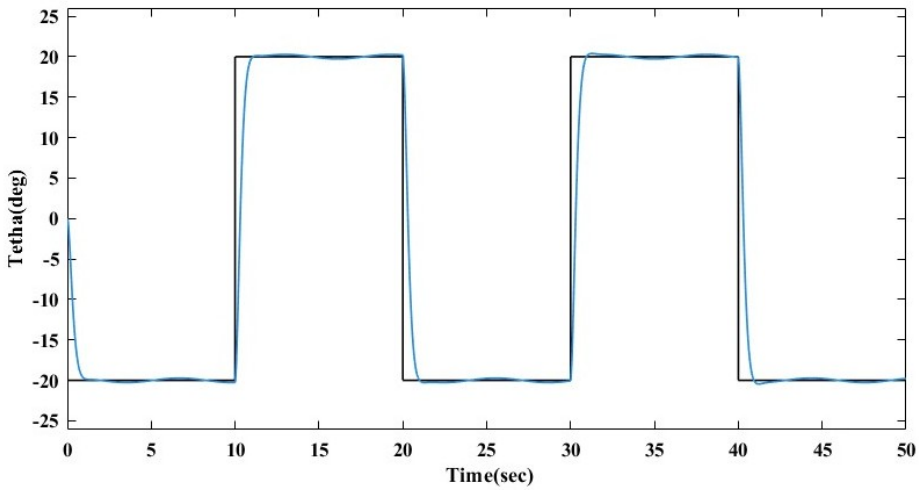

Figure 1.10: Simulation result for Pitch

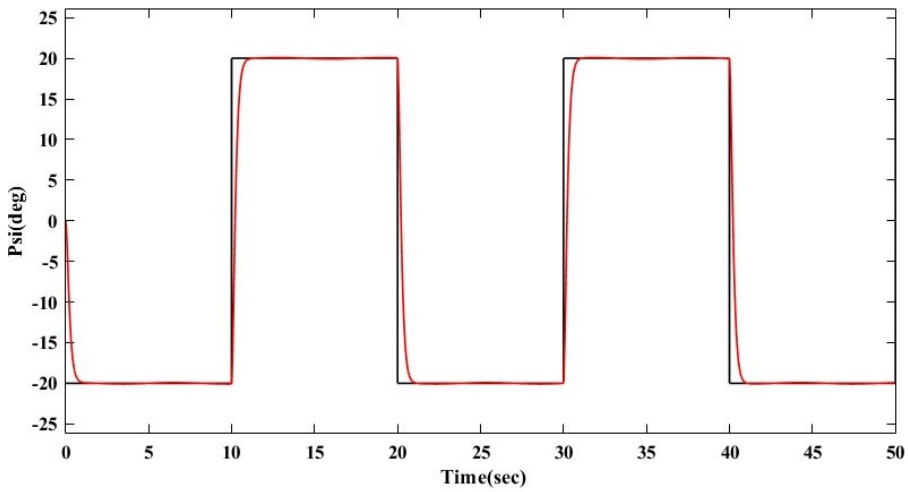

Figure 1.11: Simulation result for Yaw