Faculty of Engineering & Technology

Electrical & Computer Engineering Department

Analog Electronics-ENEE2360

Project Report

Prepared by:

Areej Younis – 1221419

Yasmin Al shawawrh – 1220848

Raghad Jamhour – 1220212

Instructor: Dr. Mohammad Al Ju'Beh

Section: 1

Date: 21.May.2024

I. Abstract

In this project, we built an automatic night light circuit that activates an LED in response to ambient darkness. The circuit utilizes the µA741 operational amplifier configured as a comparator. When the circuit detects low light levels, the LED automatically turns on and remains lit as long as the darkness persists.

The components required for this circuit include six resistors of varying values, one NPN BJT transistor, an inverting Schmitt trigger comparator, an LED, an LDR sensor, three diodes, and a 100KΩ potentiometer.

Table of Contents

Abstract

Table of figures

Theory……..

Components……1

I. µA741 Op Amp……1

II. NPN BJT transistor……1

III. 1N4148 Diode……2

IV. LDR sensor……2

V. LED……3

VI. Resistor……3

VII. Potentiometer……3

Circuit Operation……4

Procedure……

Practical……5

Simulation……6

Part b……6

Part c……7

Part d……10

Part e……11

Part f……12

Part g……12

Conclusion……13

References ……14

Table of figures

Figure 1

Figure 1-a: µA741 op Amp.

Figure 1-b: µA741 IC Pinout.

Figure 2: 2N2222 transistor symbol.

Figure 3: IN4148 Diode Pinout.

Figure 4: LDR sensor symbol.

Figure 5: LED symbol.

Figure 6: Resistor symbol.

Figure 7: potentiometer symbol.

Figure 8: The circuit on breadboard.

Figure 9: The circuit for LDR = 10K

Figure 10: Simulation result for LDR = 10K

Figure 11: The circuit for LDR = 100K

Figure 12: Simulation result for LDR = 100K

Figure 13: The circuit for LDR = 400K

Figure 14: Simulation result for LDR = 400K

Figure 15: The circuit for LDR = 600K Figure 16:

Simulation result for LDR = 600K

Figure 17: Circuit with V_{PWL} Voltage source.

Figure 18: V_{PWL} Voltage source.

Figure 19: Plotting V_C (t) .

Figure 20: Plotting V_E (t) .

Figure 20: Plotting V_C (t) with V_{PWL} Voltage source.

Figure 21: By hand calculation.

II. Theory

II.I Components

I. µA741 Op-Amp

The µA741 is a versatile general-purpose operational amplifier with offset-voltage null capability. It features a high common-mode input voltage range and is immune to latchup, making it ideal for voltage-follower applications. The device includes short-circuit protection, and its internal frequency compensation ensures stability without the need for external components. As a high-performance monolithic operational amplifier built on a single silicon chip, the µA741 is suitable for a wide range of analog applications. [1]

Figure 1-a: µA741 op Amp.

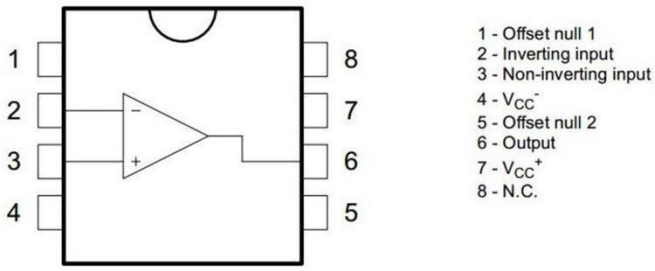

Figure 1-b: µA741 IC Pinout.

II. NPN BJT transistor

The 2N2222 is a common NPN bipolar junction transistor (BJT) used for general purpose lowpower amplifying or switching applications. It is designed for low to medium current, low power, medium voltage, and can operate at moderately high speeds. [2]

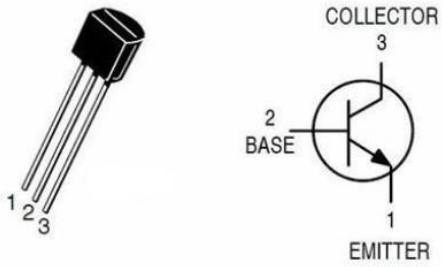

Figure 2: 2N2222 transistor symbol.

III. 1N4148 Diode

The 1N4148 is a standard silicon switching signal diode, for IN4148 Diode, the maximum current carrying capacity is 300mA, it can withstand peaks up to 2A. The specialty of this diode is its fast recovery time of 8ns at a forward current of 10mA, hence this diode is used in places where fast switching are involved. [3]

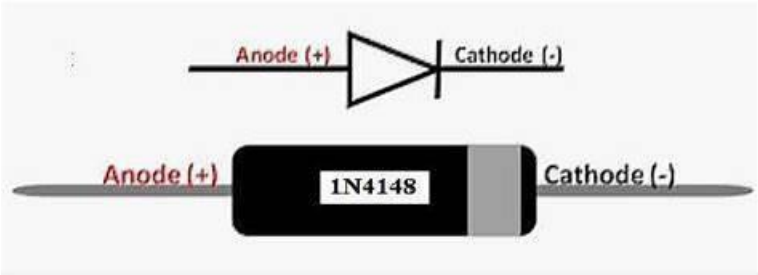

Figure 3: IN4148 Diode Pinout.

IV. LDR sensor

An LDR or light dependent resistor is also known as photo resistor, photocell, photoconductor. It is a one type of resistor whose resistance varies depending on the amount of light falling on its surface. When the light falls on the resistor, then the resistance changes. These resistors are often used in many circuits where it is required to sense the presence of light. These resistors have a variety of functions and resistance. [4]

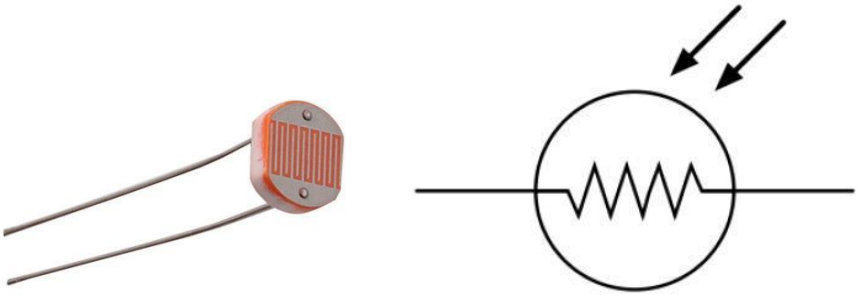

Figure 4: LDR sensor symbol.

V. LED

A light-emitting diode (LED) is a widely used standard light source in electrical equipment. It is a semiconductor device that emits light when an electric current flows through it.

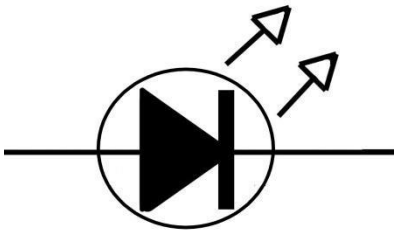

Figure 5: LED symbol.

VI. Resistor

A resistor is a passive two-terminal electrical component that implements electrical resistance as a circuit element. In electronic circuits, resistors are used to reduce current flow, adjust signal levels, to divide voltages, bias active elements, and terminate transmission lines, among other uses. [5]

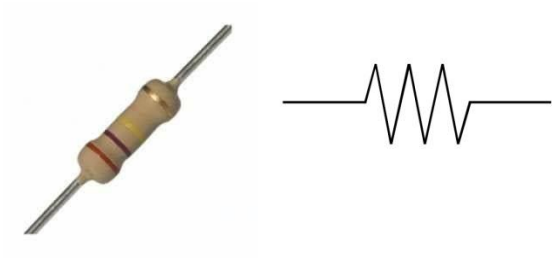

Figure 6: Resistor symbol.

VII. Potentiometer

A potentiometer (also known as a pot or potmeter) is defined as a 3 terminal variable resistor in which the resistance is manually varied to control the flow of electric current. A potentiometer acts as an adjustable voltage divider. [6]

Figure 7: potentiometer symbol.

II.II Circuit Operation

I. Light Detection

The LDR and a fixed resistor form a voltage divider. The voltage at the midpoint of this divider changes with light levels. In bright light, the LDR's resistance is low, and in darkness, its resistance is high.

II. Reference Voltage

A reference voltage is set using potentiometer and is fed to the non-inverting input of the opamp. The potentiometer allows for adjusting the reference voltage to set the threshold level of darkness at which the light should turn on.

III. Comparator Action

The op-amp compares the voltage from the LDR voltage divider with the reference voltage. When it gets dark, the LDR’s resistance increases, causing the voltage at the inverting input to rise. When this voltage exceeds the reference voltage, the output of the op-amp changes state (from low to high or vice versa), activating a transistor that allows current to flow through the light, turning it on.

IV. Transistor Switching

The output of the op-amp drives a transistor, which acts as a switch; when the op-amp output changes state (indicating it's dark), the transistor is triggered, allowing current to flow through the LED, thus turning it on. When it is bright, the op-amp output changes back, turning off the transistor and hence the light.

III. Procedure

I. practical

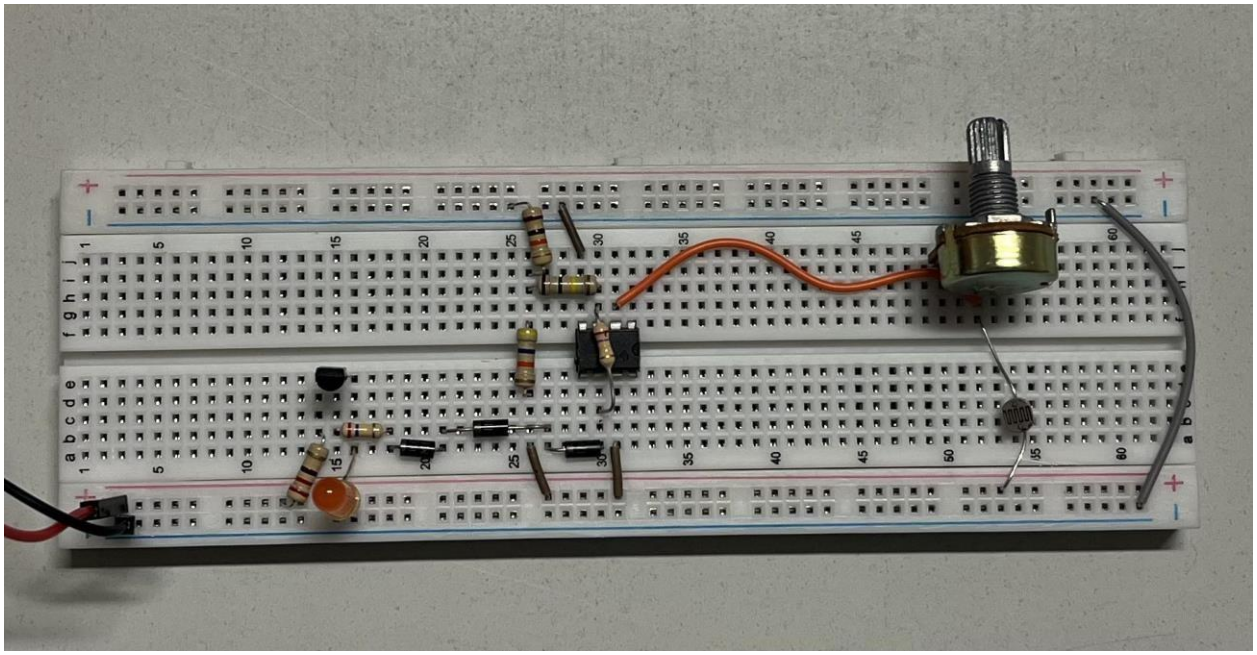

Figure 8: The circuit on breadboard.

The automatic night light circuit uses a uA741 op-amp to sense ambient light through an LDR. The op-amp compares the voltage from the LDR voltage divider with a reference voltage. In darkness, the LDR's resistance increases, causing a rise in the voltage at the inverting input of the op-amp. When this voltage exceeds the reference voltage at the non-inverting input, the opamp output changes state, turning on a transistor that allows current to flow through the D1N4148 diode, thereby illuminating it. In bright conditions, the op-amp output reverts, turning off the transistor and the diode.

II. Simulation

I. Part b: Simulate the circuit for LDR = 10K.

*After replacing the LED with D1N4148

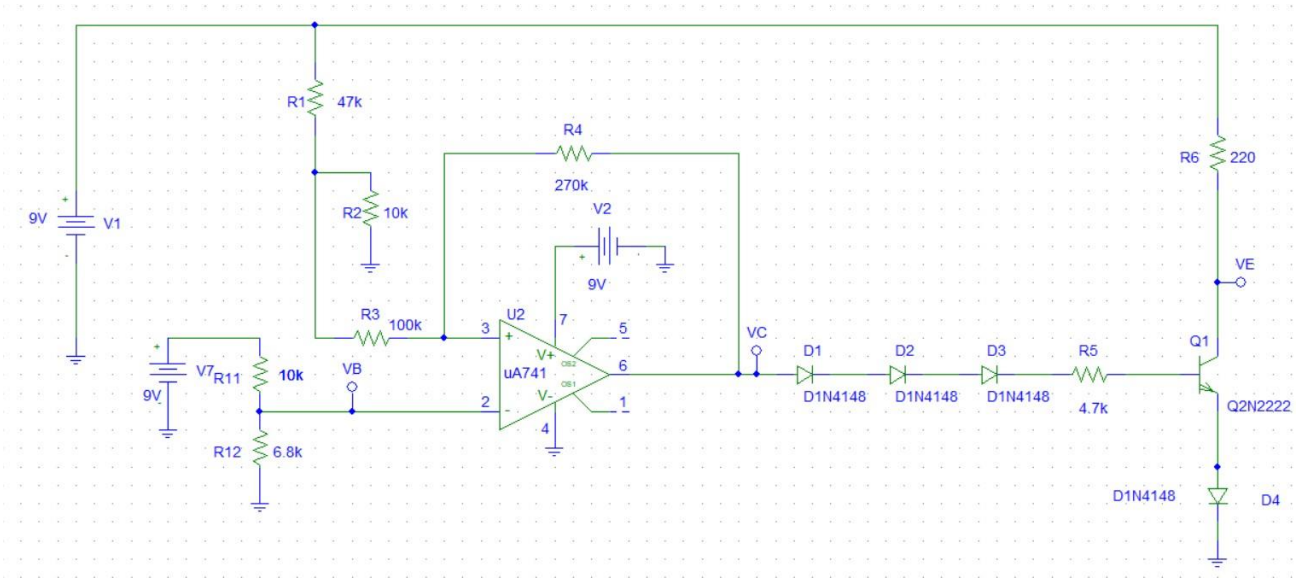

Figure 9: The circuit for LDR = 10K

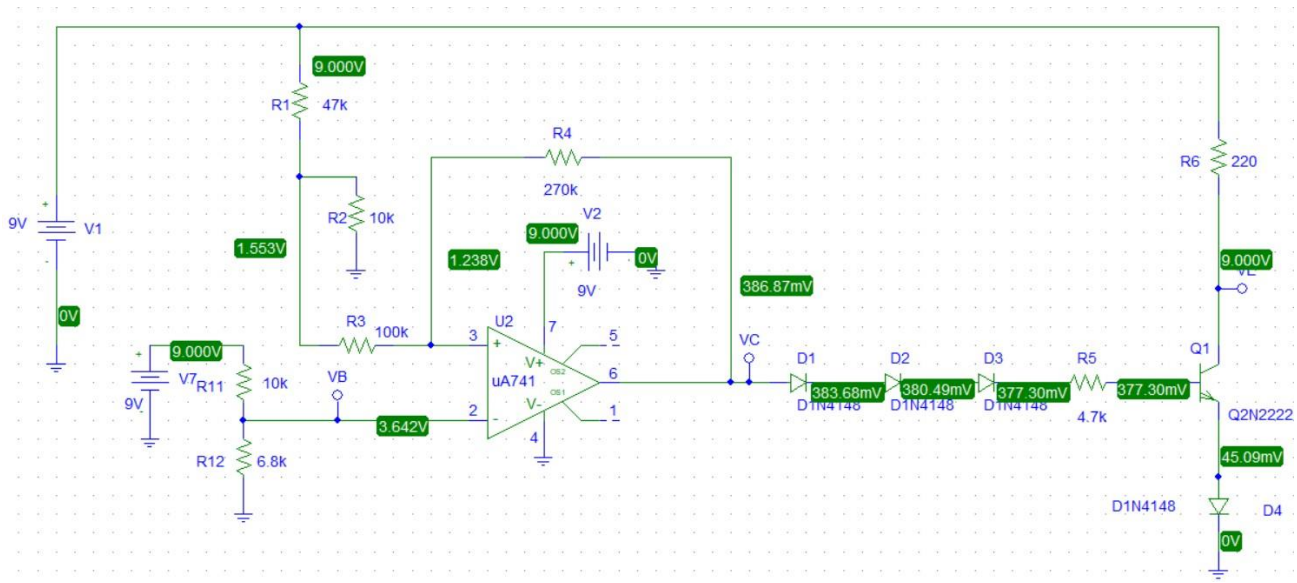

Figure 10: Simulation result for LDR = 10K

II. Part c:

I. Simulate the circuit for LDR = 100K.

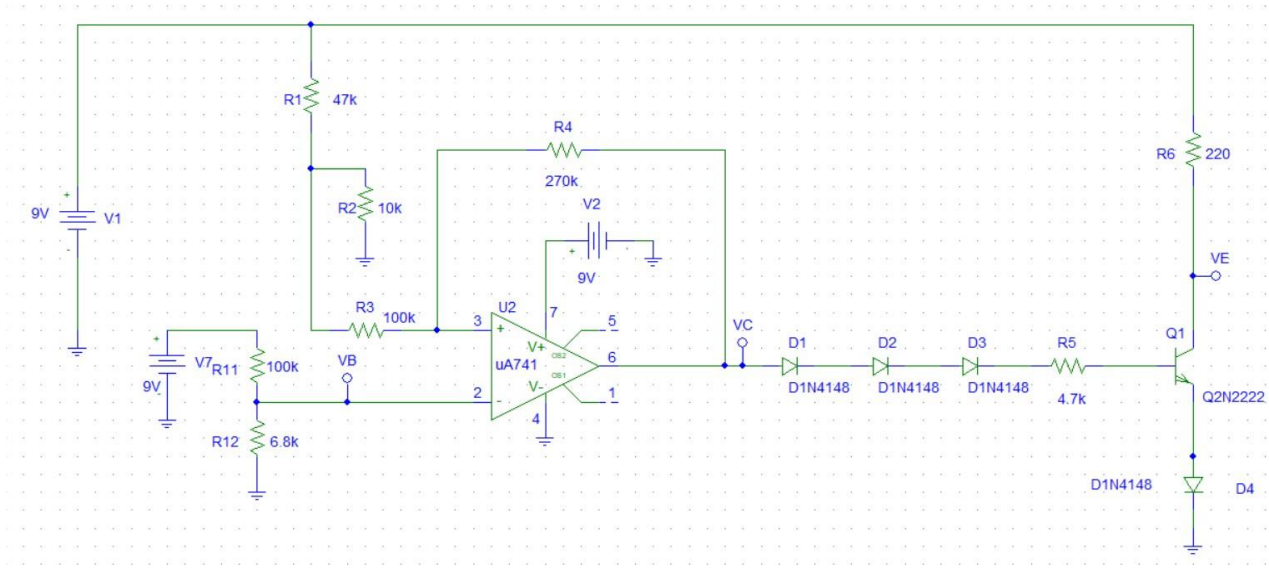

Figure 11: The circuit for LDR = 100K

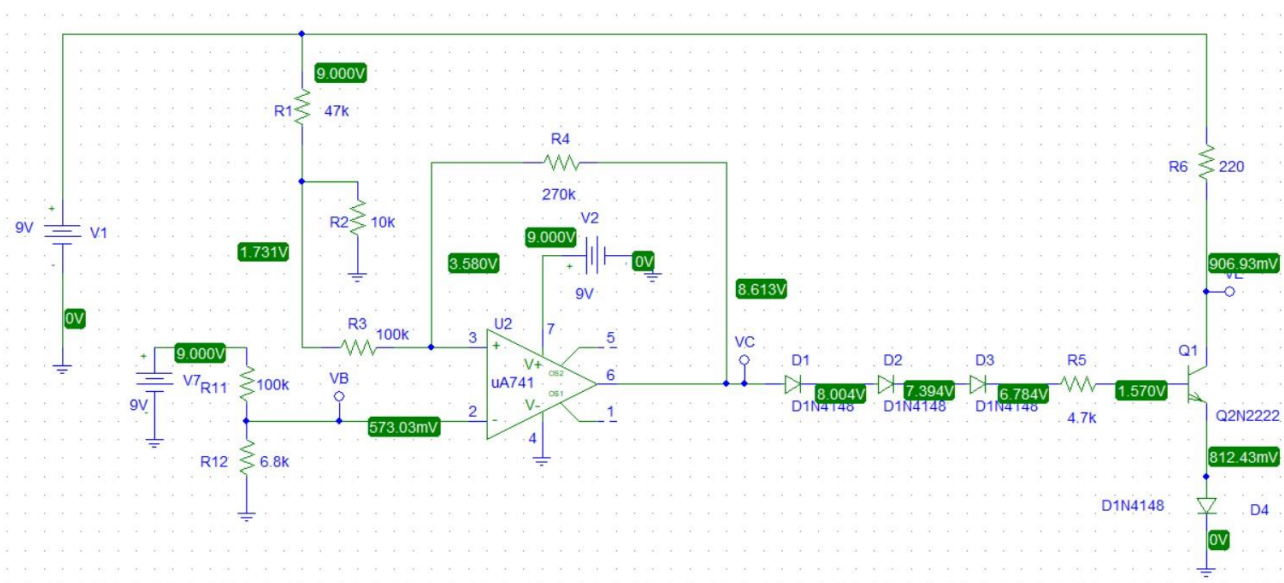

Figure 12: Simulation result for LDR = 100K

II. Simulate the circuit for LDR = 400K.

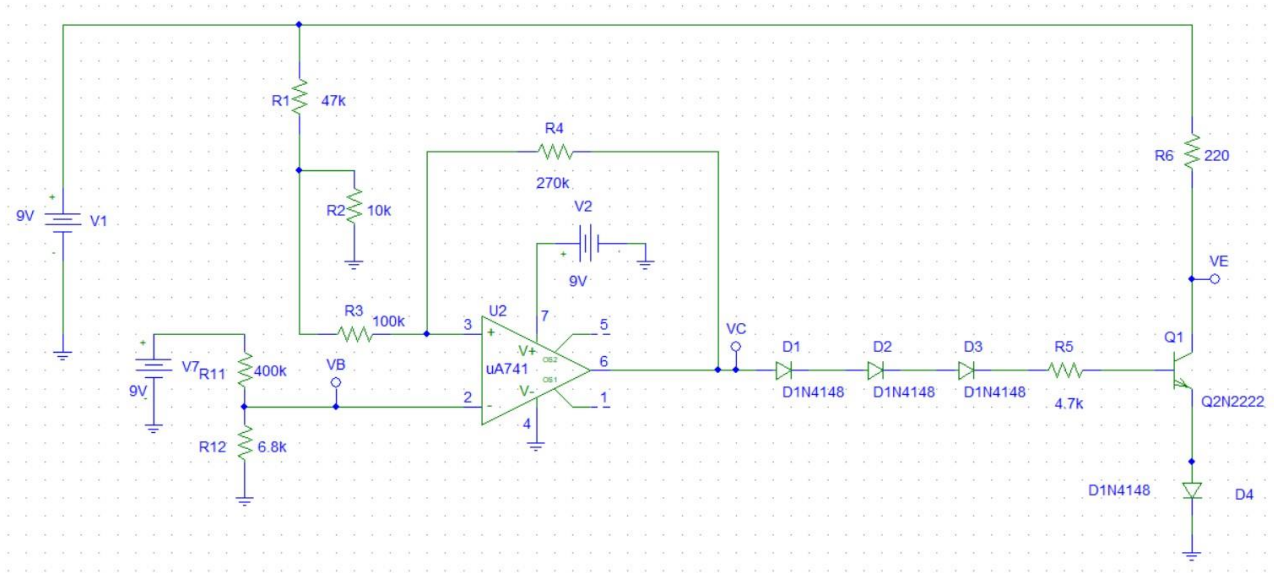

Figure 13: The circuit for LDR = 400K

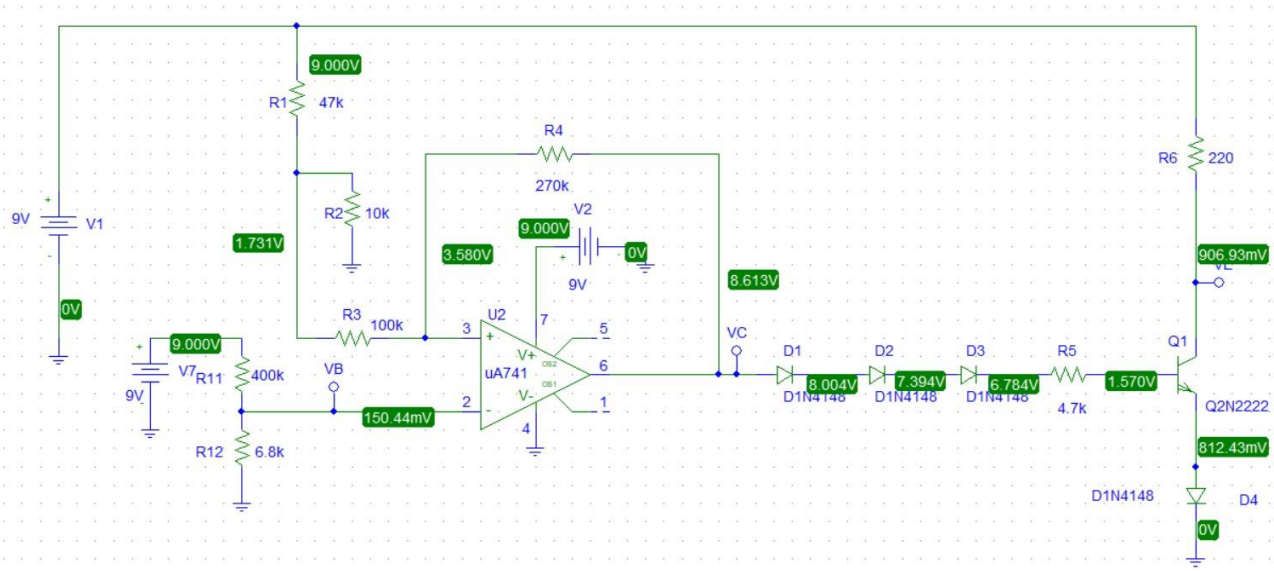

Figure 14: Simulation result for LDR = 400K

III. Simulate the circuit for LDR = 600K.

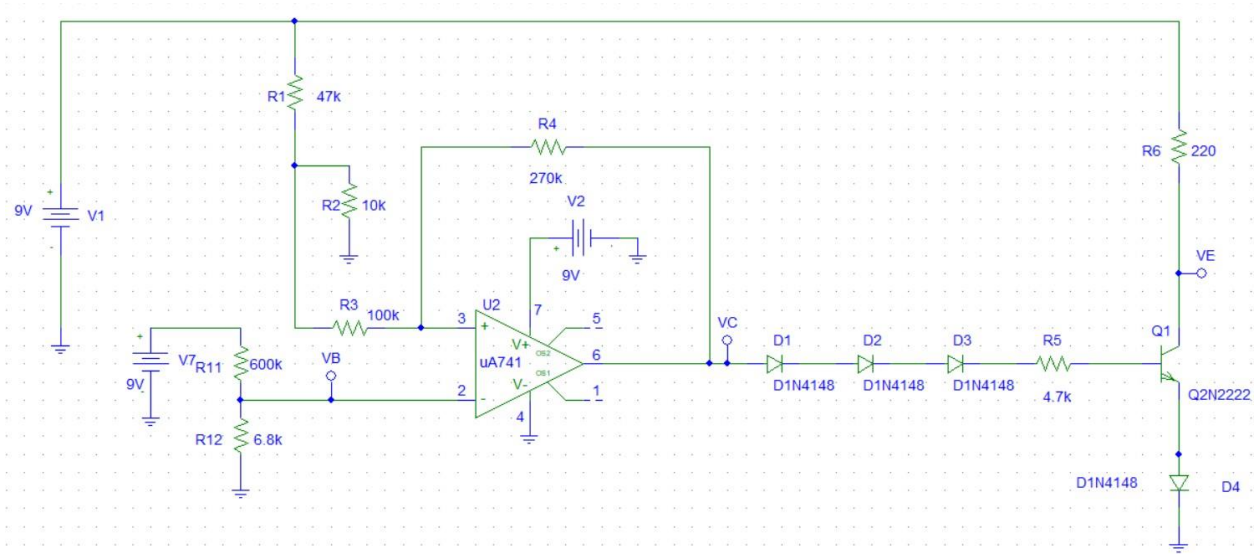

Figure 15: The circuit for LDR = 600K

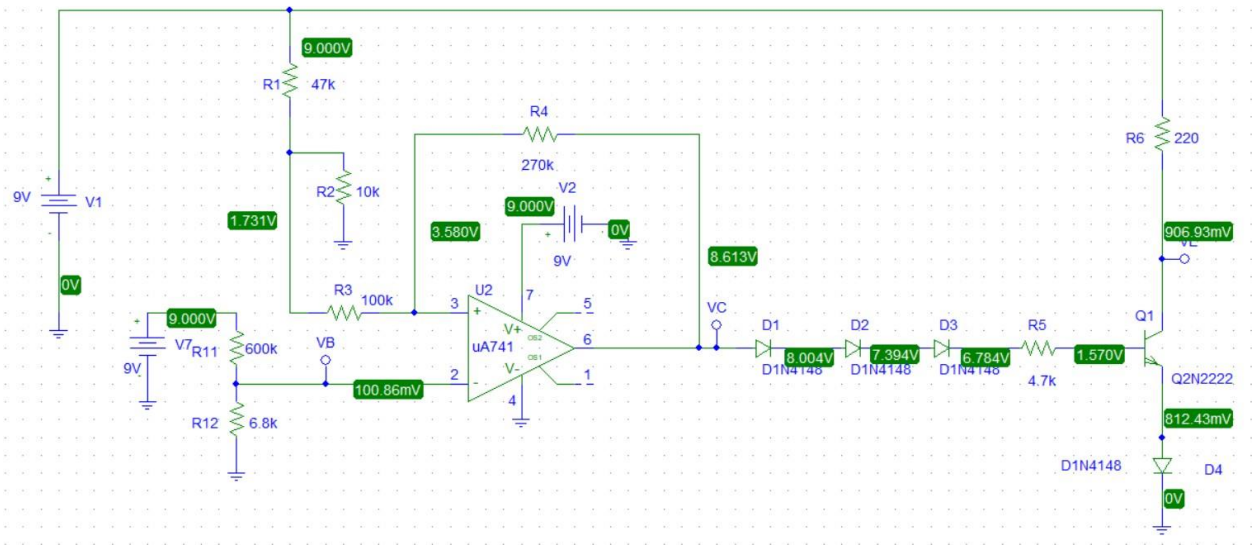

Figure 16: Simulation result for LDR = 600K

III. Part d: Replacing the LDR, the 100k pot, and the 9V with a VPWL Voltage source as shown in Figure: 17.

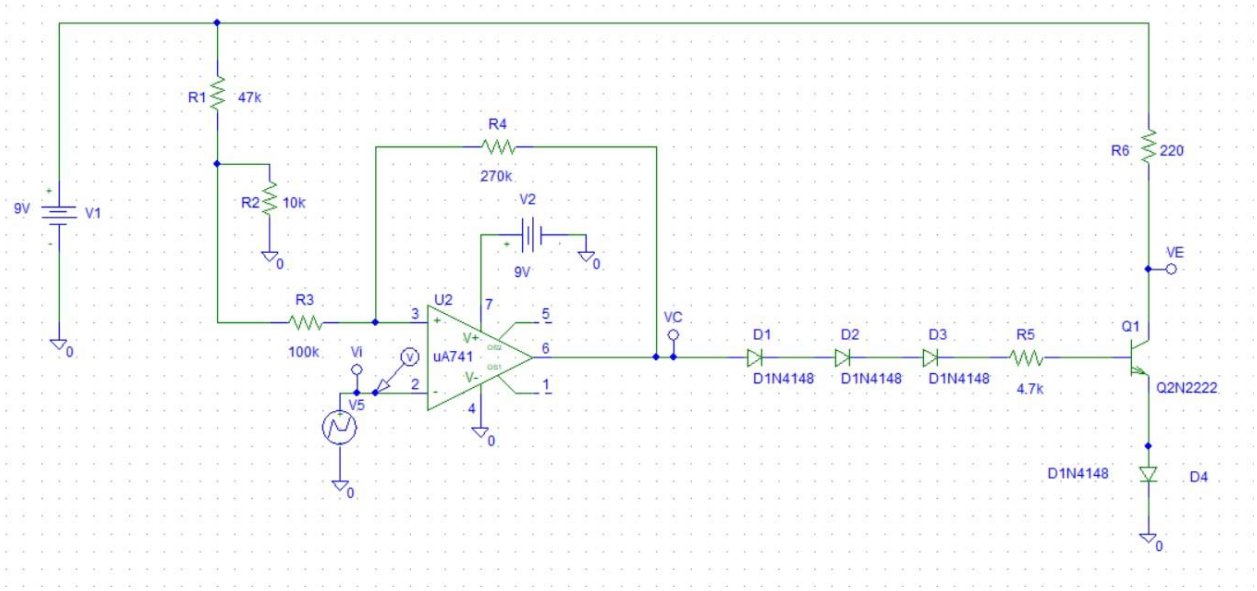

Figure 17: Circuit with V_{PWL} Voltage source.

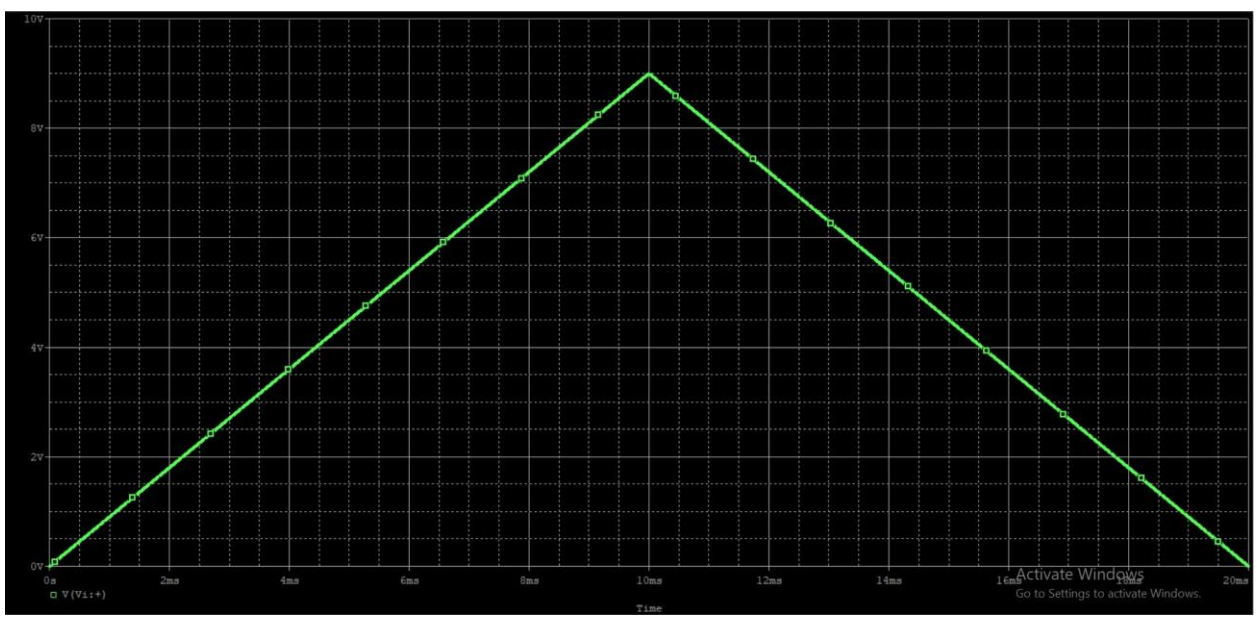

Figure 18: V_{PWL} Voltage source.

III. Part e: Simulate the circuit of Figure: 17 and plot V_C (t), and V_E (t).

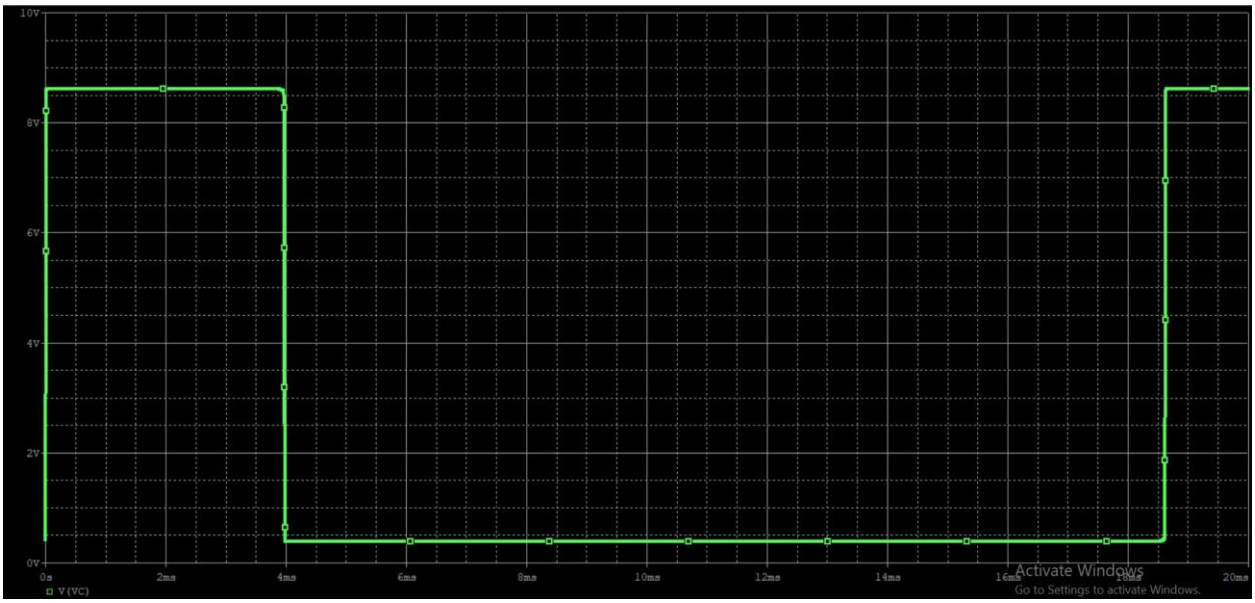

Figure 19: Plotting V_C (t) .

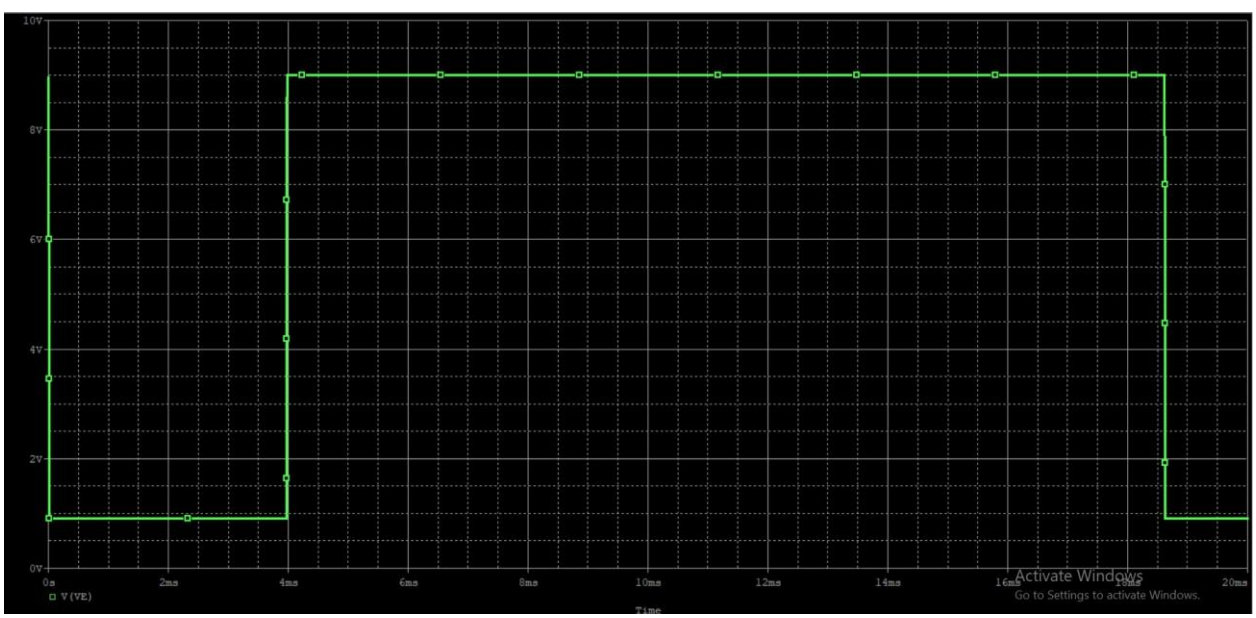

Figure 20: Plotting V_E (t) .

IV. Part f: Estimate the upper threshold and the lower threshold voltages from V_C (t).

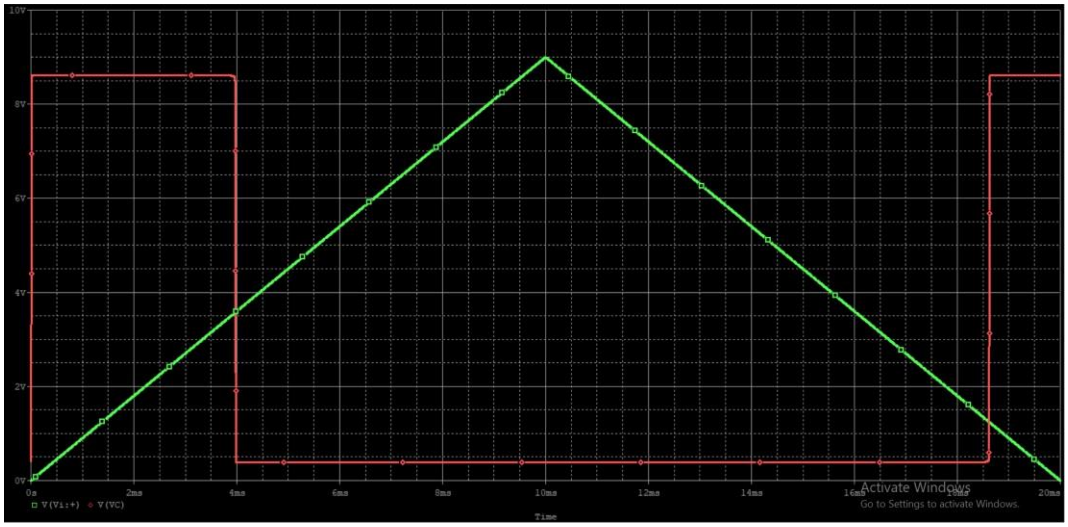

Figure 20: Plotting V_C (t) with V_{PWL} Voltage source.

V. Part g: Calculate by hand the upper threshold and the lower threshold voltages.

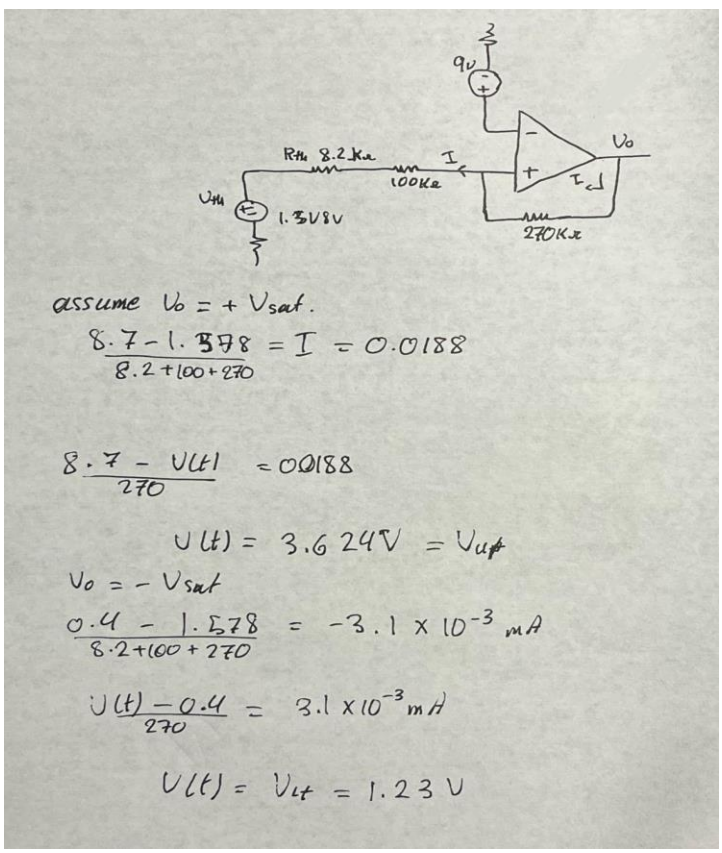

Figure 21: By hand calculation.

We obtained the values of the positive and negative V sat from the simulation: +V sat is approximately 8.7, and −V sat is 0.4. These values were used in the hand calculations and yielded a result of 3.624 for the upper threshold and 1.23 for the lower threshold. These calculated values are very close to the simulation results as you can see from the plot. The slight differences in values are normal due to rounding errors and other minor variations in the simulation parameters.

IV. Conclusion.

This project successfully designed, implemented, and analyzed an automatic night light circuit using a uA741 operational amplifier. The practical part involved constructing the circuit, adjusting the 100k potentiometer to ensure the LED turns on in darkness, and measuring node voltages and LDR resistances in both dark and light conditions. The simulation part replaced the LED with a D1N4148 diode and analyzed the circuit for different LDR values. By simulating with a VPWL voltage source, we plotted $V_C(t)$ and $V_E(t)$, identifying the upper and lower threshold voltages at the intersection points of V_C and V_{PWL}. These threshold voltages were confirmed through hand calculations, demonstrating the circuit's accurate response to ambient light changes. The project effectively combined practical implementation and simulation to validate the circuit's functionality as an automatic night light.

V. References

[1]

www.st.com www.ti.com

[2]

https://en.wikipedia.org/

[3]

Components101 - Electronic Components Pinouts, Details & Datasheets

[4]

www.watelectronics.com

[5]

Resistor - Wikipedia

[6]

Potentiometer: Definition, Types, And Working Principle (electrical4u.com)