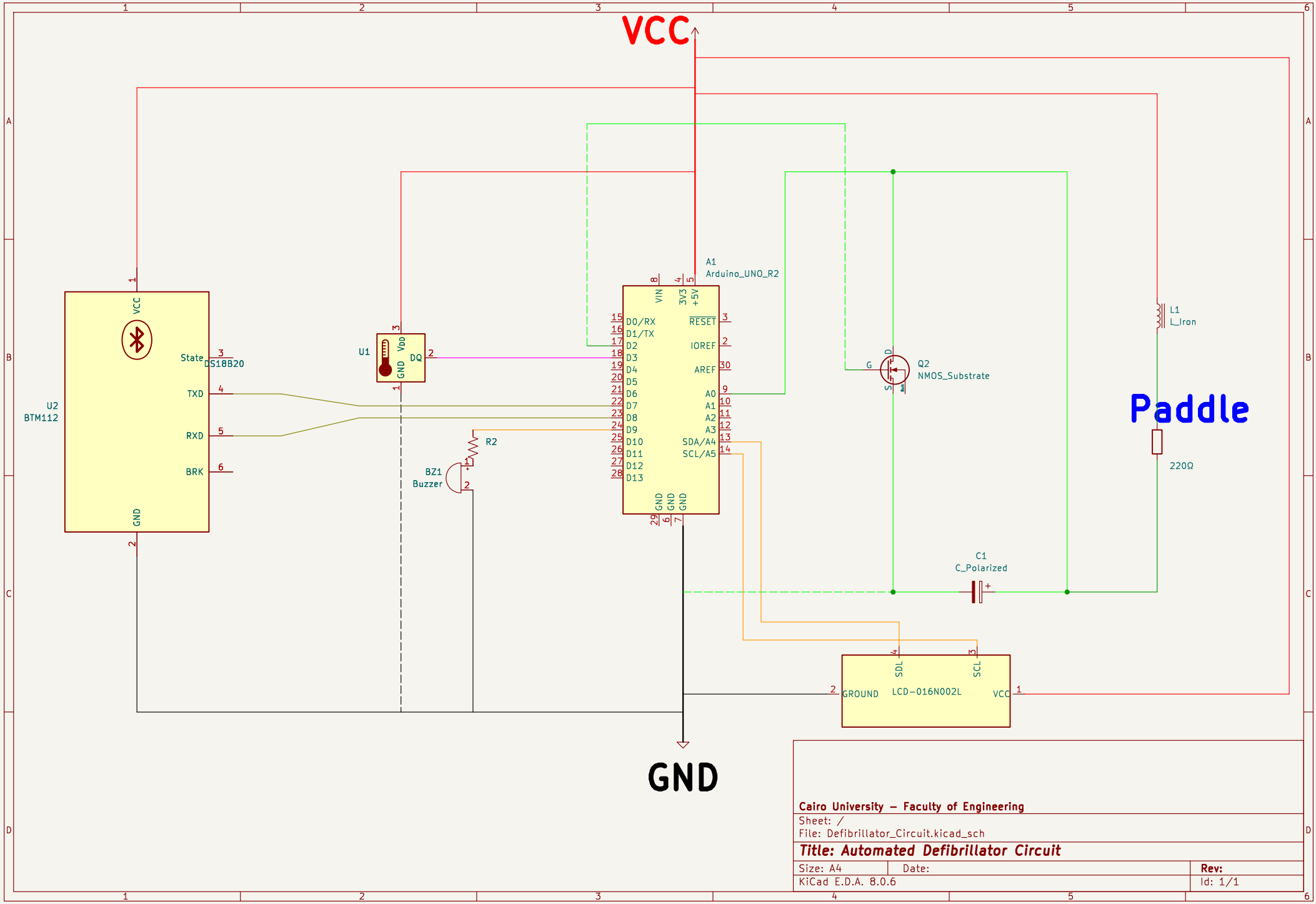

Cairo University – Faculty of Engineering

Sheet: /

File: Defibrillator_Circuit.kicad_sch

Title: Automated Defibrillator Circuit

Size: A4	Date:	Rev:
KiCad E.D.A. 8.0.6		Id: 1/1