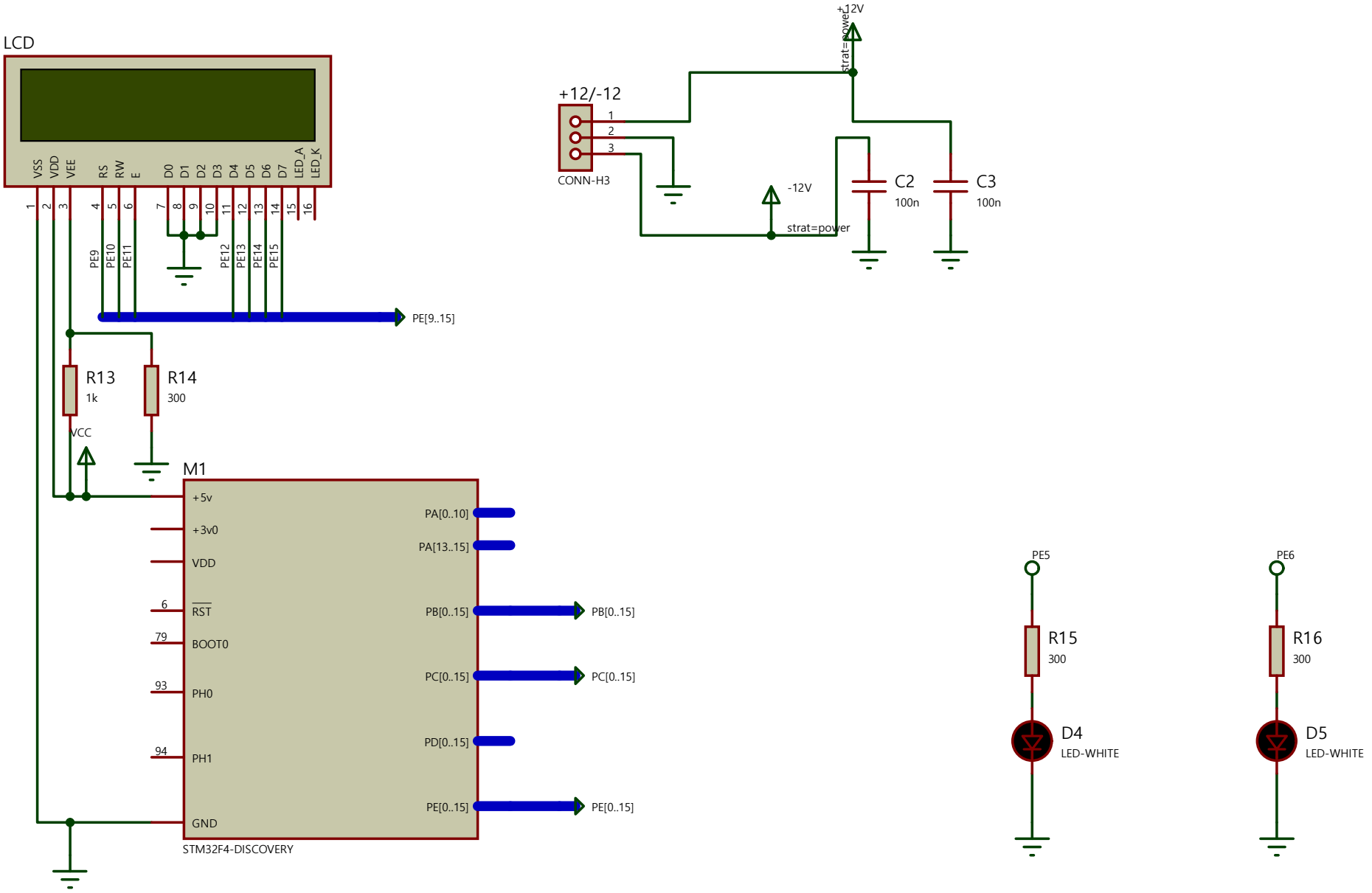

ELECTRONICS & ROBOTICS WITH PLYMOUTH UNIVERSITY

Faculty of Science & Engineering

School of Computing, Electronics & Mathematics

Title. Infrared Tx	Document No. @DOCNO	Rev. No. @REV	Sheet. 1/4
Sheet Title. Micro - LCD	Created. 24/11/2016 @05:04:58	Modified. 24/11/2016 @12:15:20	
Author. @AUTHOR	File. yassoooo.pdsprj		

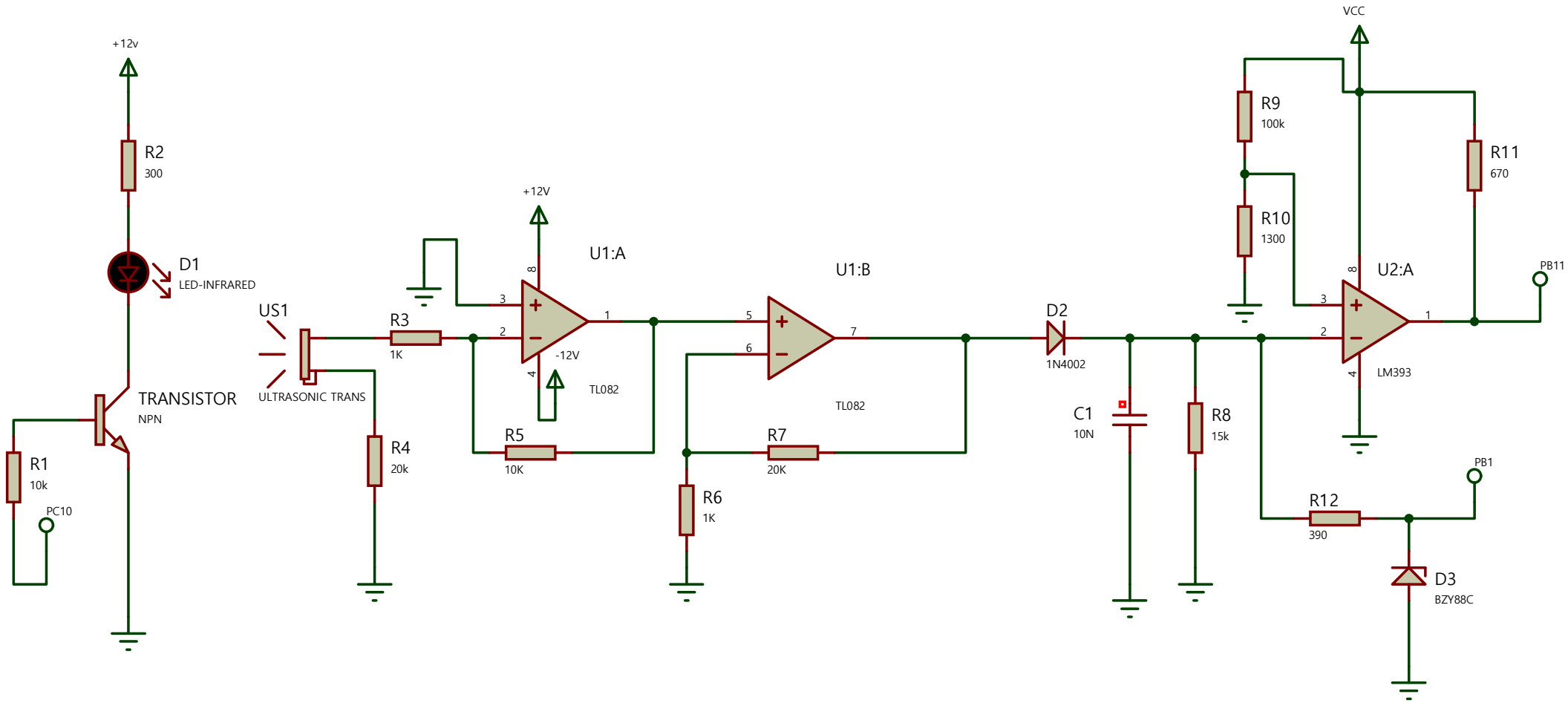

ELECTRONICS & ROBOTICS WITH PLYMOUTH UNIVERSITY	**Faculty of Science & Engineering** **School of Computing, Electronics & Mathematics**	Title. Infrared Tx	Document No. @DOCNO	Rev. No. @REV	Sheet. 2/4
		Sheet Title. Ultrasonic RX	Created. 24/11/2016 @05:04:58	Modified. 24/11/2016 @12:15:20	
		Author. @AUTHOR	File. yassoooo.pdsprj		