26.3±0.05		*	1/1	
14.75±0.05		*	1/1	
2-6.3±0.05		*	1/1	
4.2±0.2		*	1/1	
6.8±0.1		*	1/1	
23.3±0.2		*	1/1	
14±0.05		*	1/1	
2-6±0.05		*	1/1	
↧1.5±0.1		*	1/1	
0.1		*	1/1	
1±0.05		Ⓜ	1/1	
Ep-Cu/Sn1m/:B⁷ (MAX 3gm)		*	1/1	
5gg/cm2		*	1/1	

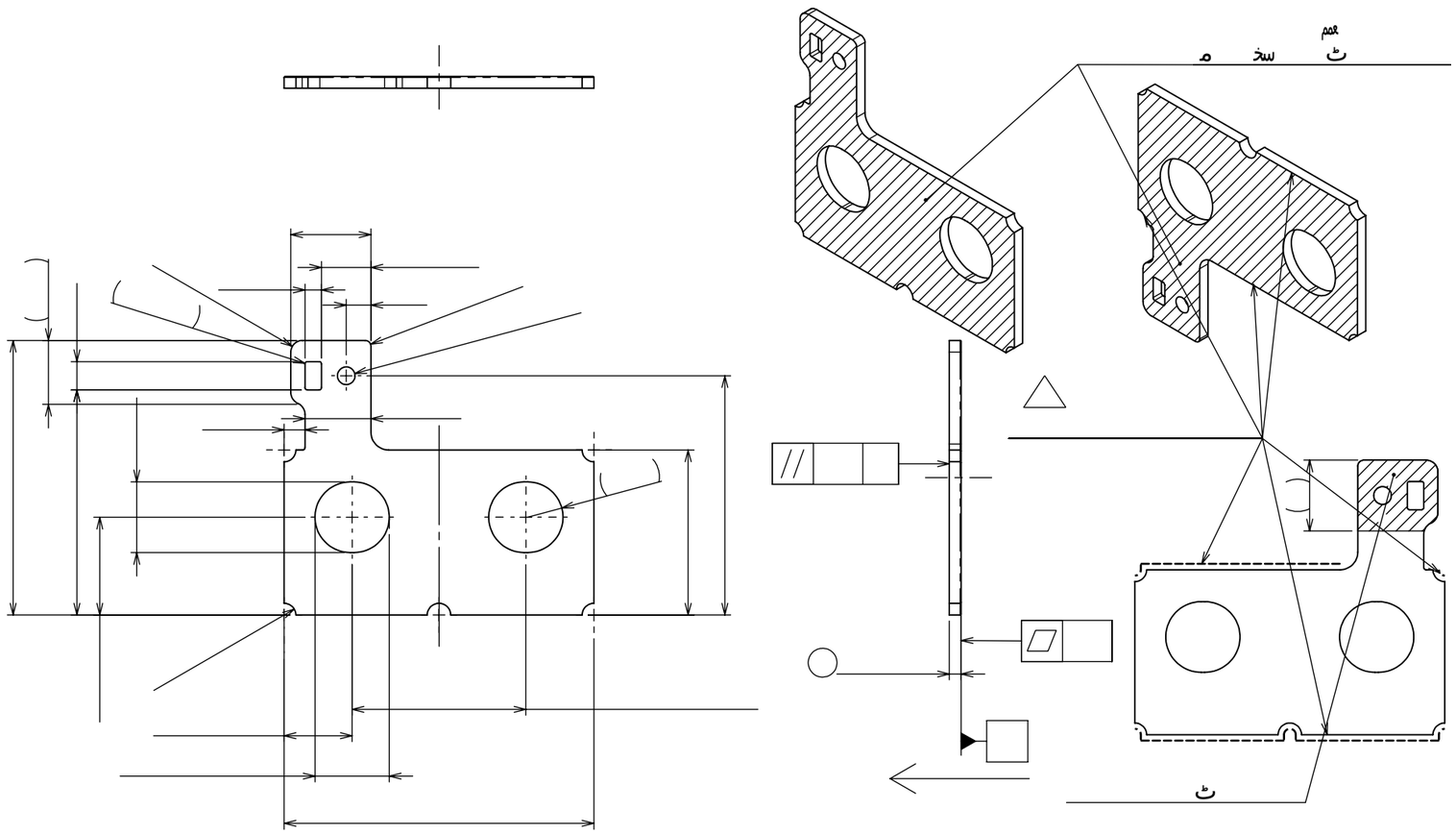

	1	2	3

Confidential
This document is the property of NIPPON MEKTRON,LTD.
and will not be copied without written permission.

TC05-E02/01

PAGE