13.35±0.05		*	1/1		
6.3±0.05		*	1/1		
4.2±0.1		*	1/1		
6.8±0.2		*	1/1		
23.3±0.2		*	1/1		
16.6±0.05		*	1/1		
6±0.05		*	1/1		
1.5±0.1		*	1/1		
0.1		*	1/1		
1±0.05		M	1/1		
Ep-Cu/Sn1m/:B 7 (MAX 3gm)		*	1/1		
5gg/cm2		*	1/1		

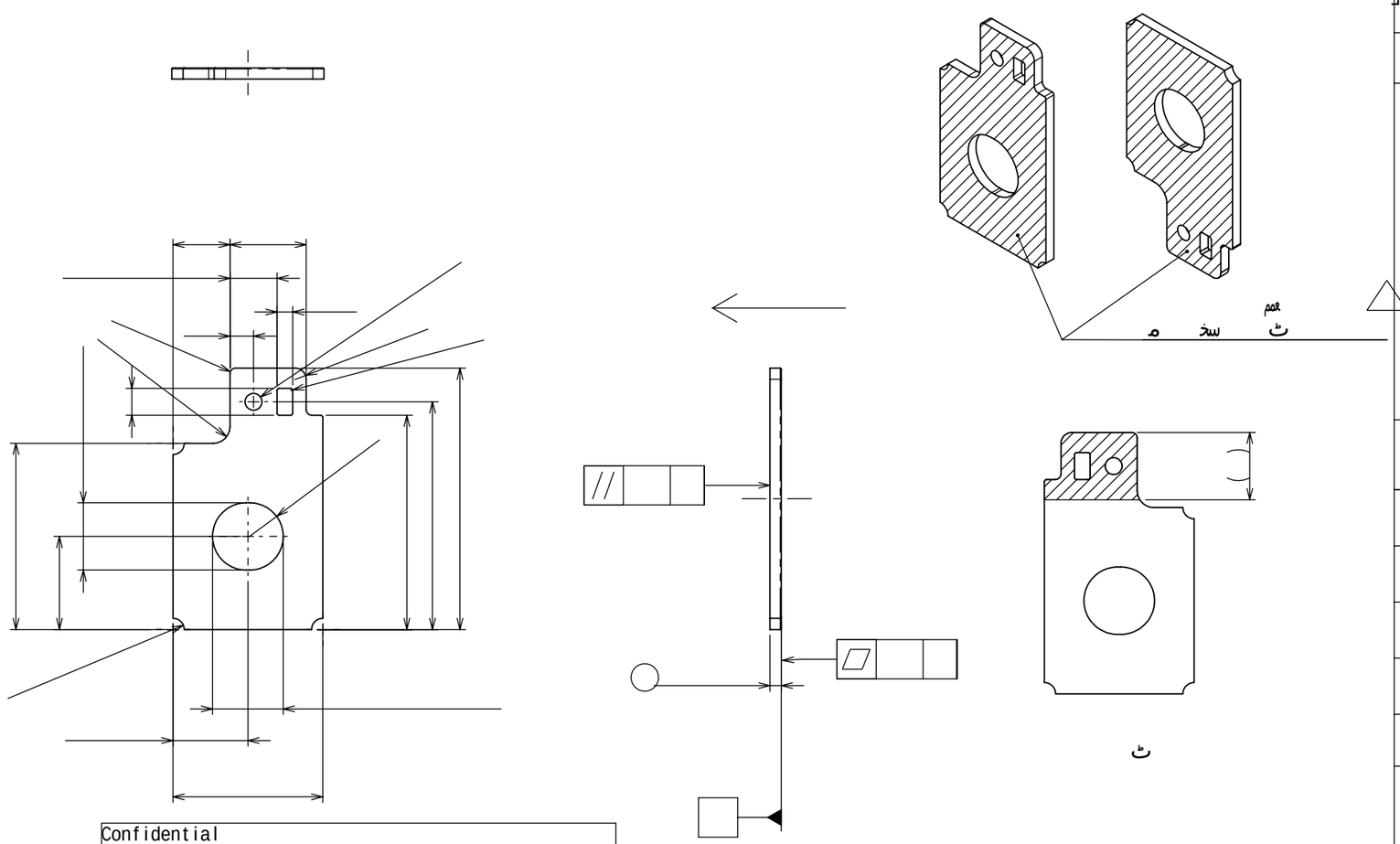

Confidential
This document is the property of NIPPON MEKTRON,LTD.
and will not be copied without written permission.

TC05-E02/01

PAGE