VIT®

Vellore Institute of Technology

(Deemed to be University under section 3 of UGC Act, 1956)

Modelling of All terrain vehicle based on Theo Jensen's Mechanism

Engineering Innovation and Modelling (BAMEE205) Project

By:

Yaswanth Uppalapu

25BST0080

Under Guidance of:

Dr. Ashish Alex Sam

School of Mechanical Engineering, VIT Vellore

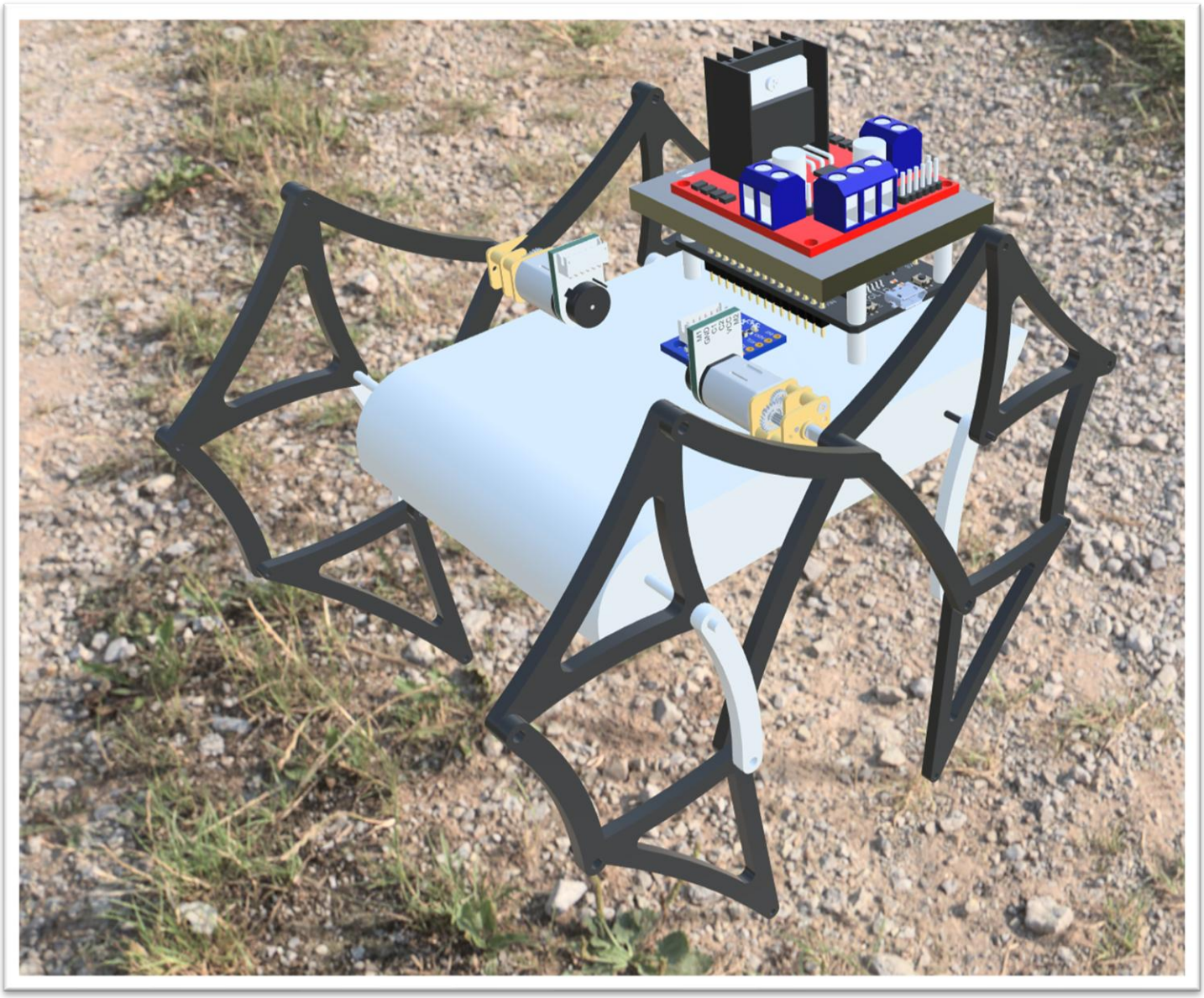

FIG 1.1 (3D MODEL OF ROBOT)

Theoretical Background

Theo Jensen's Mechanism(Linkage)

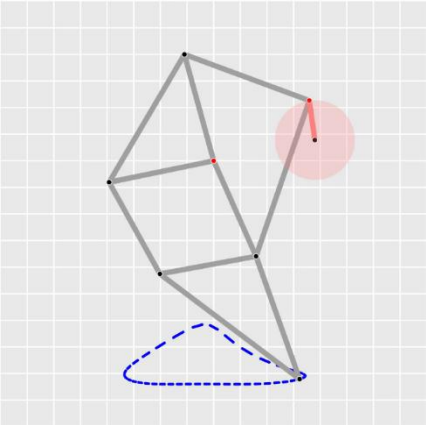

The Theo Jansen's mechanism is a 11-bar planar linkage created by Dutch artist Theo Jansen that converts the rotational motion of a crank into a walking, stepping motion. It is famously used in his kinetic sculptures, called Strandbeests

The central 'crank' link moves in circles as it is actuated by a rotary actuator such as an electric motor. All other links and pin joints are unactuated and move because of the motion imparted by the crank. Their positions and orientations are uniquely defined by specifying the crank angle and hence the mechanism has only one degree of freedom (1-DoF).[5] The kinematics and dynamics of the Jansen mechanism have been exhaustively modelled using circle intersection method and bond graphs (Newton–Euler mechanics).[6] These models can be used to rate the actuator torque and in design of the hardware and controller for such a system.

Robot Assembly and Design

Drivetrain:

Robot uses tank steering to drive around and all of the electronic components are placed on rectangular chassis which holds them in place. This system of steering enhances manuverability and also reduces control surfaces(Two motors)

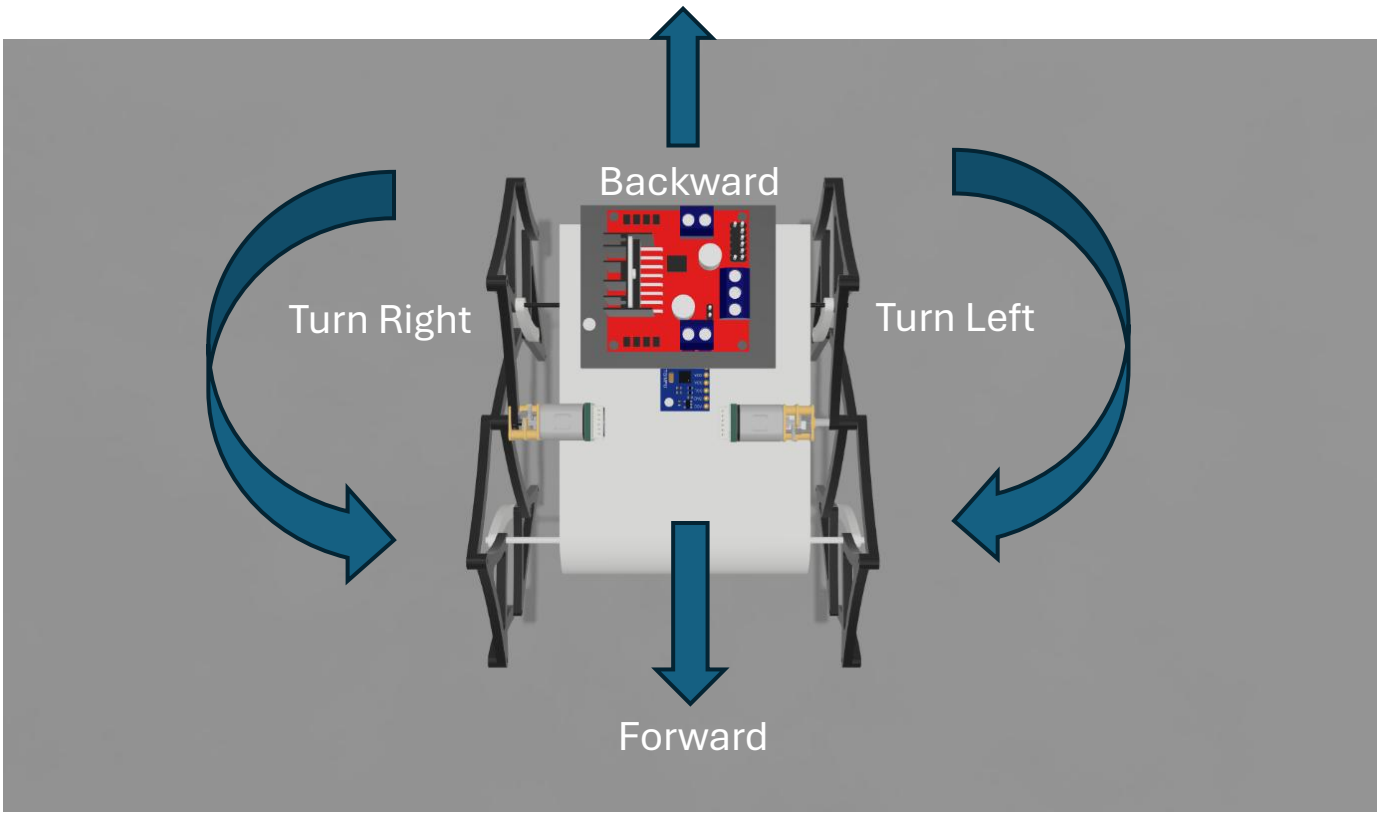

Leg design:

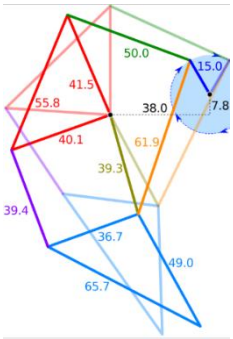

The linkage includes the central '[crank]' link moves in circles as it is actuated by a rotary actuator such as an electric motor. All other links and pin joints are unactuated and move because of the motion imparted by the crank. Their positions and orientations are uniquely defined by specifying the crank angle and hence the mechanism has only one Degree of Freedom (1-DoF)

The existing design not structurally capable to withstand the load of the robot so a modified version of the linkage is made preserving the ratios in Theo Jensen's linkage and enhancing structural properties the CAD drawings of the leg are

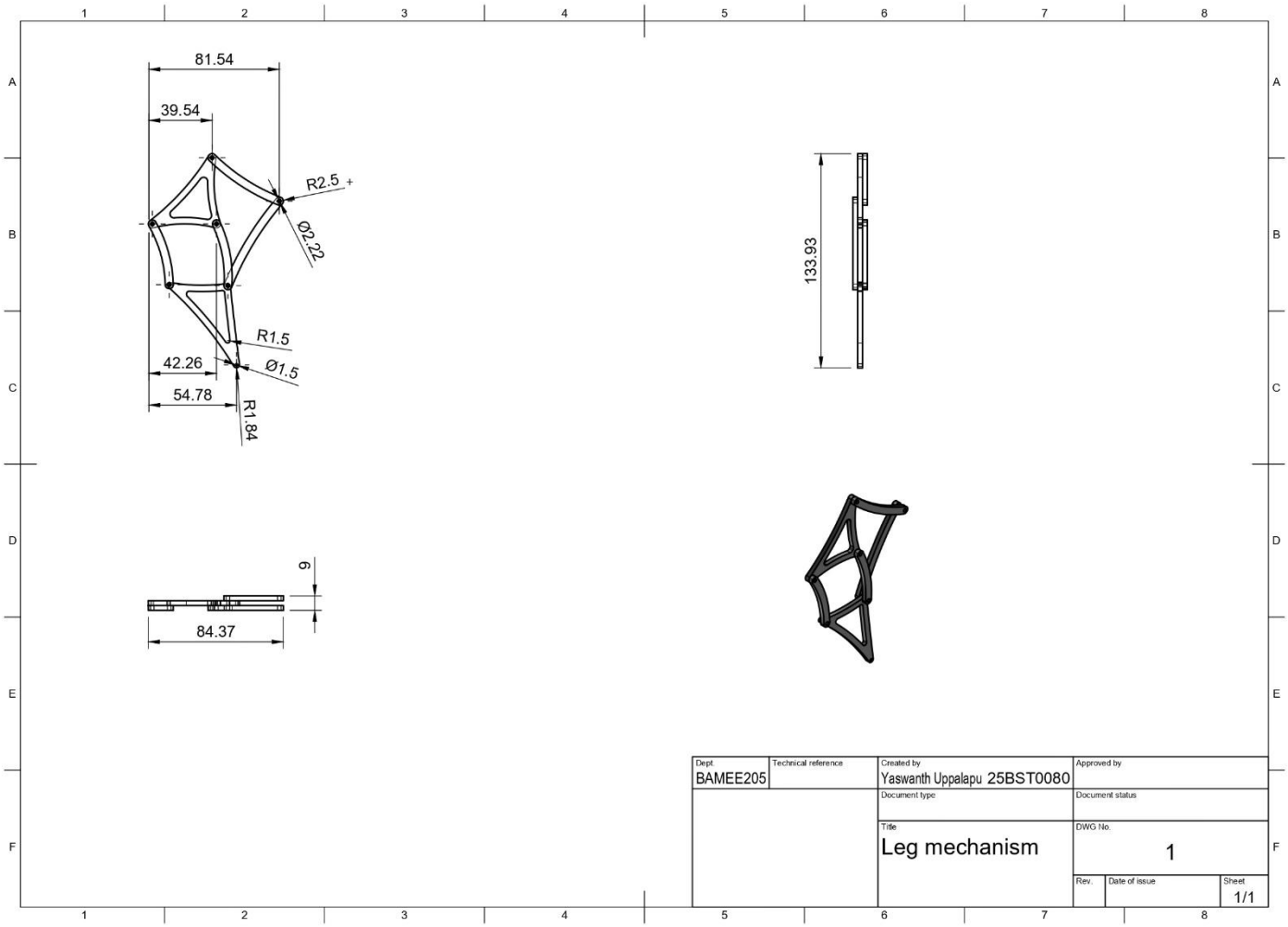

given below.

Chassis Design:

The chassis is made of ABS plastic supports weight of all electronic components and legs.

The CAD Drawing of the chassis is given below

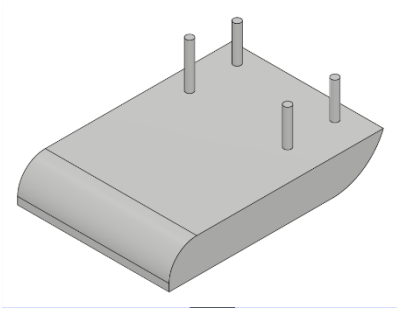

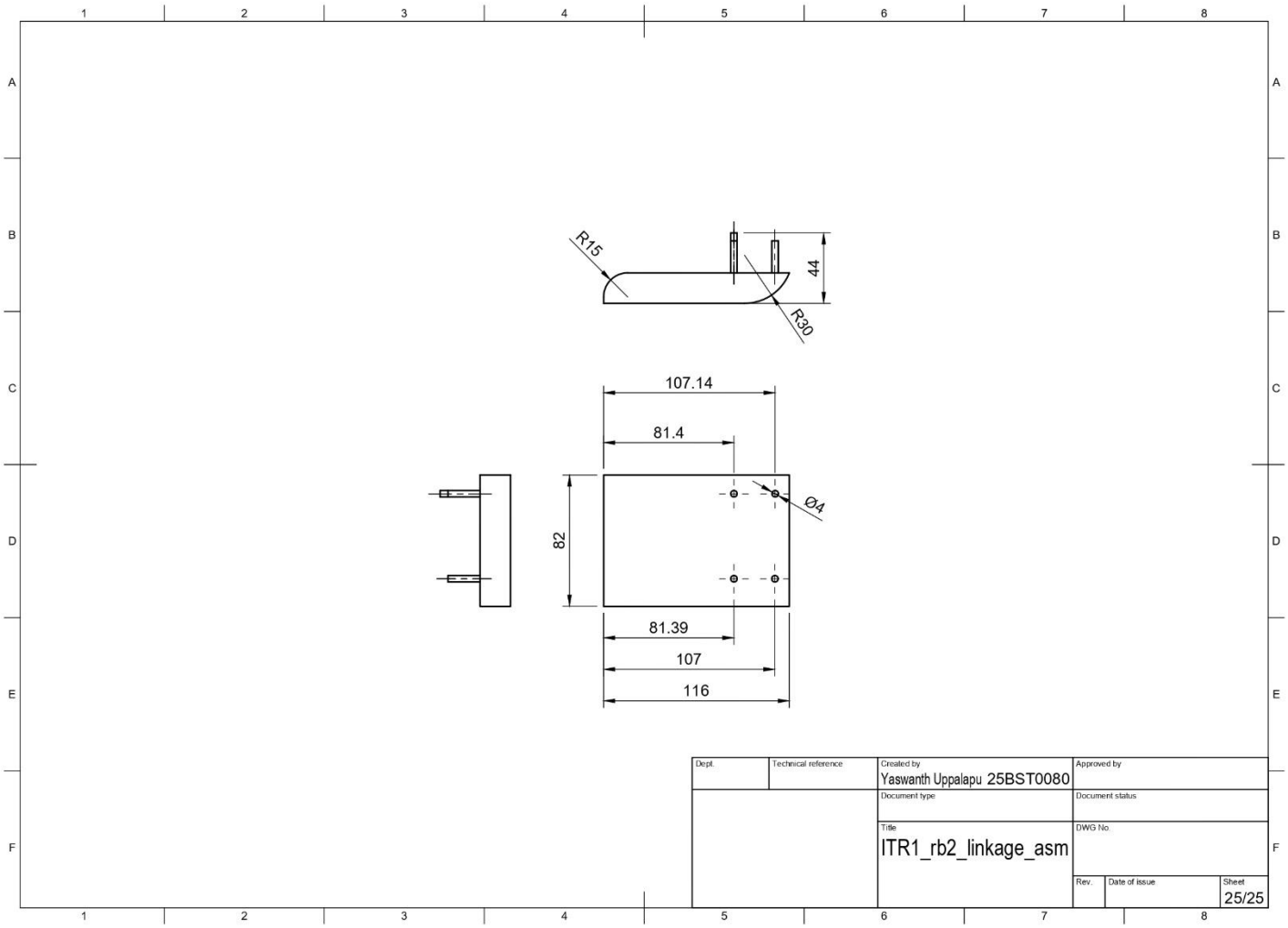

Parts List			
Item	Qty	Part Number	Material
1	2	2026-04-08-16-35-53-242	Stahl
2	1	2026-04-24-01-43-44-232	ABS Plastic
3	1	2026-04-24-01-43-44-240	ABS Plastic
4	1	2026-04-24-01-43-44-244	ABS Plastic
5	1	2026-04-24-01-43-44-247	ABS Plastic
6	1	2026-04-24-01-43-44-251	ABS Plastic
7	1	2026-04-24-01-43-44-254	ABS Plastic
8	1	2026-04-24-01-43-44-258	ABS Plastic
9	1	2026-04-24-01-43-44-261	ABS Plastic
10	1	2026-04-24-01-43-44-265	ABS Plastic
11	1	2026-04-24-01-43-44-269	ABS Plastic
12	1	2026-04-24-01-43-44-273	ABS Plastic
13	1	2026-04-24-01-43-44-276	ABS Plastic
14	1	2026-04-24-01-43-44-280	ABS Plastic
15	1	2026-04-24-01-43-44-284	ABS Plastic
16	1	2026-04-24-01-43-44-289	ABS Plastic
17	1	2026-04-24-01-43-44-293	ABS Plastic
18	1	2026-04-24-01-43-44-298	ABS Plastic
19	1	2026-04-24-01-43-44-302	ABS Plastic
20	1	2026-04-24-01-43-44-306	ABS Plastic
21	1	2026-04-24-01-43-44-311	ABS Plastic
22	1	2026-04-24-01-43-44-315	ABS Plastic
23	1	2026-04-24-01-43-44-320	Steel
24	1	2026-04-24-01-43-44-325	ABS Plastic
25	1	2026-04-23-20-16-36-250	Steel
26	1	2026-04-23-20-22-40-197	Steel

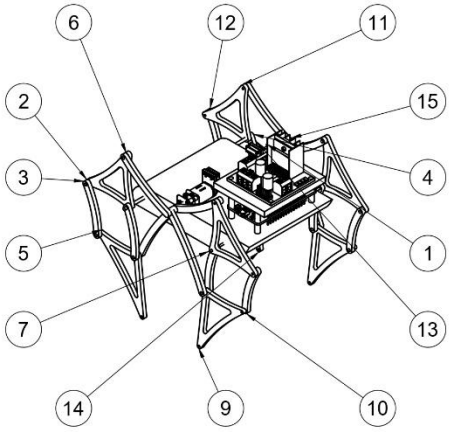

Dept	Technical reference	Created by	Approved by
BAMEE205		Yaswanth Uppalapu 25BST0080	
		Document type	Document status
		Title: ROBOT ASSEMBLY	DWG No.
			Rev. / Date of issue / Sheet 1/25

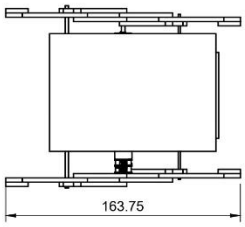

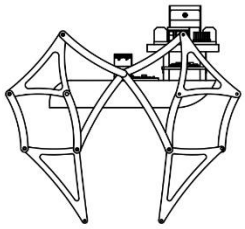

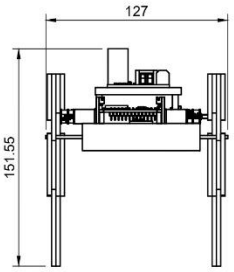

Dept	Technical reference	Created by	Approved by
		Yaswanth Uppalapu 25BST0080	
		Document type	Document status
		Title: ROBOT ASSEMBLY	DWG No.
			Rev. / Date of issue / Sheet 2/25

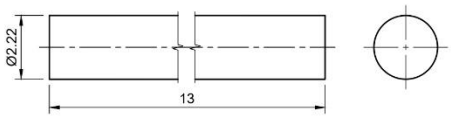

Dept.	Technical reference	Created by	Approved by
		Yaswanth Uppalapu 25BST0080	
		Document type	Document status
		Title: ITR1_rb2_linkage_asm	DWG No.
			Rev. / Date of issue / Sheet 24/25

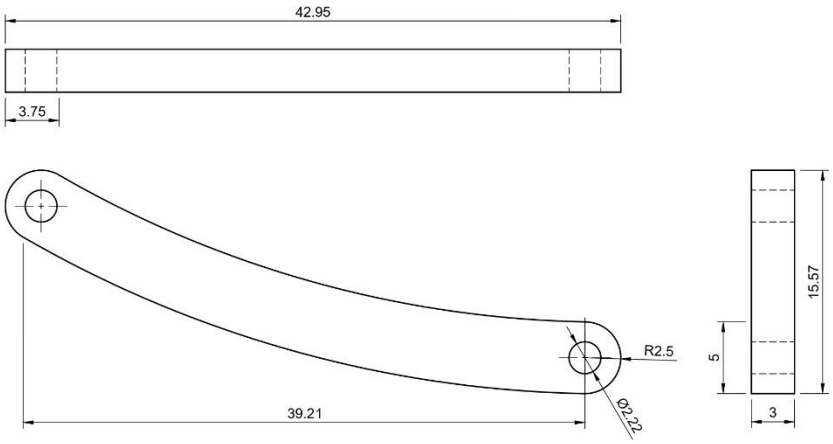

Dept.	Technical reference	Created by	Approved by
		Yaswanth Uppalapu 25BST0080	
		Document type	Document status
		Title: ITR1_rb2_linkage_asm	DWG No.
			Rev. / Date of issue / Sheet 23/25

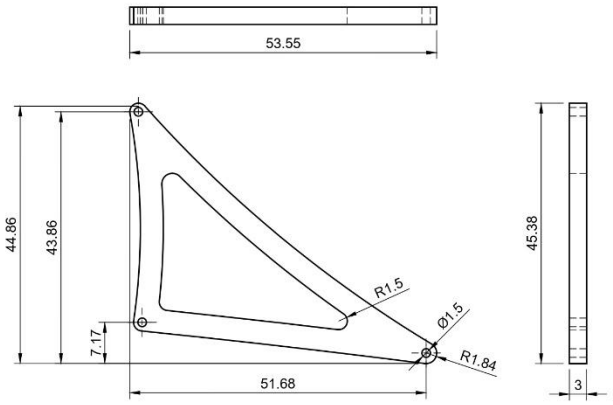

Dept	Technical reference	Created by Yaswanth Uppalapu 25BST0080	Approved by
		Document type	Document status
		Title ITR1_rb2_linkage_asm	DWG No.
			Rev. / Date of issue / Sheet 22/25

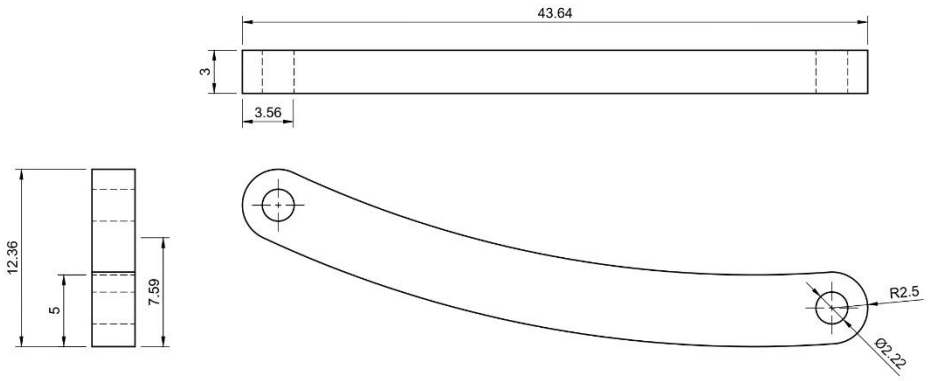

Dept	Technical reference	Created by Yaswanth Uppalapu 25BST0080	Approved by
		Document type	Document status
		Title ITR1_rb2_linkage_asm	DWG No.
			Rev. / Date of issue / Sheet 21/25

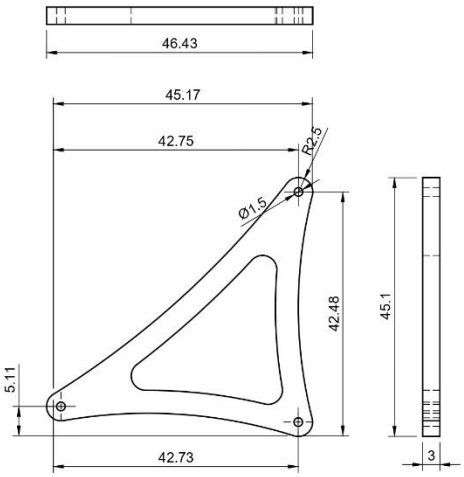

Dept	Technical reference	Created by	Approved by
		Yaswanth Uppalapu 25BST0080	
		Document type	Document status
		Title: ITR1_rb2_linkage_asm	DWG No.
			Rev. / Date of issue / Sheet 20/25

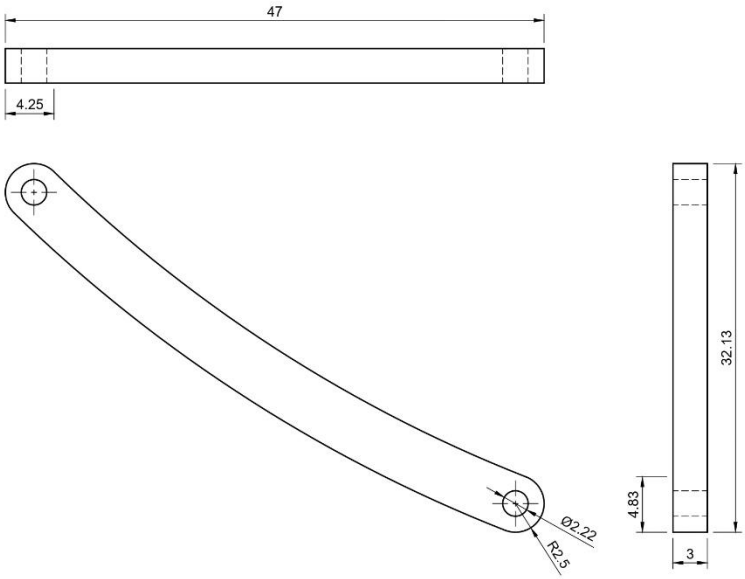

Dept	Technical reference	Created by	Approved by
		Yaswanth Uppalapu 25BST0080	
		Document type	Document status
		Title: ITR1_rb2_linkage_asm	DWG No.
			Rev. / Date of issue / Sheet 19/25

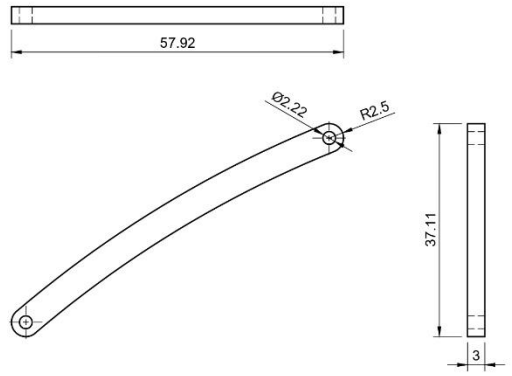

Dept	Technical reference	Created by	Approved by
		Yaswanth Uppalapu 25BST0080	
		Document type	Document status
		Title: ITR1_rb2_linkage_asm	DWG No.
			Rev. / Date of issue / Sheet 18/25

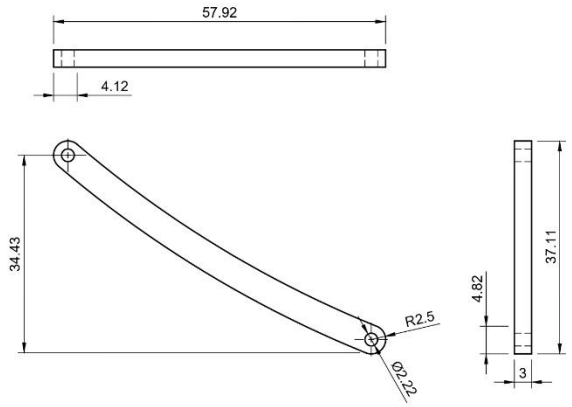

Dept	Technical reference	Created by	Approved by
		Yaswanth Uppalapu 25BST0080	
		Document type	Document status
		Title: ITR1_rb2_linkage_asm	DWG No.
			Rev. / Date of issue / Sheet 17/25

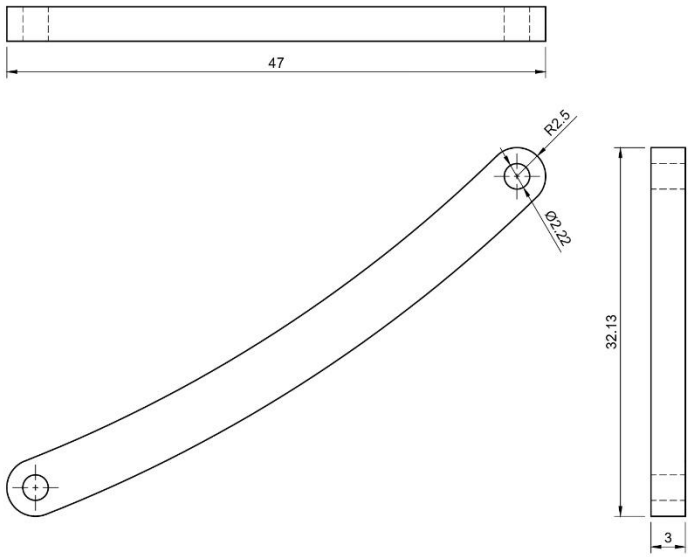

Dept	Technical reference	Created by	Approved by
		Yaswanth Uppalapu 25BST0080	
		Document type	Document status
		Title: ITR1_rb2_linkage_asm	DWG No.
			Rev. / Date of issue / Sheet 16/25

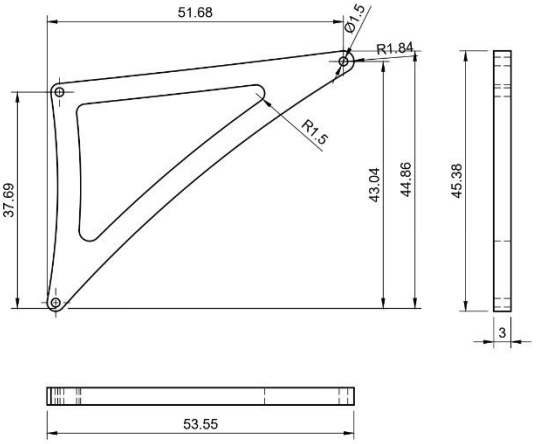

Dept	Technical reference	Created by	Approved by
		Yaswanth Uppalapu 25BST0080	
		Document type	Document status
		Title: ITR1_rb2_linkage_asm	DWG No.
			Rev. / Date of issue / Sheet 15/25

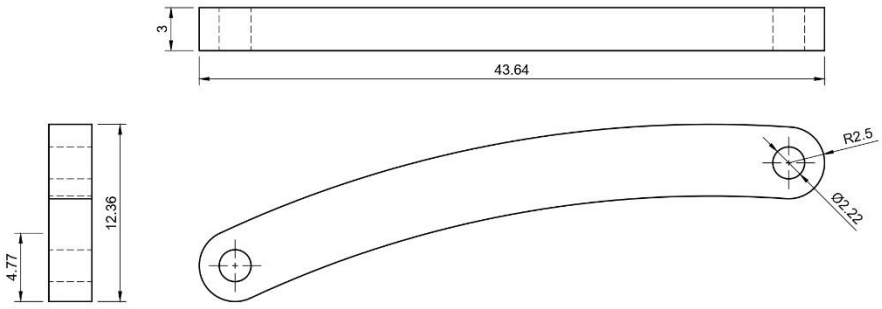

Dept	Technical reference	Created by	Approved by
		Yaswanth Uppalapu 25BST0080	
		Document type	Document status
		Title: ITR1_rb2_linkage_asm	DWG No.
			Rev. / Date of issue / Sheet 14/25

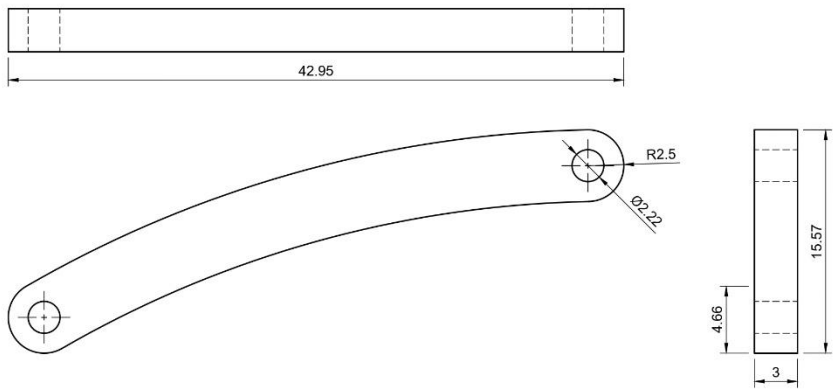

Dept	Technical reference	Created by	Approved by
		Yaswanth Uppalapu 25BST0080	
		Document type	Document status
		Title: ITR1_rb2_linkage_asm	DWG No.
			Rev. / Date of issue / Sheet 13/25

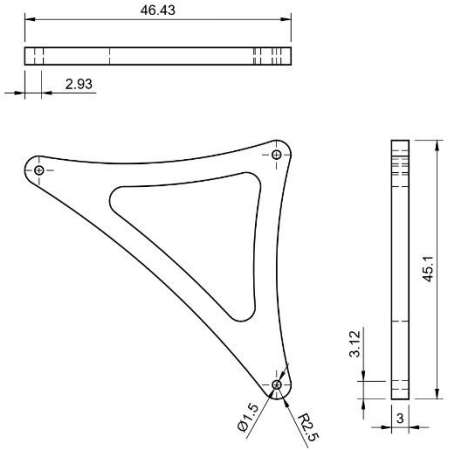

Dept	Technical reference	Created by	Approved by
		Yaswanth Uppalapu 25BST0080	
		Document type	Document status
		Title: ITR1_rb2_linkage_asm	DWG No.
			Rev. / Date of issue / Sheet 12/25

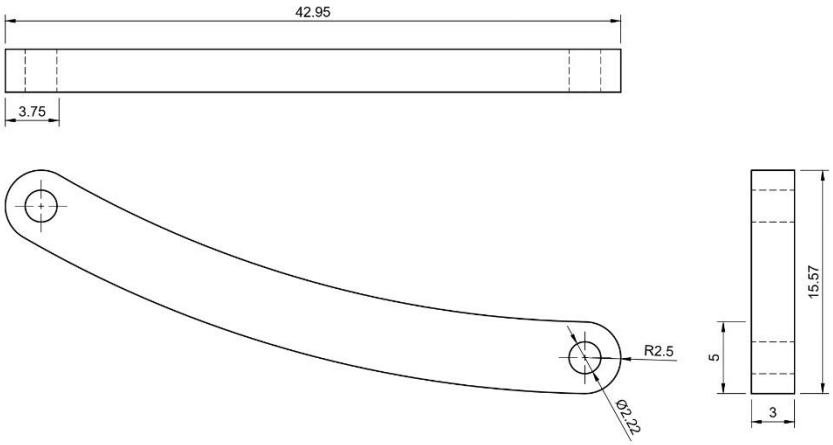

Dept	Technical reference	Created by	Approved by
		Yaswanth Uppalapu 25BST0080	
		Document type	Document status
		Title: ITR1_rb2_linkage_asm	DWG No.
			Rev. / Date of issue / Sheet 11/25

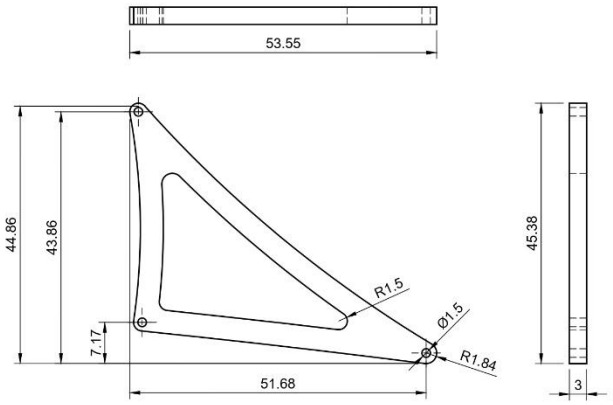

Dept	Technical reference	Created by Yaswanth Uppalapu 25BST0080	Approved by
		Document type	Document status
		Title ITR1_rb2_linkage_asm	DWG No.
			Rev. / Date of issue / Sheet 10/25

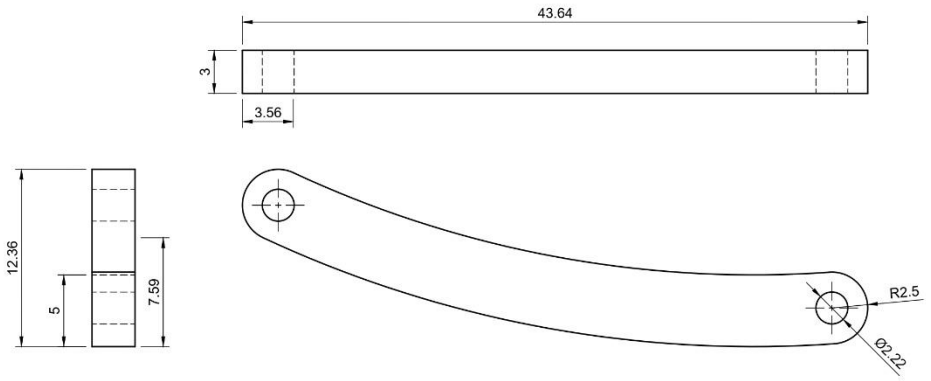

Dept	Technical reference	Created by Yaswanth Uppalapu 25BST0080	Approved by
		Document type	Document status
		Title ITR1_rb2_linkage_asm	DWG No.
			Rev. / Date of issue / Sheet 9/25

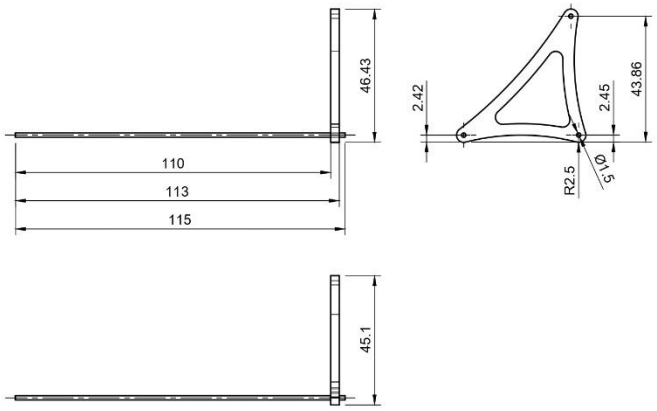

Dept	Technical reference	Created by	Approved by
		Yaswanth Uppalapu 25BST0080	
		Document type	Document status
		Title: ITR1_rb2_linkage_asm	DWG No.
			Rev. / Date of issue / Sheet 8/25

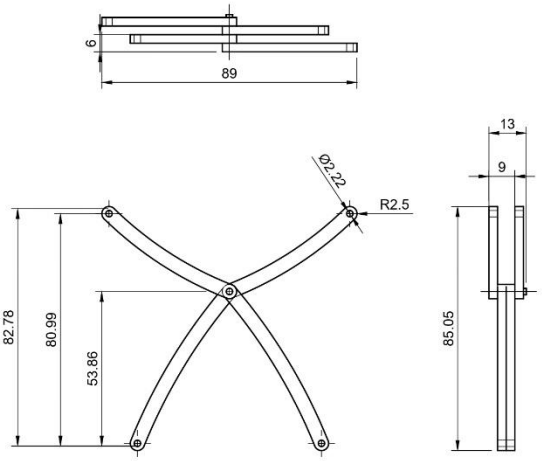

Dept	Technical reference	Created by	Approved by
		Yaswanth Uppalapu 25BST0080	
		Document type	Document status
		Title: ITR1_rb2_linkage_asm	DWG No.
			Rev. / Date of issue / Sheet 7/25

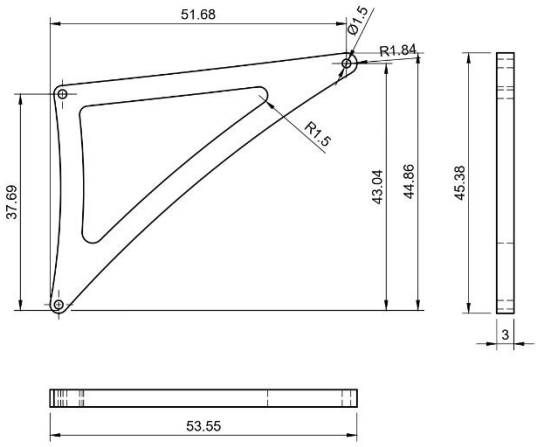

Dept	Technical reference	Created by	Approved by
		Yaswanth Uppalapu 25BST0080	
		Document type	Document status
		Title: ITR1_rb2_linkage_asm	DWG No.
			Rev. / Date of issue / Sheet 6/25

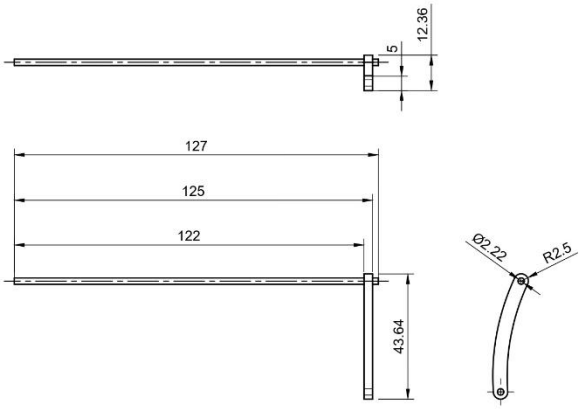

Dept	Technical reference	Created by	Approved by
		Yaswanth Uppalapu 25BST0080	
		Document type	Document status
		Title: ITR1_rb2_linkage_asm	DWG No.
			Rev. / Date of issue / Sheet 5/25

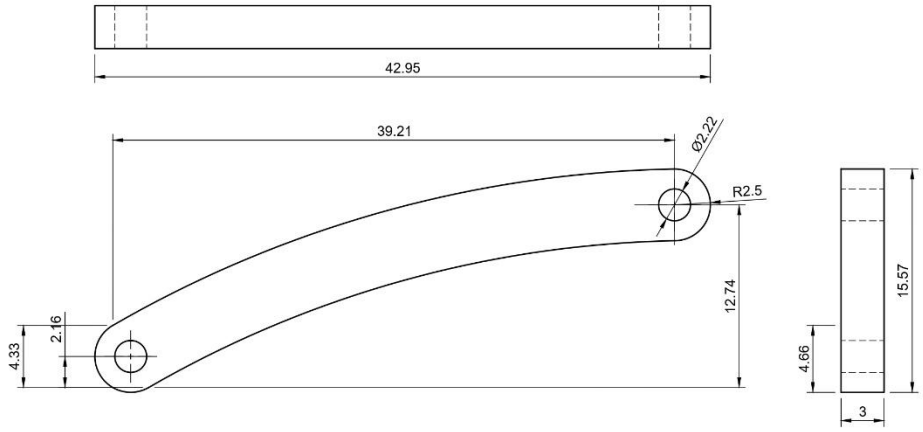

Dept	Technical reference	Created by	Approved by
		Yaswanth Uppalapu 25BST0080	
		Document type	Document status
		Title: ITR1_rb2_linkage_asm	DWG No.
			Rev. / Date of issue / Sheet 4/25

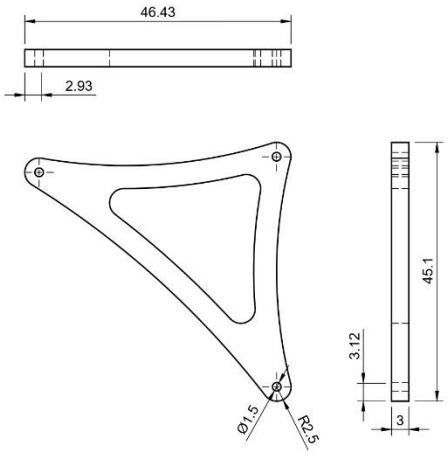

Dept	Technical reference	Created by	Approved by
		Yaswanth Uppalapu 25BST0080	
		Document type	Document status
		Title: ITR1_rb2_linkage_asm	DWG No.
			Rev. / Date of issue / Sheet 3/25

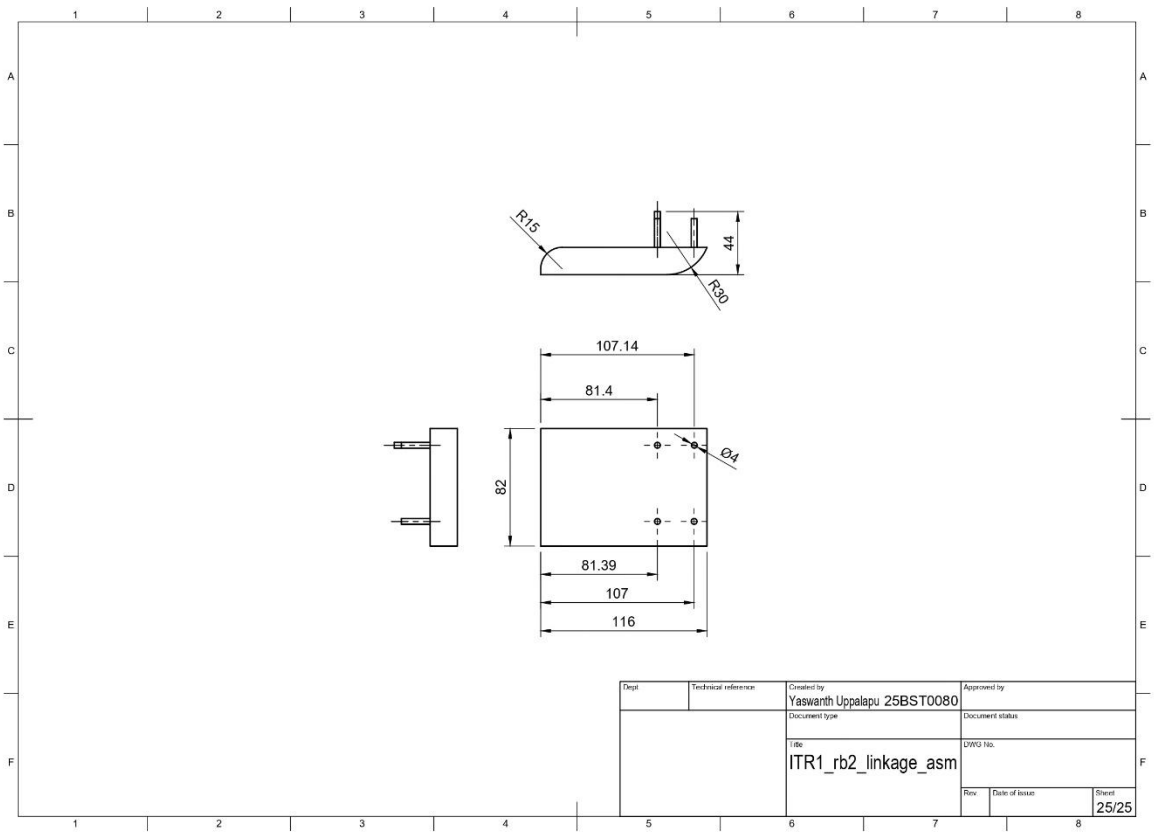

All the CAD files can be accessed in my githubrepo

https://github.com/Yaswanth-U/BAENG205_ALL-terrain-vehicle.git

References

- Images: https://en.wikipedia.org/wiki/File:Jansen%27s_Linkage.svg
- Theory: https://en.wikipedia.org/wiki/Jansen%27s_linkage
- Numcrical Modelling in robotics(Book): https://www.google.co.in/books/edition/Numerical_Modelling_in_Robotics/pBKqCgAAQBAJ?hl=en&gbpv=0
- Veratasium(Youtube)https://youtu.be/IFaAjR_RRJs?si=nxPigA4ZaTYqknHQ
- Theo Jensen's Youtube channel : https://youtube.com/@strandbeestfilm?si=xfR_8tnyUjcQkIs7