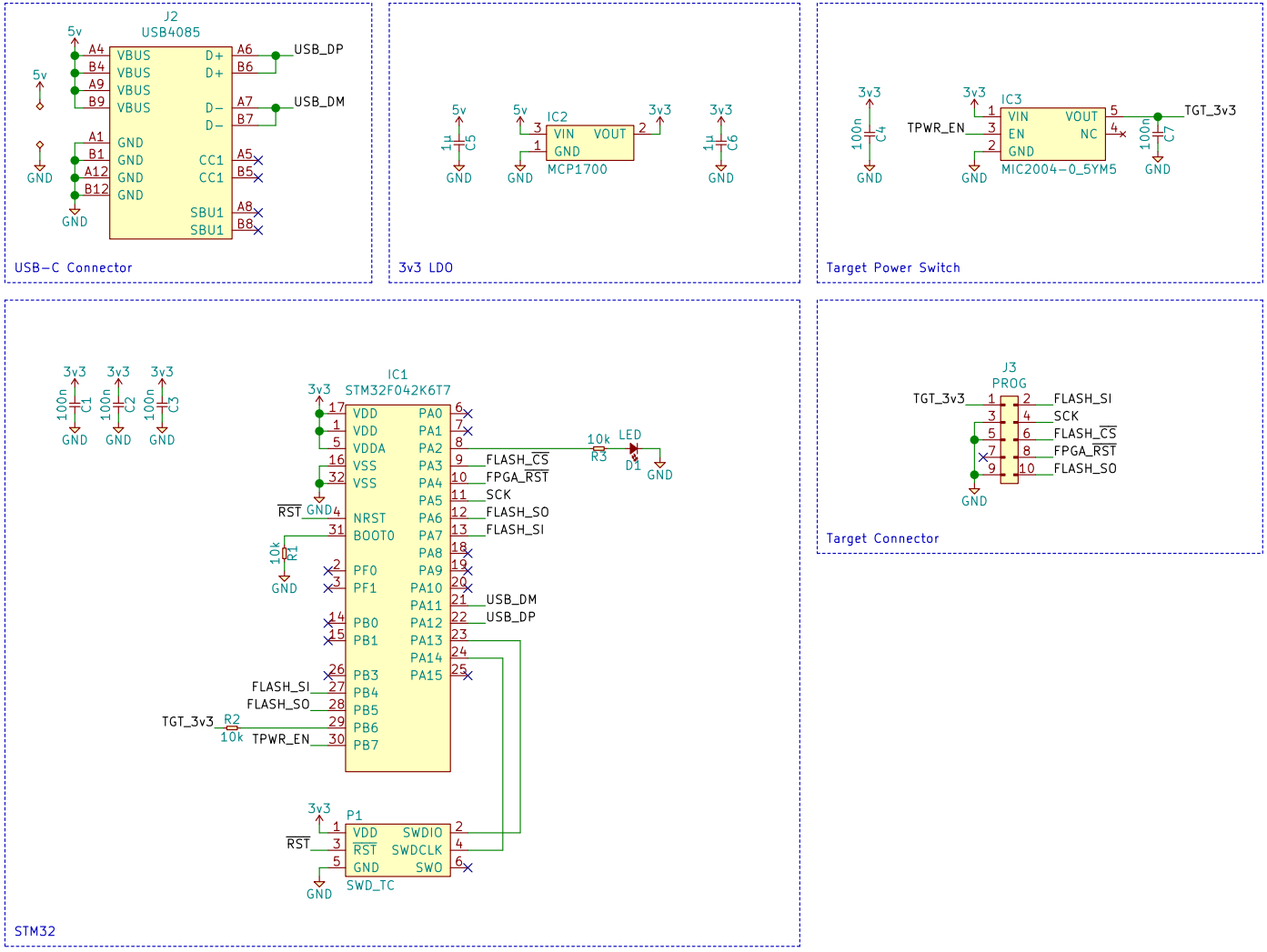

Licensed under Creative Commons Attribution 4.0
Copyright 2019 Adam Greig

Sheet: /
File: ffp.sch

Title: FFP FPGA/Flash Programmer

Size: A4	Date: 2019-04-30	**Rev: 1**
KiCad E.D.A. kicad 5.1.2-f72e74a84ubuntu18.04.1		Id: 1/1