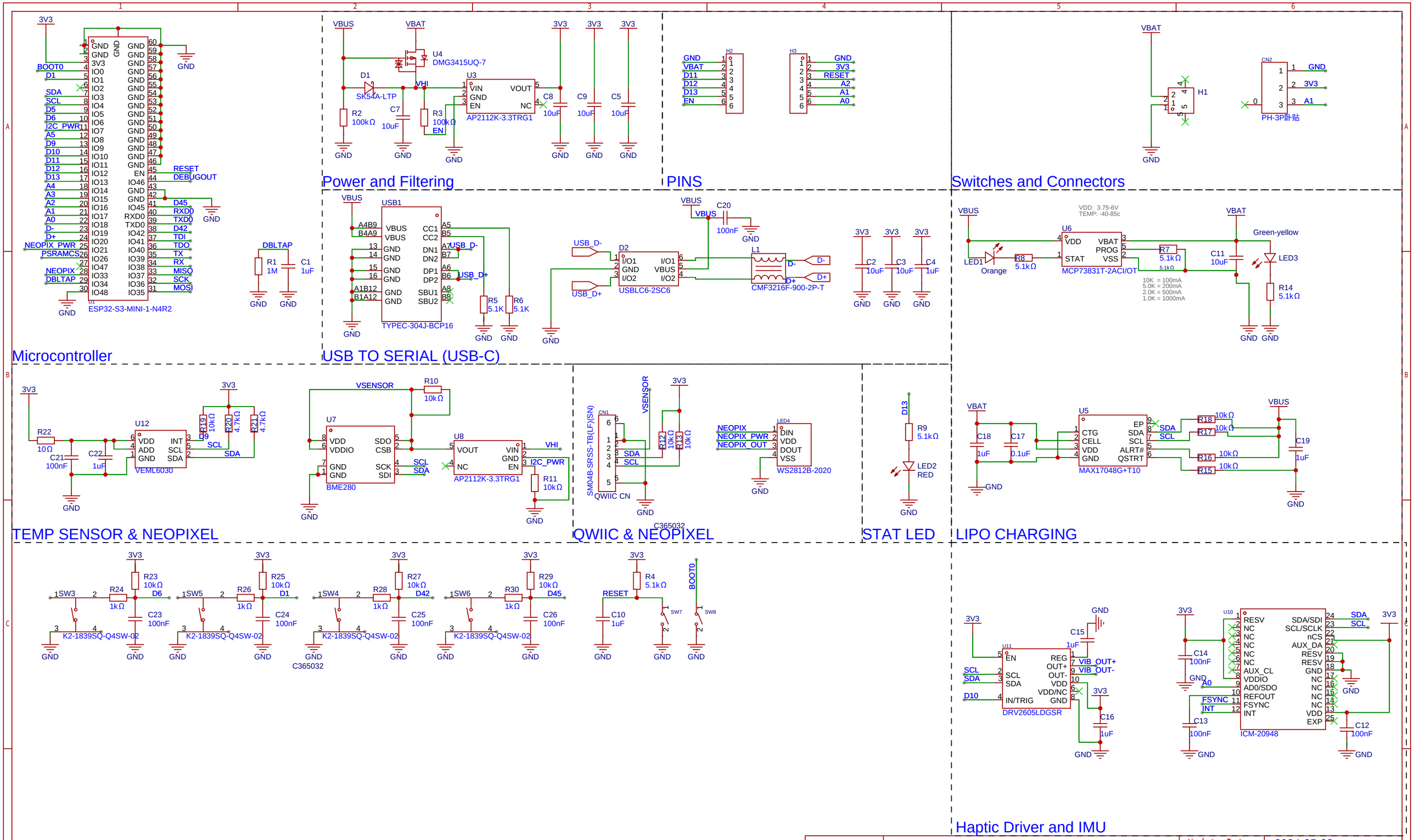

Schematic	SchematicV1.0	Update Date	2024-05-08
		Create Date	2024-03-19
Page	P1	Part Number	JLCPCB-002
Drawed	YAZAN SALEH	Incomplete Systems Prototype V0.1	
Reviewed	-		
		VER	SIZE
		V1.0	A4

PAGE 1 OF 1

EasyEDA

C327798