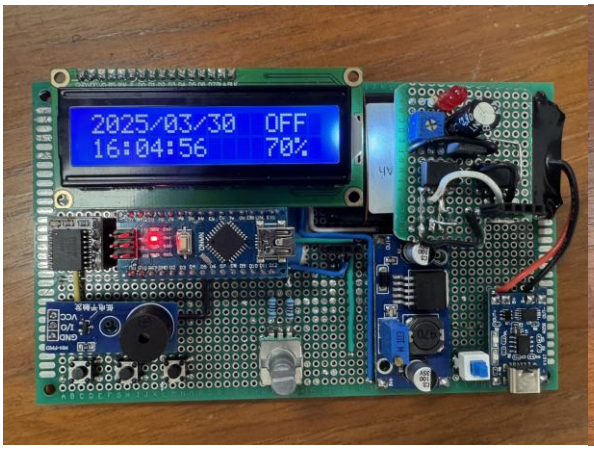
2025/03/30 OFF
16:04:56 70%

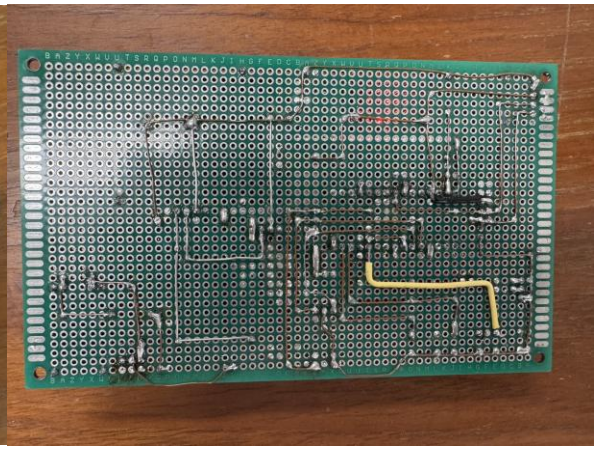

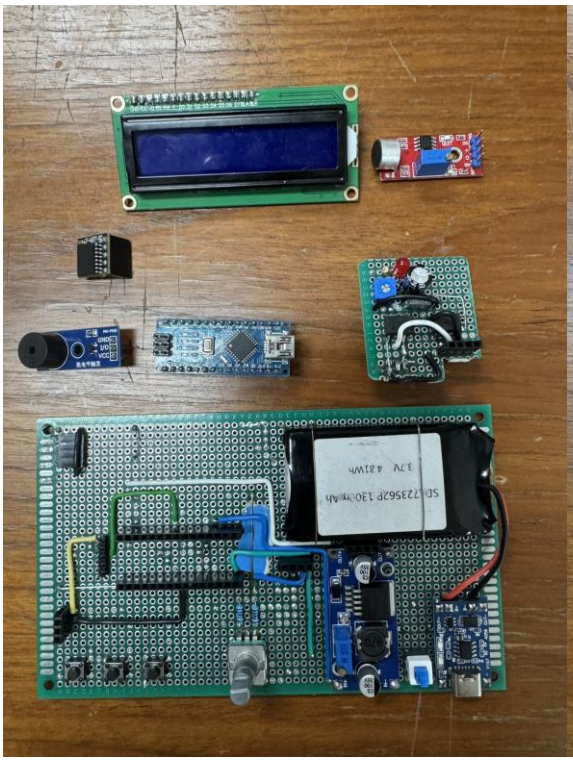

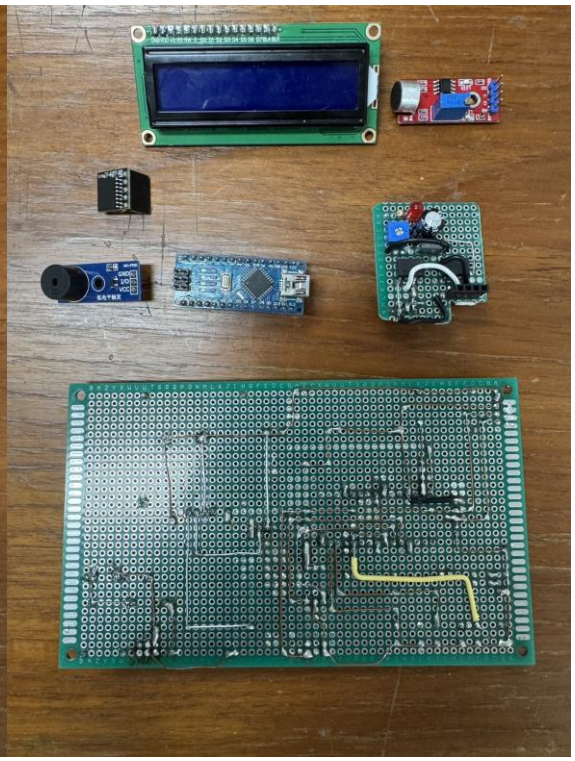

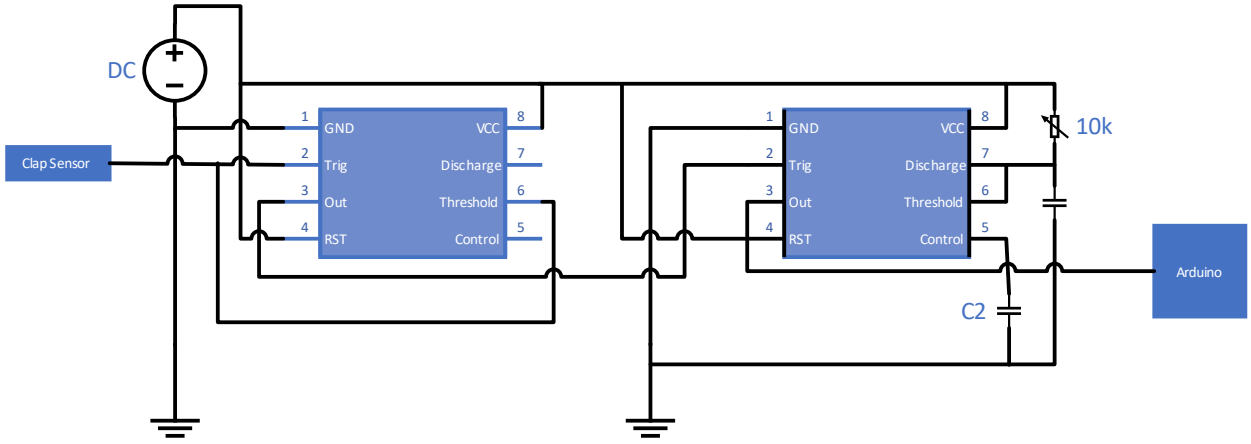
DC
Clap Sensor
1 GND
2 Trig
3 Out
4 RST
8 VCC
7 Discharge
6 Threshold
5 Control
1 GND
2 Trig
3 Out
4 RST
8 VCC
7 Discharge
6 Threshold
5 Control
10k
C2
Arduino

555 Timer as a Buffer

The **555 timer as a buffer** is used to isolate and drive loads without affecting the input signal. When configured in this mode, the **output follows the input** but with **higher current drive capability**, allowing it to interface with other circuits that require more power. The 555 timer in buffer mode can be set up in an **inverting** or **non-inverting** configuration using its internal transistors. This is useful for signal conditioning, especially when dealing with weak signals that need to drive LEDs, relays, or other components. In this case, the 555 timer is configured as inverting buffer to invert output signal from microphone sensor.

555 Timer in Monostable Mode

The **555 monostable mode** (one-shot mode) is used to generate a **single pulse of a fixed duration** in response to a trigger signal. When a negative pulse is applied to the trigger pin (Pin 2), the output **goes high** for a time period determined by an external resistor (R) and capacitor (C), given by the formula:

$$T=1.1\times R\times C$$

After the time period expires, the output **returns to low**, waiting for the next trigger. This mode is useful in **pulse generation, timers, debouncing switches, and delay circuits.**