LTspice - [proj.asc]

File Edit Hierarchy View Simulate Tools Window Help

```
.SUBCKT irfz44n 1 2 3
****************************************
*     Model Generated by MODPEX     *
*Copyright(c) Symmetry Design Systems*
*       All Rights Reserved         *
*   UNPUBLISHED LICENSED SOFTWARE   *
*   Contains Proprietary Information *
*     Which is The Property of      *
*     SYMMETRY OR ITS LICENSORS     *
*Commercial Use or Resale Restricted *
*   by Symmetry License Agreement   *
****************************************
* Model generated on Apr 24, 96
* Model format: SPICE3
* Symmetry POWER MOS Model (Version 1.0)
* External Node Designations
* Node 1 -> Drain
* Node 2 -> Gate
* Node 3 -> Source
M1 9 7 8 8 MM L=100u W=100u
* Default values used in MM:
* The voltage-dependent capacitances are
* not included. Other default values are:
*   RS=0 RD=0 LD=0 CBD=0 CBS=0 CGBO=0
.MODEL MM NMOS LEVEL=1 IS=1e-32
+VTO=3.56214 LAMBDA=0 KP=39.3974
+CGSO=1.25255e-05 CGDO=2.2826e-07
RS 8 3 0.0133305
D1 3 1 MD
.MODEL MD D IS=9.64635e-13 RS=0.00967689 N=1.01377 BV=55
+IBV=0.00025 EG=1.08658 XTI=2.9994 TT=1e-07
+CJO=1.39353e-09 VJ=0.5 M=0.42532 FC=0.5
RDS 3 1 2.2e+06
RD 9 1 0.0001
RG 2 7 2.20235
D2 4 5 MD1
* Default values used in MD1:
*   RS=0 EG=1.11 XTI=3.0 TT=0
*   BV=infinite IBV=1mA
.MODEL MD1 D IS=1e-32 N=50
+CJO=1.52875e-09 VJ=0.5 M=0.584414 FC=1e-08
D3 0 5 MD2
* Default values used in MD2:
*   EG=1.11 XTI=3.0 TT=0 CJO=0
*   BV=infinite IBV=1mA
.MODEL MD2 D IS=1e-10 N=0.408752 RS=3e-06
RL 5 10 1
FI2 7 9 VFI2 -1
VFI2 4 0 0
EV16 10 0 9 7 1
CAP 11 10 2.06741e-09
FI1 7 9 VFI1 -1
VFI1 11 6 0
RCAP 6 10 1
D4 0 6 MD3
* Default values used in MD3:
*   EG=1.11 XTI=3.0 TT=0 CJO=0
*   RS=0 BV=infinite IBV=1mA
.MODEL MD3 D IS=1e-10 N=0.408752
.ENDS
.tran 0 30m 25m 1e-7
```

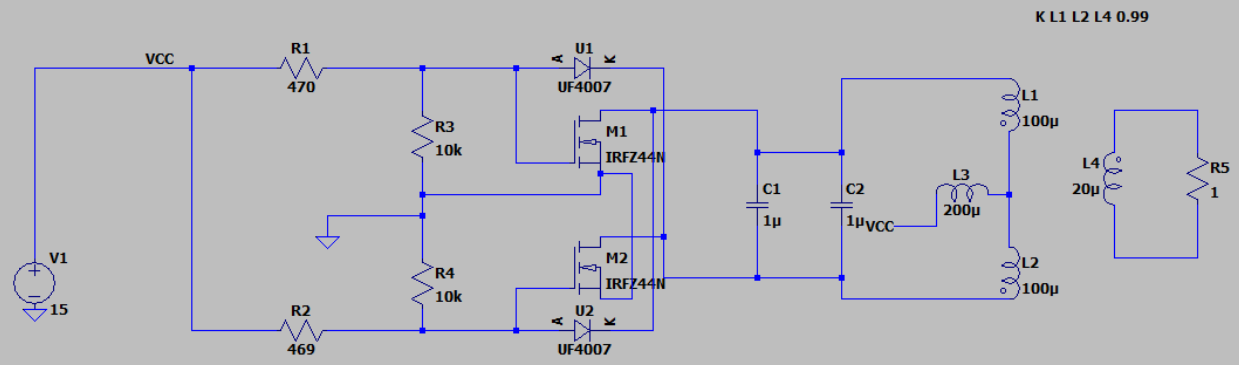

LTspice - proj.asc

File Edit Hierarchy View Simulate Tools Window Help

proj.asc proj.raw

proj.raw

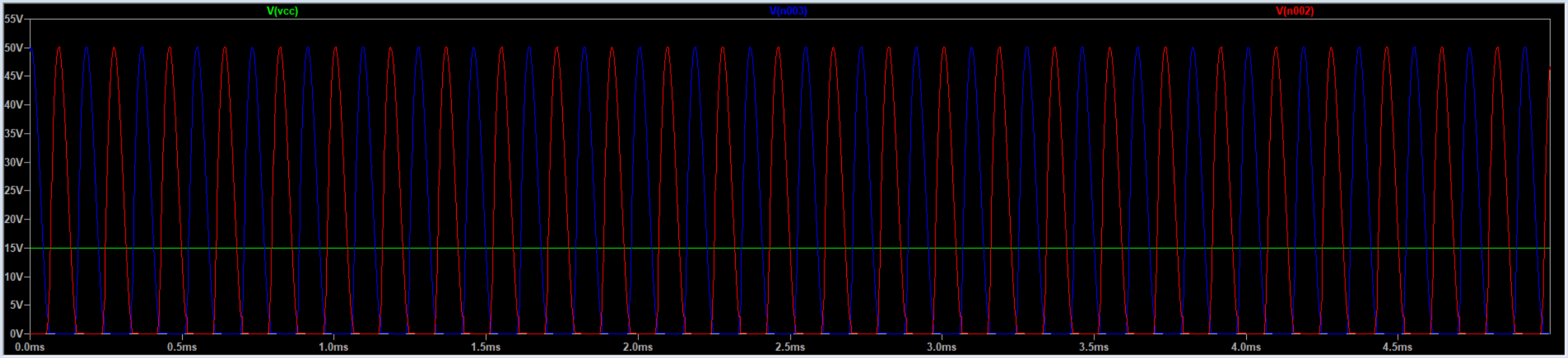

proj.asc

```
*******************
Apr 24, 96

S Model (Version 1.0)
ations

W=100u
n MM:
nt capacitances are
efault values are:
BD=0 CBS=0 CGBO=0
L=1 IS=1e-32
A=0 KP=39.3974
GDO=2.2826e-07

35e-13 RS=0.00967689 N=1.01377 BV=55
3658 XTI=2.9994 TT=1e-07
=0.5 M=0.42532 FC=0.5

n MD1:
```

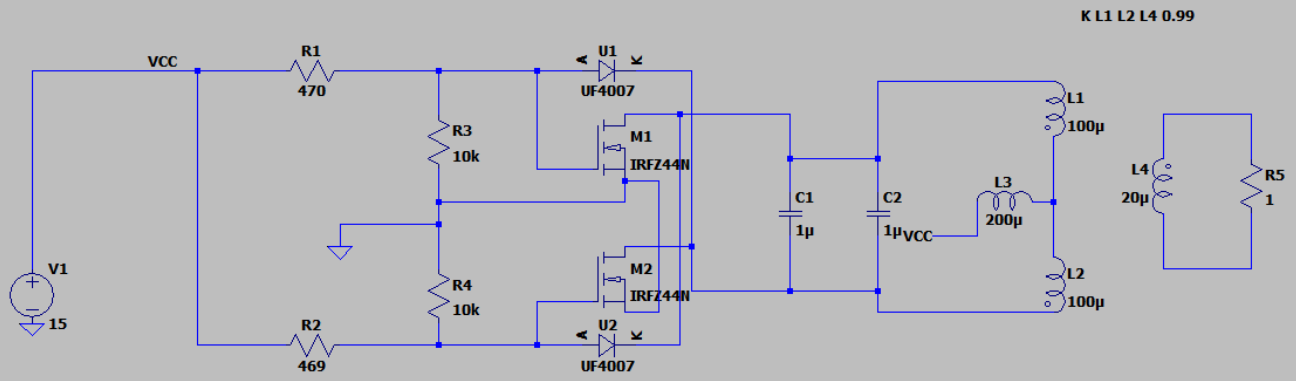

Right click to edit "**********"

LTspice - proj.asc

File Edit Hierarchy View Simulate Tools Window Help

proj.asc proj.raw

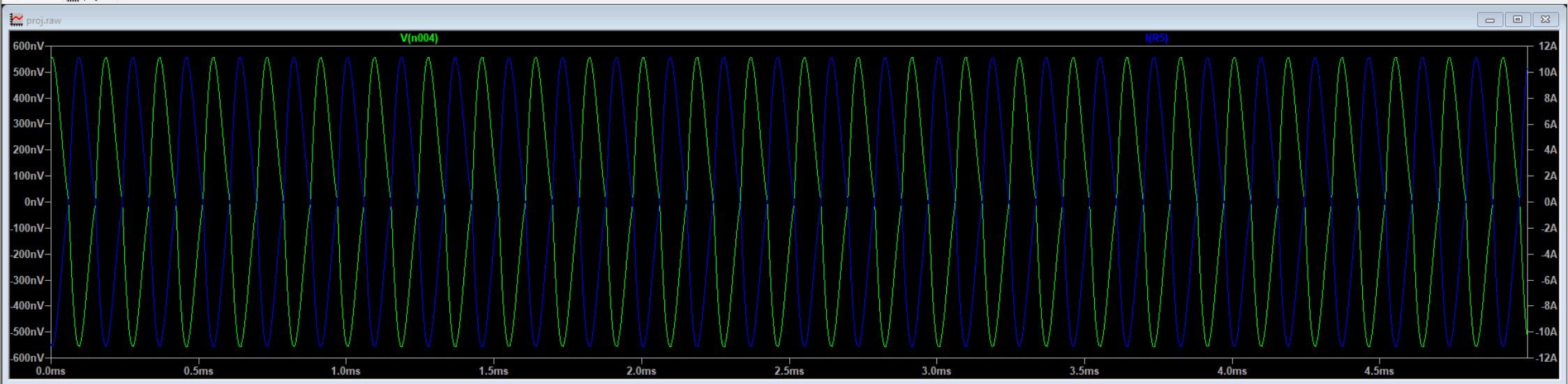

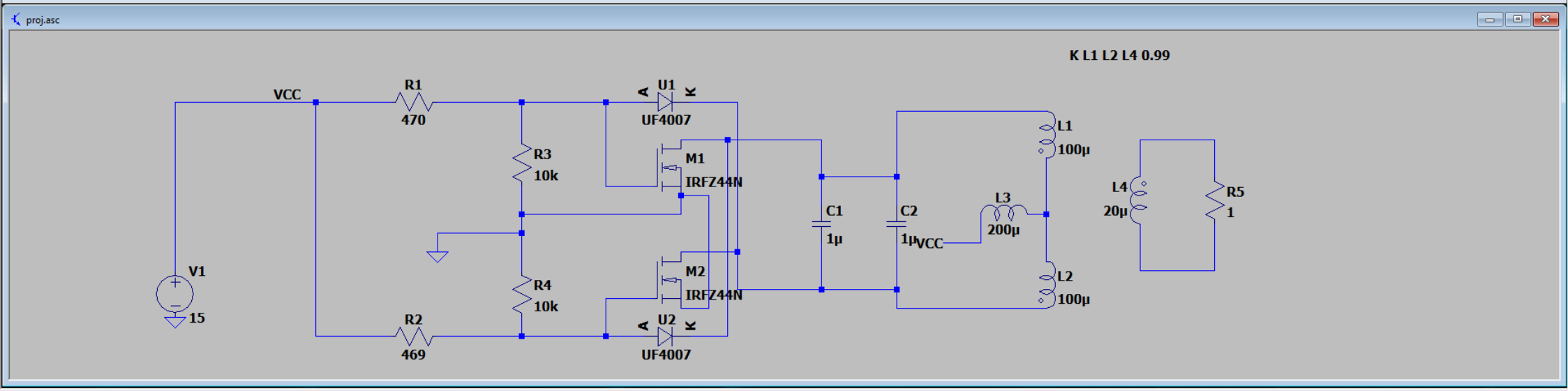

x = 1.785ms y = 574.87nV, 11.50A