ESP32 S3 WROOM 1U N16R8

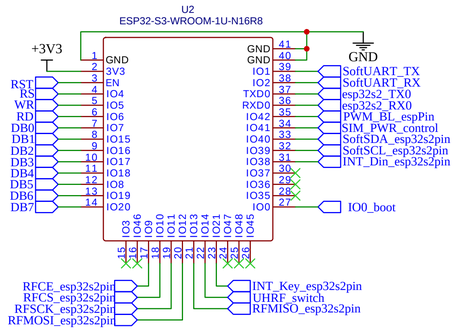

ESP32 boot and rst circuit

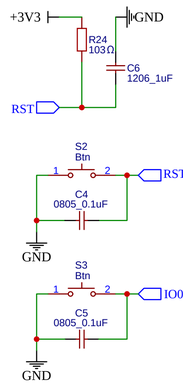

ESP32 auto prog circuit

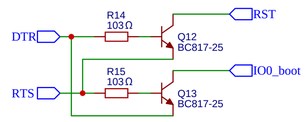

ILI9488 LCD 8bit parallel circuit

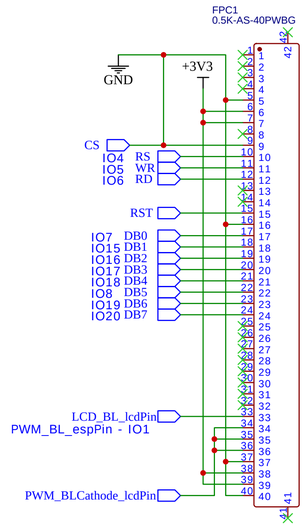

ILI9488 LCD backlight

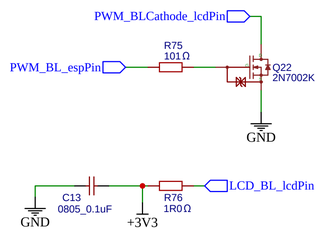

PLC 24v to 4.4+3.3v step down converters

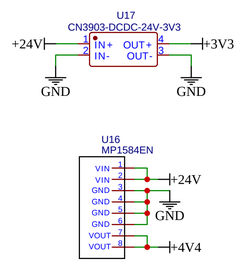

Jack IO mapping

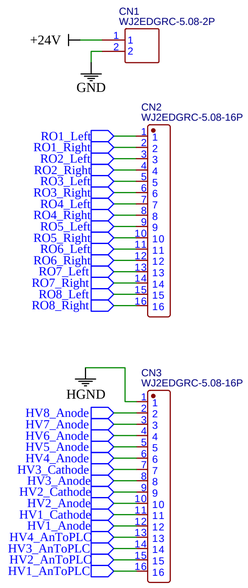

High voltage in, ch 7..8

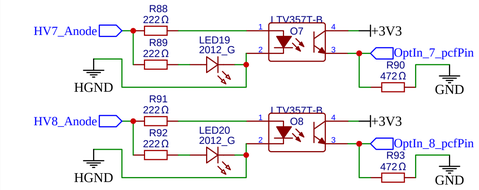

SIM808 Module + GPS and GSM ant

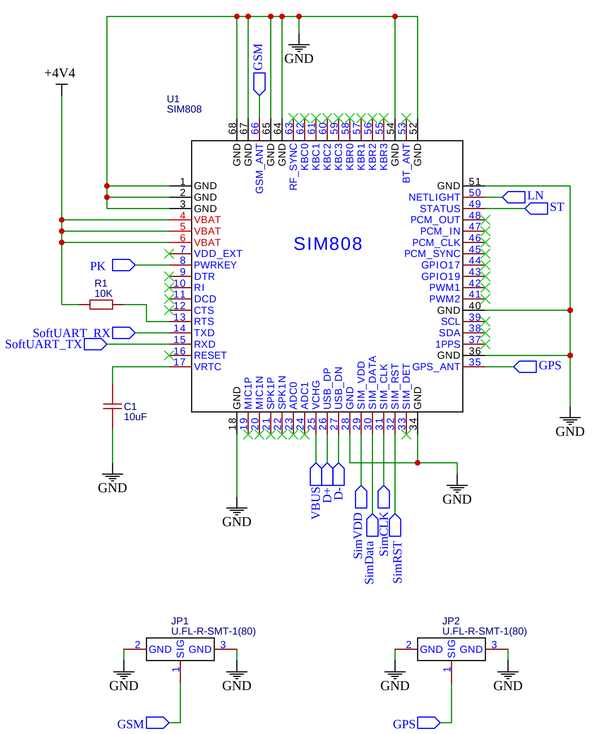

SIM808 Module state LEDs indicators + microusb bus

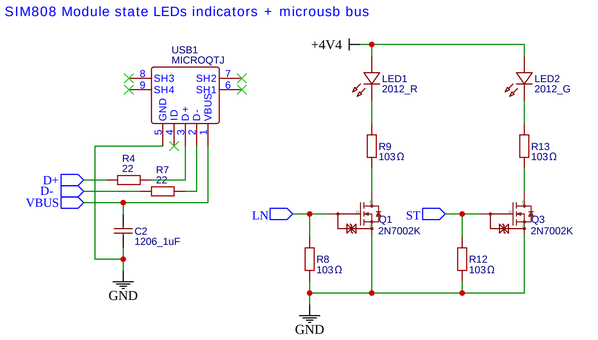

SIM808 Module SIM-card holder

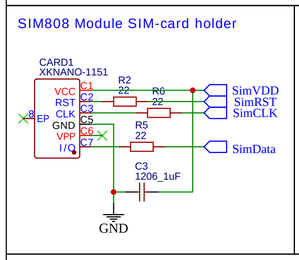

SIM808 Module PWR On/Off control

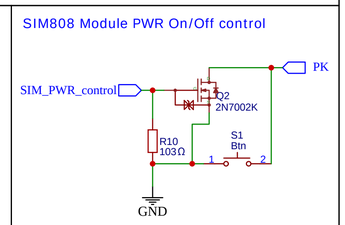

UHF RF 18000C Scanner interface

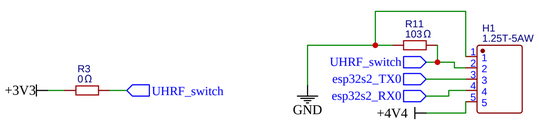

Relay ch 1..8 control

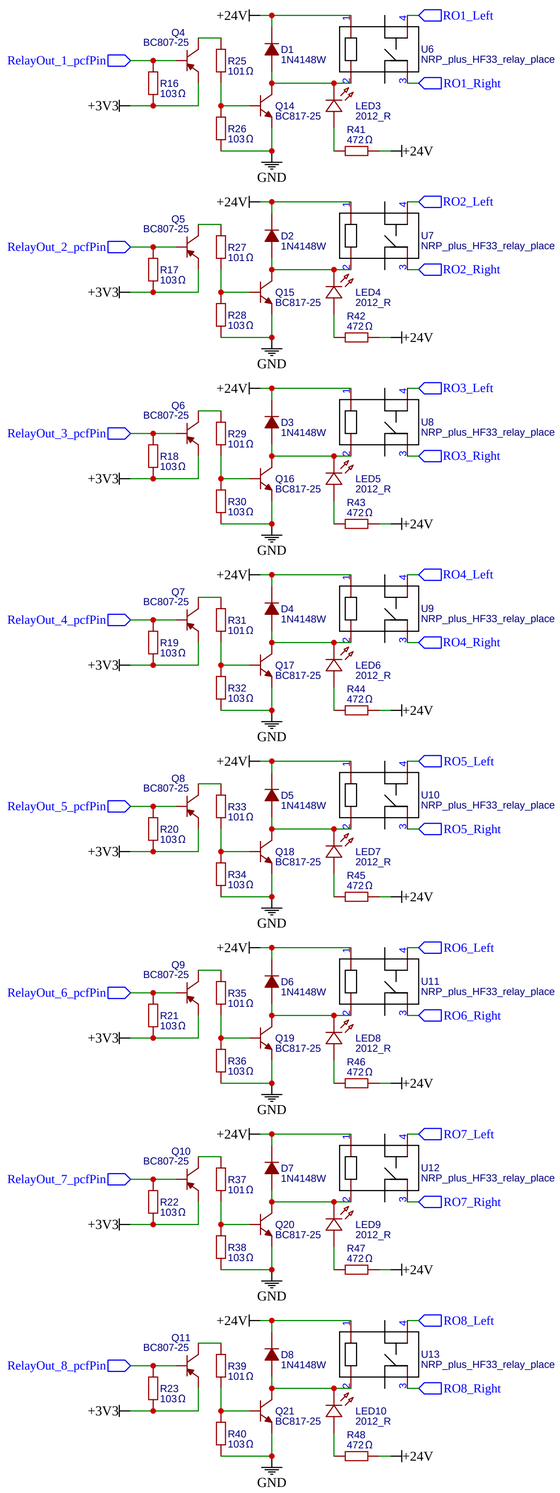

High voltage in, ch 1..6

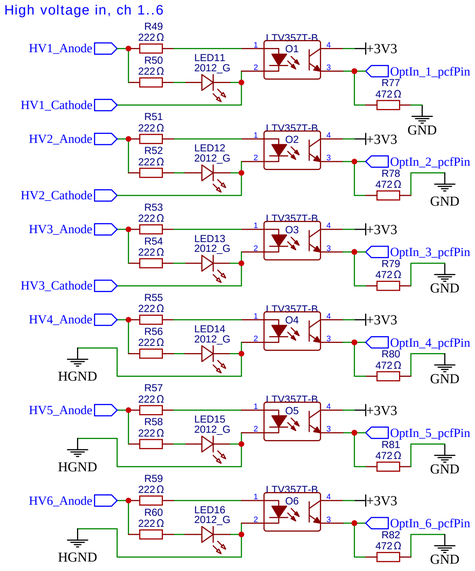

2 more ch in "High voltage in, ch 7..8"

Analog in (2x 0-24V + 2x 4ma-20ma 24V), ch 1..4

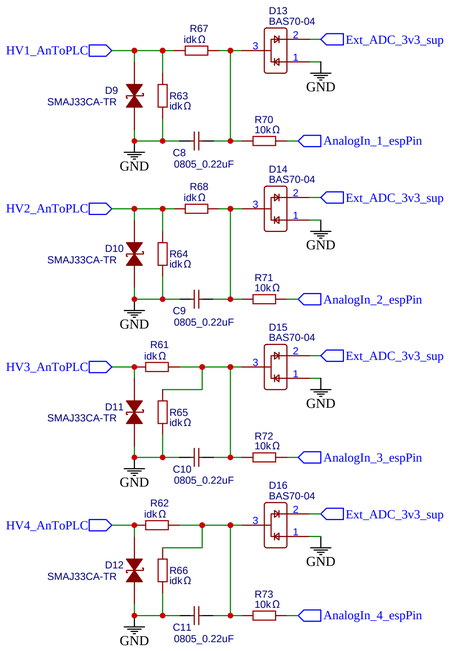

Analog in def circuit

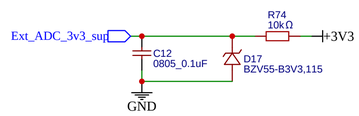

RF (spi) - JDY40

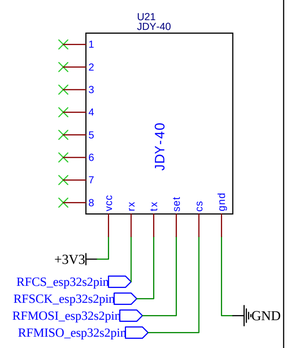

RF (spi) - NRF24

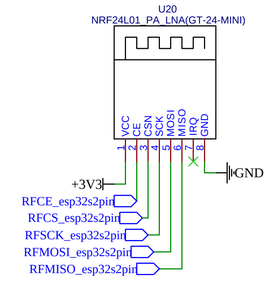

Onboard jumpers for future shields + debug

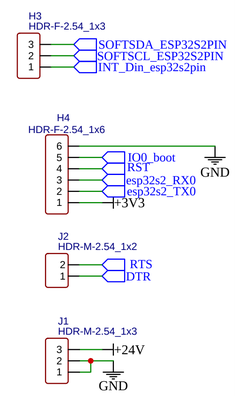

RTC + 24Cxx EEPROM

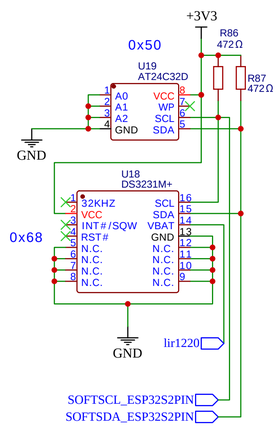

I/O PCF expander

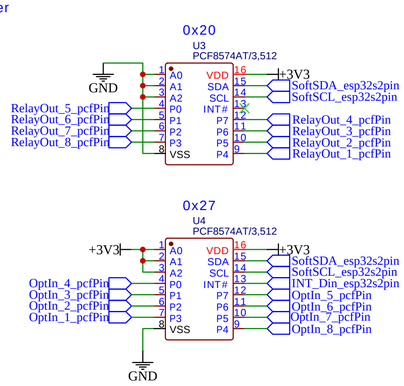

Keyboard panel throught PCF expander

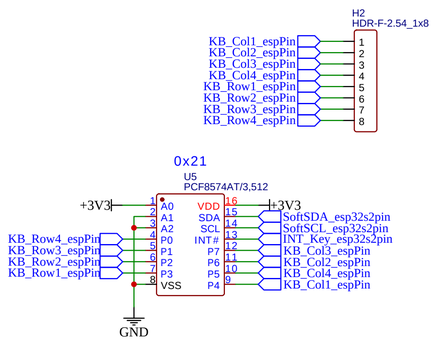

Analog input ADS1015 expander

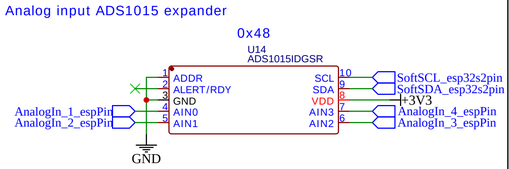

Li ion batt chargering (lir1220 in my case)

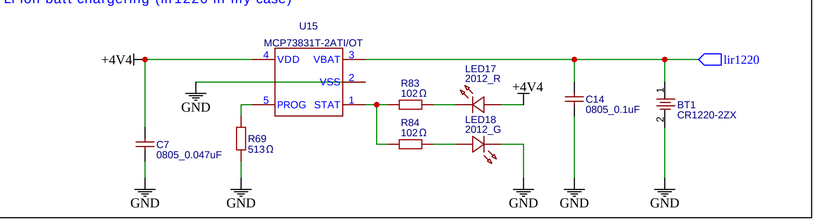

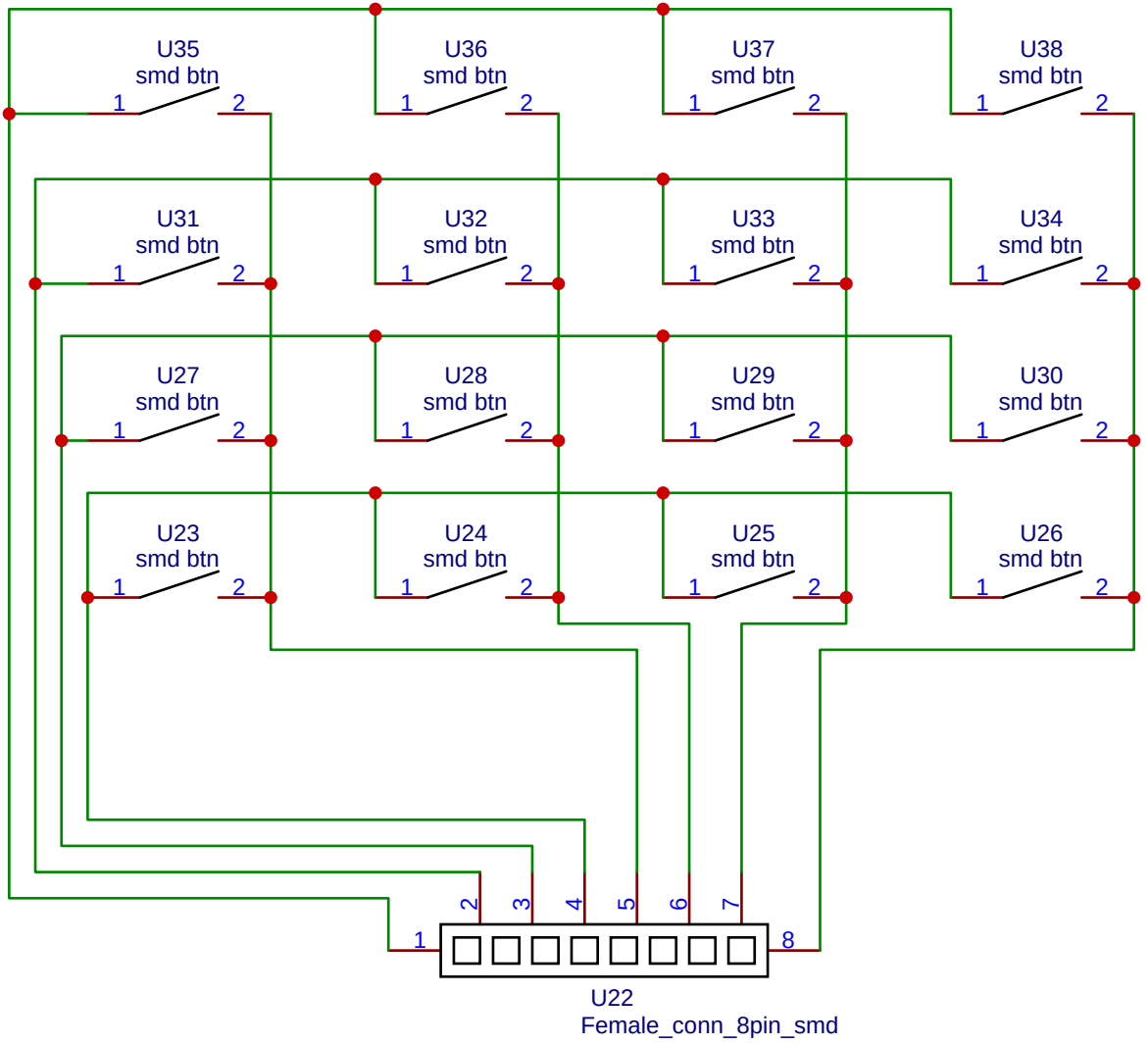
U35
smd btn
U36
smd btn
U37
smd btn
U38
smd btn
U31
smd btn
U32
smd btn
U33
smd btn
U34
smd btn
U27
smd btn
U28
smd btn
U29
smd btn
U30
smd btn
U23
smd btn
U24
smd btn
U25
smd btn
U26
smd btn
1
2
3
4
5
6
7
8
U22
Female_conn_8pin_smd