Answer sheet

Types of electric circuits

1. Examine the following circuit diagram showing two resistors connected to a battery. Use the diagram to answer the questions that follow.

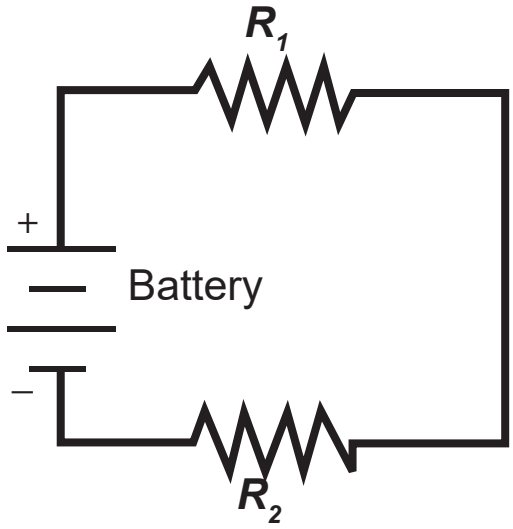

Schematic of series circuit with 2 resistors and a battery

a) Describe the path of the current and use the result to explain whether the resistors are connected in series or in parallel.

Solution:

The current leaves the positive terminal of the battery and passes through R_1. It then passes through R_2 and arrives back at the negative terminal of the battery. Since there is only one possible path for the current to take, the resistors are connected in series.

b) Describe what will happen to the current if either resistor is removed, leaving a gap.

Solution:

If either resistor is removed, the current will drop to zero since there is only one path for the current to take.

Copyright © 2021 The Ontario Educational Communications Authority. All rights reserved.

2. Examine the following circuit diagram showing two resistors connected to a battery. Use the diagram to answer the questions that follow.

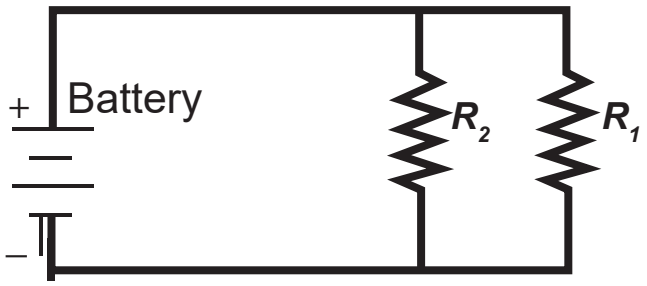

Schematic of parallel circuit with 2 resistors and a battery

a) Describe the path of the current and use the result to explain whether the resistors are connected in series or in parallel.

Solution

The current leaves the positive terminal of the battery and splits into two parts, with some passing through R_1 and the rest passing through R_2. The currents come back together and pass into the negative terminal of the battery. Since there are two possible paths for the current to take, the resistors are connected in parallel.

b) Describe what will happen to the current if either resistor is removed, leaving a gap.

Solution:

If either resistor is removed, the current through that path will drop to zero and the total current will flow through the other path.

Copyright © 2021 The Ontario Educational Communications Authority. All rights reserved.