Circuit Analysis

Now solve these circuits on your own.

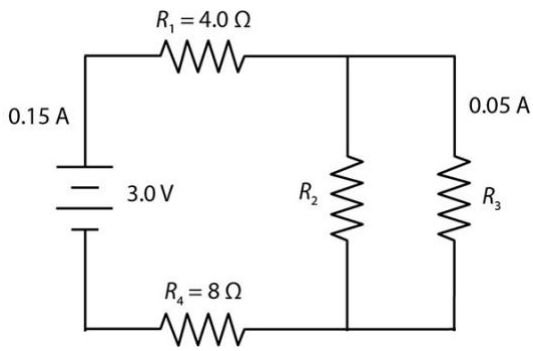

- Step 1

You can find the current in R_1 and R_4 because they are in series with the battery, so $I_T=I_1=I_4= 0.15$ A.

- Step 2

You can find the electric potential difference across R_1 and R_4 with Ohm's Law because you know the I and R values for each. $V_1=I_1R_1= (0.15A)(4.0\ \Omega) = 0.60V$ and $V_4= I_4R_4= (0.15A)(8.0\ \Omega)= 1.2$ V

- Step 3

Find the electric potential difference across R_2 by looking at the loop that contains the battery, R_1, R_2, and R_4. Remember $V_{battery} = V_1+ V_2 + V_4$ for this loop. So $V_2=V_{battery}-V_1-V_4= 3.0$ V - 0.60 V - 1.2 V = 1.2 V.

- Step 4

The electric potential difference across in R_2 and R_3 will be equal because they are in parallel, $V_3=V_2= 1.2$ V.

- Step 5

Find the current in R_2 by looking at the junction at R_1 and R_2. 0.15 A flows in from R_1, 0.050 A flows through R_3 so you can figure out how much is left to flow through R_2. $R_1= R_2+R_3$ (Kirchhoff's current law), so $R_2= R_1-R_3= 0.15$ A - 0.050 A=

Copyright © 2021 The Ontario Educational Communications Authority. All rights reserved.

0.10 A.

- Step 6

Find the remaining resistances by using Ohm's Law, V=IR.

	Current (A)	Electric potential (V)	Resistance (Ω)
Battery	0.15 A	3.0 V	$2.0 \times 10^1 \Omega$
R_1	0.15 A	0.60 V	4.0 Ω
R_2	0.10 A	1.2 V	12 Ω
R_3	0.050 A	1.2 V	24 Ω
R_4	0.15 A	1.2 V	8.0 Ω

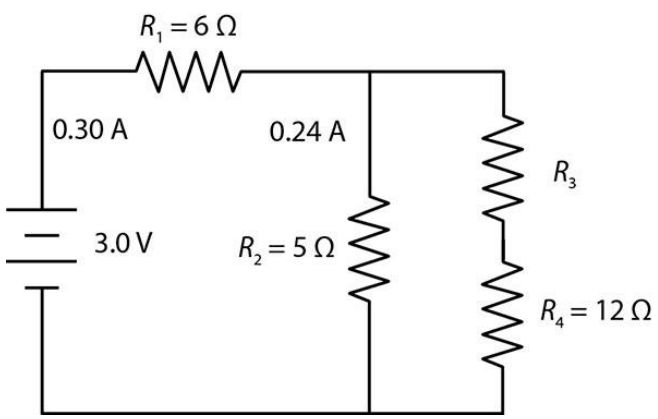

- Step 1

You can find the current in R_1 because it is in series with the battery, so I_1 = 0.3 A.

- Step 2

You can find the electric potential difference across R_1 and R_2 using Ohm's Law because you know the I and R. So $V_1=I_1R_1$= (0.30 A)(6.0 Ω)= 1.8 V and $V_2=I_2R_2$ = (0.24 A)(5.0 Ω)=1.2 V

- Step 3

Copyright © 2021 The Ontario Educational Communications Authority. All rights reserved.

R_3 and R_4 have the same current because they are in series. Find the current through R_3 by looking at the junction between R_1 and R_2. 0.30 A flows in through R_1, 0.24 A flows through R_2 so you can figure out how much is left to flow through R_3. So $I_3=I_1-I_2=0.30$ A - 0.24 A=0.060 A. The same amount will flow through R_4, so $I_4=I_3=0.060$ A.

- Step 4

Use Ohm's Law to find the electric potential difference across R_4 since you have the current and resistance. So $V_4=I_4R_4=$ (0.060 A)(12 Ω) = 0.72 V.

- Step 5

Find the electric potential difference in R_3 by realizing R_2 is in parallel with R_3 and R_4. Since they are in parallel, $V_2 = V_3 + V_4$=0.48 V +0.72 V = 1.2 V.

- Step 6

Find the resistance through the battery using Ohm's Law.
$R_3=V_3/I_3$=(0.48V)/(0.060A)= 8.0 Ω

Complete the following table:

	Current (A)	Electric potential (V)	Resistance (Ω)
Battery	0.30 A	3.0 V	10 Ω
R_1	0.30 A	1.8 V	6.0 Ω
R_2	0.24 A	1.2 V	5.0 Ω
R_3	0.060 A	0.48 V	8.0 Ω
R_4	0.060 A	0.72 V	12 Ω

Copyright © 2021 The Ontario Educational Communications Authority. All rights reserved.