Ch. 23 HW Electric Current

Show **ALL WORK**. You may be randomly selected to solve one of the problems next class which will count towards 20% of your final grade.

1) **(5 pts)** A simple electrical circuit consists of a resistor (6 Ω, ohms), connected to a 12-V battery. An ammeter is placed on the right wire to measure current flow at the specified point

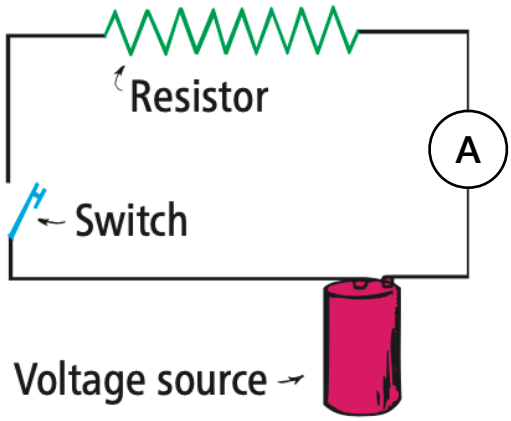

(a) **(1 pts)** what is he current flow through the circuit on an open switch

0 A, no current flows

(b) **(3 pts)** if the switch is closed, will current flow ? if so, calculate (i) the current that flows through the circuit and (ii) calculate the power consumed by the battery

Yes, current will flow.

(i) I = 2 A

(ii) P = 24 W

(c) **(1 pts)** calculate the current flow if the resistance is *doubled*

I = 1 A

2) **(20 pts)** An electrical circuit consists of two resistors of resistance $R_1 = 2\ \Omega$ and $R_2 = 4\ \Omega$ connected in *series* to a 12-V battery.

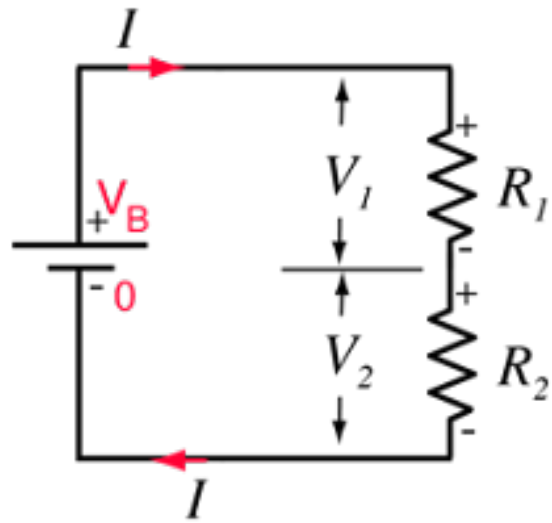

(a) **(5 pts)** calculate the equivalent resistance, R_{eq}

Req = 6 ohms

(b) **(5 pts)** calculate the total current I across the electrical circuit

I = V / Req = 12/6 = 2 A

(c) **(5 pts)** calculate the voltage drop V_1 across the first resistor; the voltage drop V_2 across the second resistor and verify that the total voltage drop $(V_1 + V_2)$ is 12 Volts.

V1 = 4 Volts

V2 = 8 Volts

(d) **(5 pts)** calculate the power dissipated by each resistor

P1 = 8 W

P2 = 16 W

3) **(20 pts)** An electrical circuit consists of two resistors of resistance $R_1 = 2\ \Omega$ and $R_2 = 4\ \Omega$ connected in *parallel* to a 12-V battery.

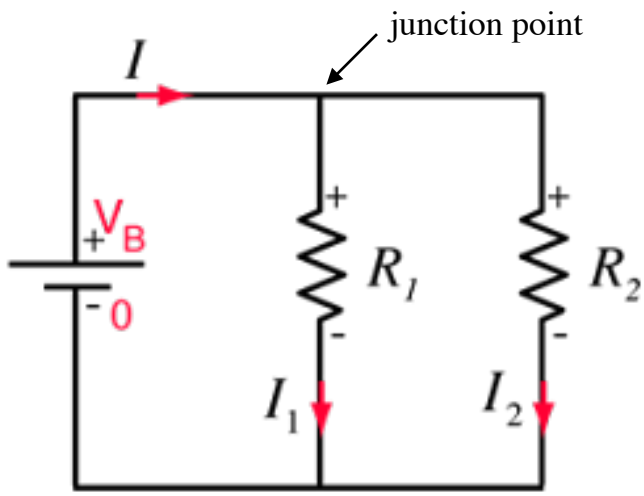

(a) **(5 pts)** calculate the equivalent resistance, R_{eq}

Req = 1.3 ohms

(b) **(5 pts)** what is the voltage drop across each resistor ?

V = 12 Volts

(c) **(5 pts)** calculate the currents I_1 and I_2 across each resistor (*hint*: apply Ohm's law independently across each resistor to determine the corresponding current)

I1 = 6 A

I2 = 3 A

(d) **(5 pts)** calculate the power dissipated across each resistor

P1 = 72 W

P2 = 36 W

4) **(10 pts)** The rate at which electric energy is converted into another form (e.g., mechanical energy, heat, light) is **electric power** ($P = IV$), where power (unit: watts (W) or energy per unit time, J/s). For practical matter, the power company charges its users for energy consumption, in units of kWh (kilowatt-hour), where 1 kWh is the amount of energy transferred in 1 hour at a rate of 1 kW. (*hint*: study checkpoint example in section 23.7 of textbook)

(a) **(5 pts)** If the electric company charges 10 cents / kWh, this means that a 1 kW device operated for 1 hour will cost the user 10 cents. What would be the cost to operate a 1200-W hair dryer for 2 hours ?

(10 c / kWh) x (1.2 kW) x 2 hrs = 24 c

(b) **(5 pts)** If the electric company charges 15 cents / kWh, then a 1000-W iron, for example, can operate for 1 hour at a cost of 15 cents. What would be the monthly cost for using the iron if it is operated for 1 hour each week of the month ?

(15 c / kWh) x (1 kW) x 4 hrs = 60 c