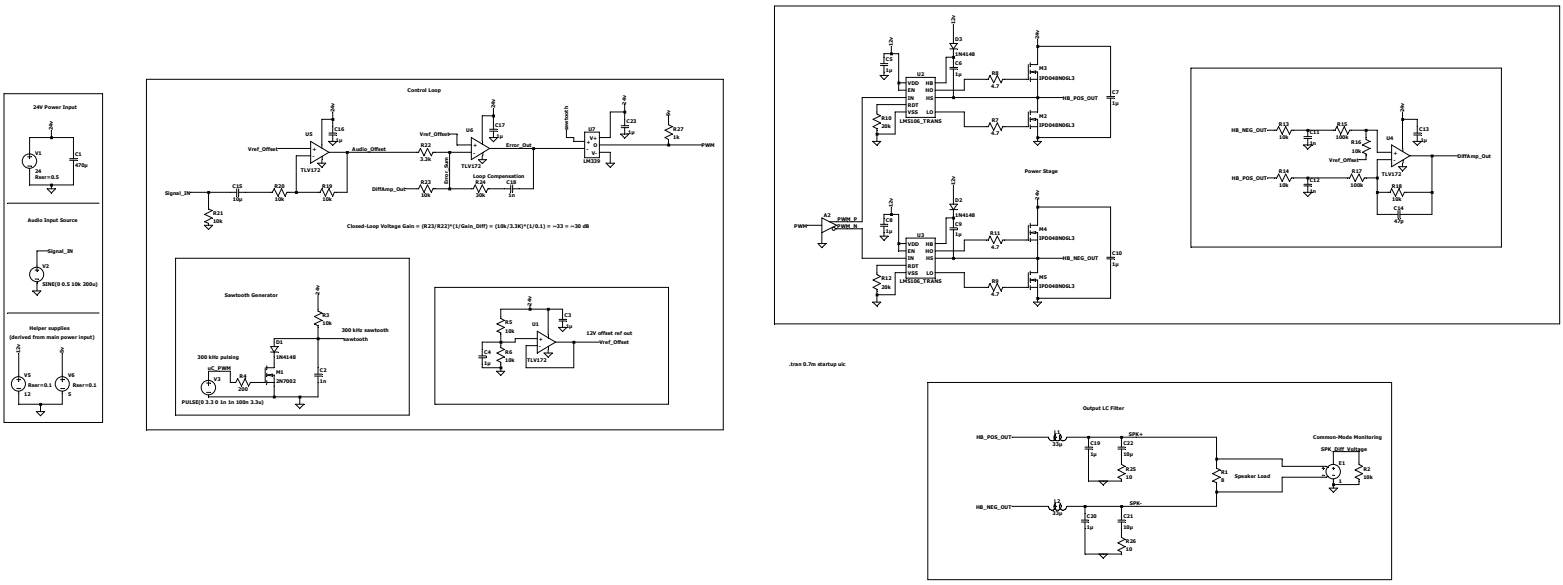

--- C:\Users\Markus\Desktop\ClassD_Trans.asc ---