RELIC:RESIDUAL FLOW MATCHING FOR LEARNED IMAGE COMPRESSION

Fangzhou Yi

Independent Researcher

ABSTRACT

Learned image compression has achieved remarkable progress, often surpassing traditional codecs in both efficiency and reconstruction quality. However, balancing structural fidelity (distortion) and visual realism (perception) remains a fundamental challenge. In this paper, we introduce ReLIC, a novel hybrid framework that leverages Flow Matching to explicitly reconstruct quantization residuals in latent space. By synthesizing the information lost during quantization, ReLIC enhances perceptual quality without sacrificing distortion metrics. Our method is model-agnostic and can be seamlessly integrated into existing LIC pipelines—with or without Latent Residual Prediction —as a plug-and-play module. Extensive experiments across multiple benchmarks demonstrate that ReLIC consistently improves both rate-distortion and perceptual metrics, validating its effectiveness and versatility.

Index Terms— Learned Image Compression, Image Processing, Flow Matching

1. INTRODUCTION

Image compression is a fundamental task in image processing. For decades, handcrafted codecs such as JPEG, H.265 [1], and H.266 [2] have formed the backbone of digital image compression across a wide range of applications. However, with the proliferation of high-resolution imaging technologies and the widespread use of social media, the volume of high-resolution visual content has grown dramatically. This shift imposes increasing demands on storage and bandwidth, exposing the limitations of traditional coding schemes—particularly their block-based structure, which often results in suboptimal compression efficiency and visible artifacts at low bit rates. These challenges underscore the need for new paradigms capable of addressing modern compression requirements more effectively.

Recent advances in machine learning have spurred a growing interest in replacing handcrafted codecs with learned compression methods based on generative models. Early approaches typically framed image compression as a Variational Autoencoder (VAE) optimization problem, training models under the rate-distortion (R-D) framework to balance compression rate and reconstruction fidelity [3, 4, 5, 6, 7]. More recently, the development of other generative architectures, such as Generative Adversarial Networks (GANs) [8], has enabled generative image compression methods that prioritize perceptual quality over distortion minimization, achieving impressive visual results at very low bit rates [9, 10].

VAE-based models typically excel in preserving structural integrity and perform well under distortion-oriented metrics such as PSNR and MSE. In contrast, generative models offer superior semantic and perceptual reconstructions, which are better captured by perceptual metrics such as FID [11] and LPIPS [12]. Motivated by these complementary strengths, we hypothesize that a hybrid architecture combining both model types can yield improvements across a broader range of evaluation criteria.

A central bottleneck in both traditional and learned codecs is quantization, an essential step in encoding that inherently introduces information loss. Previous efforts to mitigate this issue, such as Latent Residual Prediction (LRP) [6], attempt to estimate and correct quantization errors. However, such techniques may suffer from training instability and typically offer only marginal gains in perceptual quality, especially under low-bit-rate constraints.

In this paper, we propose ReLIC—a novel generative compression framework that explicitly models and compensates for quantization residuals. By training a generative network to synthesize the fine details lost during quantization, ReLIC enhances both structural fidelity and perceptual realism in the reconstructed image. Furthermore, to the best of our knowledge, this is the first work to incorporate Flow Matching(FM) into the learned image compression (LIC) framework, introducing a new direction for generative modeling in compression tasks.

2. PROPOSED METHOD

2.1. Preliminary

Pipeline. Figure 1 illustrates the general learned image compression pipeline. The nonlinear analysis transform $g_a(\cdot)$ extract the input image $\boldsymbol{x}$ into latent space $\boldsymbol{y}$. Furthermore, a hyper analysis transform $h_a(\cdot)$ maps $\boldsymbol{y}$ to

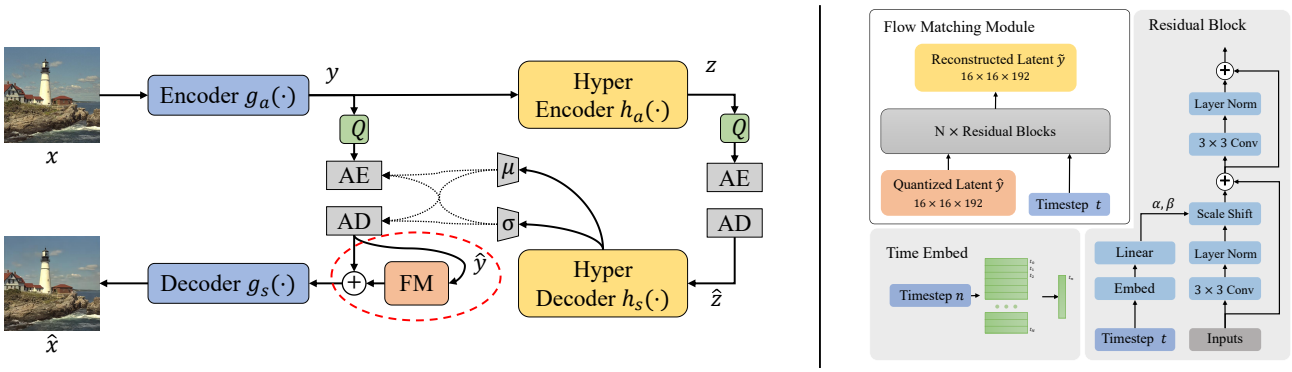

(a) (b)

Fig. 1: The proposed network structure with ReLIC module. (a) Overview of codecs scheme. Red dash circle is our ReLIC module. The position of the Flow Matching module within the entire workflow allows it to serve as a plug-and-play replacement even coexistence for the LRP module in other models.(b) Detailed flow matching network.

extract side information $\boldsymbol{z}$. For practical codecs, both $\boldsymbol{y}$ and $\boldsymbol{z}$ are quantized to $\hat{\boldsymbol{y}}$ and $\hat{\boldsymbol{z}}$. The quantized $\hat{\boldsymbol{z}}$ through a hyper synthesis transform $h_s(\cdot)$ is converted into Gaussian parameters $(\boldsymbol{\mu}, \boldsymbol{\sigma})$ for $\boldsymbol{y}$ entropy estimation with Gaussian distribution $\mathcal{N}(\boldsymbol{\mu}, \boldsymbol{\sigma})$. It is noteworthy that the quantization for $\boldsymbol{y}$ is calculated by $\hat{\boldsymbol{y}} = Q(\boldsymbol{y} - \boldsymbol{\mu}) + \boldsymbol{\mu}$, which is more accurate than direct quantization. As for $\boldsymbol{z}$, the entropy is built upon a standard Gaussian distribution $\mathcal{N}(0, 1)$:

$$\begin{aligned} &\boldsymbol{y} = g_a(\boldsymbol{x}), \hat{\boldsymbol{z}} = Q(h_a(\boldsymbol{y})), (\boldsymbol{\mu}, \boldsymbol{\sigma}) = h_s(\hat{\boldsymbol{z}}) \\ &\mathcal{R} = \mathbb{E}_{\boldsymbol{x} \sim p_{\boldsymbol{x}}}[-\log_2 p_{\hat{\boldsymbol{y}}}(\hat{\boldsymbol{y}})] + \mathbb{E}_{\boldsymbol{x} \sim p_{\boldsymbol{x}}}[-\log_2 p_{\hat{\boldsymbol{z}}}(\hat{\boldsymbol{z}})] \end{aligned} \tag{1}$$

Optimization Target. Quantized latent $\hat{\boldsymbol{y}}$ is applied to synthesis transform $g_s(\cdot)$ to reconstruct image $\hat{\boldsymbol{x}}$. Mean Square Error (MSE) $\mathcal{D}(\boldsymbol{x}, \hat{\boldsymbol{x}})$ is the most commonly used metric for measuring reconstruction quality. The entire network is optimized to achieve a trade-off between bitrate $\mathcal{R}$ and reconstruction loss $\mathcal{D}$:

$$\mathcal{L}_{RD} = \mathcal{R} + \lambda \cdot \mathcal{D}(\boldsymbol{x}, \hat{\boldsymbol{x}}) \tag{2}$$

where λ is the Lagrangian multiplier for multi-target optimization.

Flow Matching. Let $t \in [0, 1]$ be a continuous time variable. Consider a data distribution $q(x_1)$ (e.g., natural image latents), and a base distribution $q(x_0)$, typically a standard Gaussian $\mathcal{N}(0, I)$. The goal of Flow Matching is to learn a mapping that transforms samples from $x_0 \sim p$ to $x_1 \sim q$ over a continuous path.

To achieve this, we define a time-dependent flow $\phi_t(x)$, governed by the following ordinary differential equation (ODE):

$$\begin{aligned} \frac{d}{dt}\phi_t(x) &= v_t(\phi_t(x)) \\ \phi_0(x) &= x_0 \end{aligned} \tag{3}$$

Where $\phi_t(x)$ denotes intermediate point at time t along the trajectory from x_0 to x_1 and $v_t(\cdot)$ is a learnable velocity field parameterized by a neural network. Meanwhile, let $p_t(x)$ be the intermediate probability density at time t, forming a smooth path from $p_0 = p$ to $p_1 \approx q$.

If there exists a known (or estimable) reference vector field $u_t(x)$ that drives $p_t(x)$, the Flow Matching loss can be written as:

$$\mathcal{L}_{FM}(\theta) = \mathbb{E}_{t, p_t(x)} \| v_t(x) - u_t(x) \|^2 \tag{4}$$

This objective encourages the learned velocity field $v_t(t)$ to match the reference field u_t along the probability path p_t. In our method, the flow is conditioned on quantized latents $\hat{\boldsymbol{y}}$, and trained to predict the quantization residuals.

2.2. Residual Reconstruction

As shown in fig. 1a, the residual ($\mathbf{r} = \boldsymbol{y} - \hat{\boldsymbol{y}}$) between $\boldsymbol{y}$ and $\hat{\boldsymbol{y}}$ is inevitable. The error in the latent space will consequently also cause errors in the pixel space latent space. Previous approach LRP [6] has demonstrated that, in some cases, additive prediction method can produce excellent results. The latent residual flow matching attempts to reconstruction this quantization error $\boldsymbol{r}$ from the quantized latents $\hat{\boldsymbol{y}}$. The generated residual is added to the quantized latents, which achieves less reconstruction error and entropy. The decoder side pipeline can be written as:

$$\begin{aligned} \hat{\boldsymbol{r}} &= \mathrm{FM}(\hat{\boldsymbol{y}}) \\ \tilde{\boldsymbol{y}} &= \hat{\boldsymbol{y}} + \hat{\boldsymbol{r}} \\ \hat{\boldsymbol{x}} &= g_s(\tilde{\boldsymbol{y}}) \end{aligned} \tag{5}$$

Where the $\hat{\boldsymbol{r}}$ is reconstructed residual from FM. The optimization target for whole pipeline will be formulated as:

$$\mathcal{L} = \mathcal{L}_{RD} + \alpha \cdot \mathcal{L}_{FM} \tag{6}$$

To distinguish it from λ mentioned in eq. (2), we use α as the Lagrange multiplier.

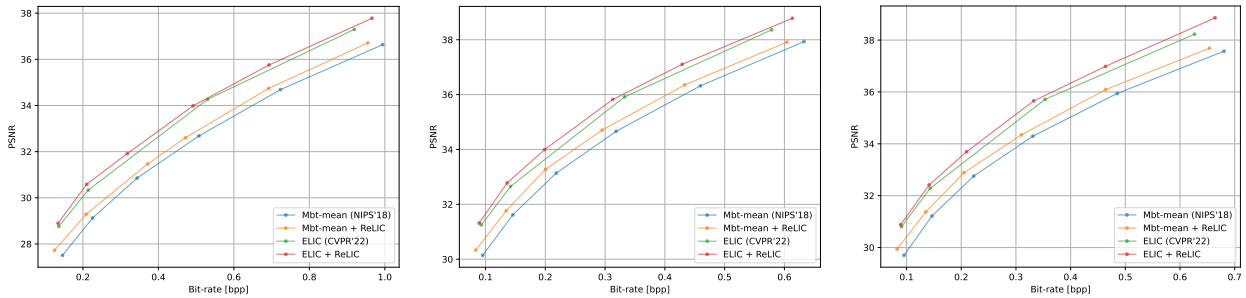

(a) Kodak (b) CLIC.m. (c) CLIC.p.

Fig. 2: R-D Curve of Compared Methods. Please zoom in for more details

Dataset	Method	BD-Rate(↓)	BD-PSNR(↑)	BD-MS-SSIM(↑)	BD-LPIPS(↓)	BD-CLIP(↑)
Kodak	Mbt-mean[13]	0.00	0.00	0.00	0.00	0.00
	Mbt-mean + ReLIC	-7.84%	0.37	0.31	-18.77%	0.34%
	ELIC[7]	-24.87%	1.27	0.92	-43.04%	0.68%
	ELIC + ReLIC	-27.36%	1.49	1.06	-45.57%	0.71%
CLIC.m.	Mbt-mean[13]	0.00	0.00	0.00	0.00	0.00
	Mbt-mean + ReLIC	-9.43%	0.39	0.37	-11.38%	0.15%
	ELIC[7]	-23.32%	1.08	0.65	-37.28%	0.23%
	ELIC + ReLIC	-26.56%	1.24	0.92	-48.68%	0.49%
CLIC.p.	Mbt-mean[13]	0.00	0.00	0.00	0.00	0.00
	Mbt-mean + ReLIC	-9.88%	0.40	0.39	-12.86%	0.15%
	ELIC[7]	-25.16%	1.15	0.73	-39.70%	0.31%
	ELIC + ReLIC	-27.66%	1.29	0.97	-50.78%	0.55%

Table 1: Quantitative results on three datasets.

3. EXPERIMENT

3.1. Experiment Details

To train ReLIC model, we selected first 300k images from OpenImage dataset. During training, the input images are cropped to 256×256 patches, and the batch size is set to 16. The Adam optimizer is used to train the model with the learning rate set to 1×10^{-4} at the first 36 epochs and 1×10^{-5} at the later 4 epochs.

Datasets. To validate the effectiveness of the proposed method and compare it to LRP [6], we select Kodak, CLIC professional (CLIC.p.) test and CLIC mobile (CLIC.m.) test to form test set. The test set images keep their original size.

Compared Methods. To validate the plug-and-play nature of our method, we also conducted comparisons on two different baselines: Mbt-mean [13], ELIC [7]. The former one does not adopt LRP, while the latter does.

Evaluation Metrics. We measure reconstruction performance by pixel-level distortion metrics PSNR, MS-SSIM. Additionally, we adopt reference perceptual metric LPIPS and CLIP similarity.

Code Reproducibility. For the baseline models, we use the code implementation and weight files from the CompressAI library. For Flow matching, we used the TorchCFM library, and the naming of the different flow matching methods also follows the abbreviations used in that library.

3.2. Rate-Distortion Performance

Table 1 shows the BD-metrics improvement achieved by our proposed method compared to baseline approaches across three datasets. Our method consistently enhanced both LRP and non-LRP baselines. For LRP baseline ELIC, our method ELIC + ReLIC achieves BD-Rate improvement of -2.49%, -3.23%, and -2.50% compared to ELIC Standard on the Kodak, CLIC.m. and CLIC.p. datasets, respectively, demonstrating the substantial improvements our approach provides. Furthermore, under without LRP circumstance, Mbt-mean + ReLIC achieve a higher BD-rate improvement, with specific values of -7.84%, -9.43%, and -9.88% on the three test datasets.

Overall, the ReLIC method can not only improve model performance without LRP but can also be combined with it to achieve superior results. This demonstrates the significant potential for integrating ReLIC with existing LRP baselines.

Figure 2 further illustrates the R-D curves for all methods. The proposed method consistently outperforms the standard optimized models, particularly in the high bpp range, demonstrating its superior R-D performance.

3.3. Efficiency Analysis

To further substantiate the efficiency of ReLIC, we compare it with various existing methods and systematically analyze the efficiency of the proposed method from the perspective of inference latency.

Method	Inference Latency (ms)		FLOPs
	Enc.	Dec.	(/G)
Mbt-mean[13]	65.8	66.8	28.74
Mbt-mean + ReLIC	65.9	70.3	71.58
ELIC[7]	312.8	190.8	54.46
ELIC + ReLIC	313.1	221.5	97.30

Table 2: Complexity comparison evaluated on Kodak

As show in Table 2, our ReLIC models do not bring introduce any additional latency at the encoding end. This is because our model primarily operates at the decoding end. For the decoding end, considering the R-D performance boost, the extra latency is relatively moderate. Compared to Diffusion models, Flow matching offers a significant speed advantage, which is why our method does not introduce much additional latency at the decoding end.

Although the FLOPs data indicates a substantial increase in computational operations with the addition of ReLIC, the impact on practical latency is minimal, demonstrating a key advantage of Flow Matching.

3.4. Ablation Study

In this section, we will further discuss two factors that influence Flow matching: the sampling time step and Hyper parameter α. All comparisons are based on the ELIC + ReLIC model and Kodak dataset.

Sampling Time Step. The number of sampling time steps are crucial for the performance of flow matching, directly impacting the trade-off between sampling speed and generation quality. A larger number of sampling steps generally results in better sample quality at the expense of slower inference. The empirical rule does not prove to be as effective for this residual reconstruction task.

Step	Dec.(ms)	Eval Loss(↓)
1	200.9	0.627
3	201.3	0.625
5	221.5	0.624
25	368.3	0.626
50	549.1	0.627

Table 3: Comparison of sampling time step.

As shown in Table 3, regarding inference latency, it still follows the rule that the larger the sampling time step, the higher the latency. Although the inference latency is minimal at a step size of 1, it achieves a better BD-rate at a step size of 5 than at a step size of 50. To strike a balance between compression performance and encoding time, we chose a sampling time step of 5.

α	Bit-Rate	PSNR	LPIPS	Eval Loss(↓)
0.01	0.319	31.90	0.0215	0.627
0.05	0.317	31.91	0.0211	0.624
0.10	0.315	31.85	0.0212	0.626
0.25	0.305	31.69	0.0215	0.627
0.50	0.257	30.57	0.0235	0.633

Table 4: Comparison of hyper parameter α. Sampling time step is set to 5 and λ is set to 0.0067.

Hyper parameter α. We explore the impact of hyper parameter α on model performance. The experimental results are shown in Table 4. For smaller values of α, the overall model behaves more like a VAE-based model. As the value of α increases, the model moves closer to a generative model, characterized by lower bitrates and PSNR but higher perceptual metrics. Our initial intention remains to let the VAE baseline take the dominant role, therefore based on the experiments above, we selected the hyper parameter α as 0.05.

4. CONCLUSION

In this paper, we have presented ReLIC, a novel hybrid architecture that addresses the longstanding trade-off between distortion and perception in learned image compression. By incorporating a Flow Matching generative model to reconstruct quantization residuals, ReLIC effectively mitigates the information loss introduced by quantization and significantly enhances perceptual quality. Our framework is lightweight, generalizable, and compatible with existing LIC systems, functioning either independently or alongside Latent Residual Prediction (LRP). Through extensive evaluations on multiple datasets and baselines, we demonstrate that ReLIC consistently improves both distortion-based and perceptual metrics, with minimal additional latency.

5. REFERENCES

[1] Gary J. Sullivan, Jens-Rainer Ohm, Woojin Han, and Thomas Wiegand, "Overview of the high efficiency video coding (HEVC) standard," IEEE Trans. Circuits Syst. Video Technol., vol. 22, no. 12, pp. 1649–1668, 2012.

[2] Benjamin Bross, Ye-Kui Wang, Yan Ye, Shan Liu, Jianle Chen, Gary J. Sullivan, and Jens-Rainer Ohm, "Overview of the versatile video coding (VVC) standard and its applications," IEEE Trans. Circuits Syst. Video Technol., vol. 31, no. 10, pp. 3736–3764, 2021.

[3] Johannes Ballé, Valero Laparra, and EeroP. Simoncelli, "End-to-end optimized image compression," International Conference on Learning Representations,International Conference on Learning Representations, Nov. 2016.

[4] Johannes Ballé, David Minnen, Saurabh Singh, Sung Jin Hwang, and Nick Johnston, "Variational image compression with a scale hyperprior," in 6th International Conference on Learning Representations, ICLR 2018, Vancouver, BC, Canada, April 30 - May 3, 2018, Conference Track Proceedings. 2018, OpenReview.net.

[5] Eirikur Agustsson, Fabian Mentzer, Michael Tschannen, Lukas Cavigelli, Radu Timofte, Luca Benini, and LucVan Gool, "Soft-to-hard vector quantization for end-to-end learning compressible representations," Neural Information Processing Systems,Neural Information Processing Systems, Apr. 2017.

[6] David Minnen and Saurabh Singh, "Channel-wise autoregressive entropy models for learned image compression," in 2020 IEEE International Conference on Image Processing (ICIP), Oct. 2020.

[7] Dailan He, Ziming Yang, Weikun Peng, Rui Ma, Hongwei Qin, and Yan Wang, "ELIC: efficient learned image compression with unevenly grouped space-channel contextual adaptive coding," in IEEE/CVF Conference on Computer Vision and Pattern Recognition, CVPR 2022, New Orleans, LA, USA, June 18-24, 2022. 2022, pp. 5708–5717, IEEE.

[8] Ian J. Goodfellow, Jean Pouget-Abadie, Mehdi Mirza, Bing Xu, David Warde-Farley, Sherjil Ozair, Aaron Courville, and Yoshua Bengio, "Generative adversarial networks," 2014.

[9] Fabian Mentzer, George Toderici, Michael Tschannen, and Eirikur Agustsson, "High-fidelity generative image compression," in Advances in Neural Information Processing Systems 33: Annual Conference on Neural Information Processing Systems 2020, NeurIPS 2020, December 6-12, 2020, virtual, Hugo Larochelle, Marc'Aurelio Ranzato, Raia Hadsell, Maria-Florina Balcan, and Hsuan-Tien Lin, Eds., 2020.

[10] Matthew J. Muckley, Alaaeldin El-Nouby, Karen Ullrich, Hervé Jégou, and Jakob Verbeek, "Improving statistical fidelity for neural image compression with implicit local likelihood models," in International Conference on Machine Learning, ICML 2023, 23-29 July 2023, Honolulu, Hawaii, USA, Andreas Krause, Emma Brunskill, Kyunghyun Cho, Barbara Engelhardt, Sivan Sabato, and Jonathan Scarlett, Eds. 2023, vol. 202 of Proceedings of Machine Learning Research, pp. 25426–25443, PMLR.

[11] Martin Heusel, Hubert Ramsauer, Thomas Unterthiner, Bernhard Nessler, and Sepp Hochreiter, "Gans trained by a two time-scale update rule converge to a local nash equilibrium," in Advances in Neural Information Processing Systems 30: Annual Conference on Neural Information Processing Systems 2017, December 4-9, 2017, Long Beach, CA, USA, Isabelle Guyon, Ulrike von Luxburg, Samy Bengio, Hanna M. Wallach, Rob Fergus, S. V. N. Vishwanathan, and Roman Garnett, Eds., 2017, pp. 6626–6637.

[12] Richard Zhang, Phillip Isola, Alexei A. Efros, Eli Shechtman, and Oliver Wang, "The unreasonable effectiveness of deep features as a perceptual metric," in 2018 IEEE Conference on Computer Vision and Pattern Recognition, CVPR 2018, Salt Lake City, UT, USA, June 18-22, 2018. 2018, pp. 586–595, Computer Vision Foundation / IEEE Computer Society.

[13] David Minnen, Johannes Ballé, and George Toderici, "Joint autoregressive and hierarchical priors for learned image compression," in Advances in Neural Information Processing Systems 31: Annual Conference on Neural Information Processing Systems 2018, NeurIPS 2018, December 3-8, 2018, Montréal, Canada, 2018, pp. 10794–10803.