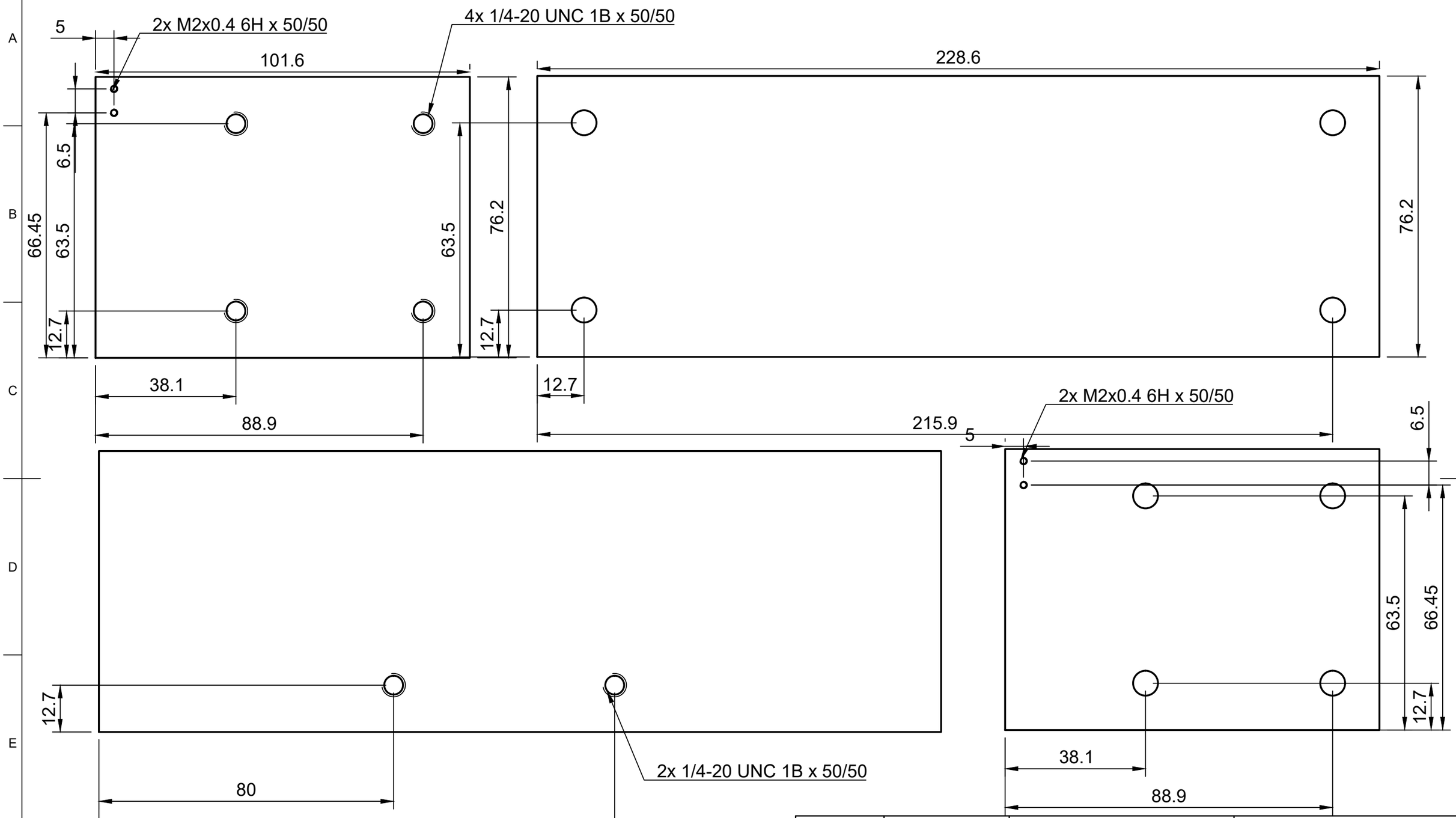

Dept.	Technical reference	Created by: Aaron Au 2022-08-23	Approved by
		Document type	Document status
		Title: Linear Stage Plates	DWG No.
		Rev. 1	Date of issue 2022-08-23 / Sheet 1/1