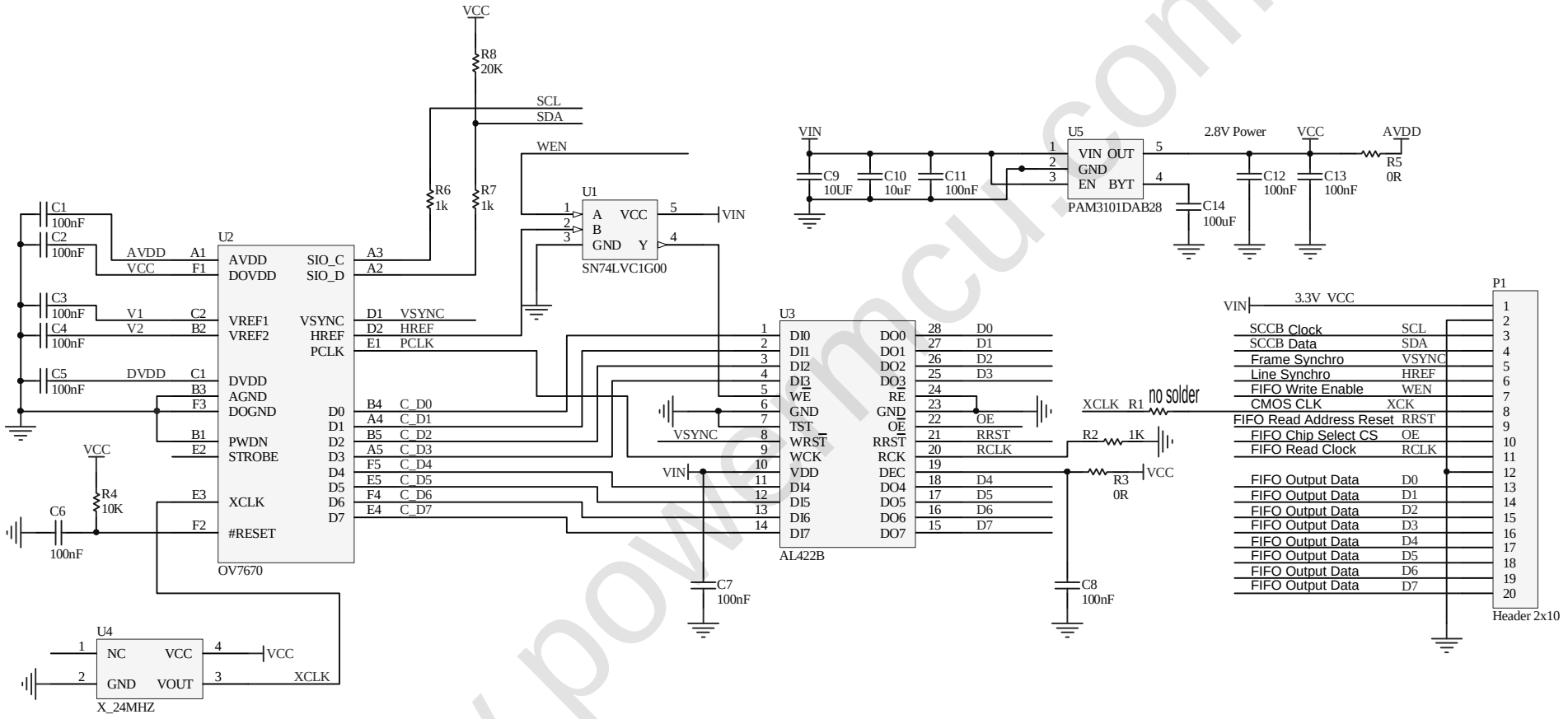

Title OV7670 + AL422B (FIFO) Camera Module(V2.0)		
Size A4	Number 1	Revision REV2.0
Date: 2012-5-21	Sheet of	
File: D:\OV7670+FIFO\7670.SCHDOC	Drawn By:	

www.powermcu.com