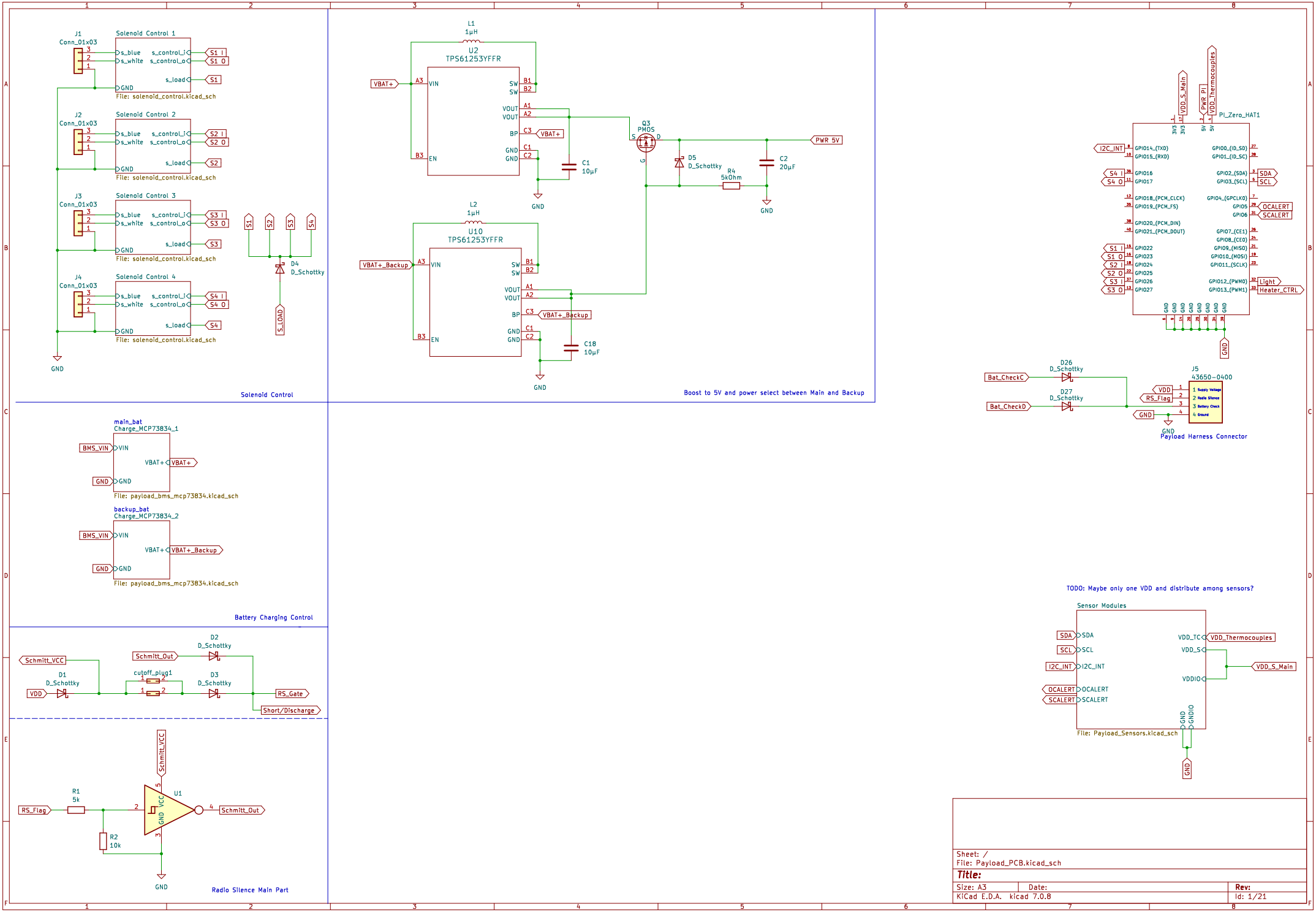
Solenoid Control 1
File: solenoid_control.kicad_sch
Solenoid Control 2
File: solenoid_control.kicad_sch
Solenoid Control 3
File: solenoid_control.kicad_sch
Solenoid Control 4
File: solenoid_control.kicad_sch
Solenoid Control
U2
TPS61253YFFR
U10
TPS61253YFFR
Q3
PMOS
D5
D_Schottky
R4
5kOhm
C1
10µF
C2
20µF
C18
10µF
PWR 5V
Boost to 5V and power select between Main and Backup
PI_Zero_HAT1
Payload Harness Connector
main_bat
Charge_MCP73834_1
backup_bat
Charge_MCP73834_2
File: payload_bms_mcp73834.kicad_sch
Battery Charging Control
Schmitt_VCC
Schmitt_Out
cutoff_plug1
RS_Gate
Short/Discharge
R1
5k
R2
10k
U1
Radio Silence Main Part
TODO: Maybe only one VDD and distribute among sensors?
Sensor Modules
File: Payload_Sensors.kicad_sch
Sheet: /
File: Payload_PCB.kicad_sch
Title:
Size: A3
Date:
Rev:
KiCad E.D.A. kicad 7.0.8
Id: 1/21

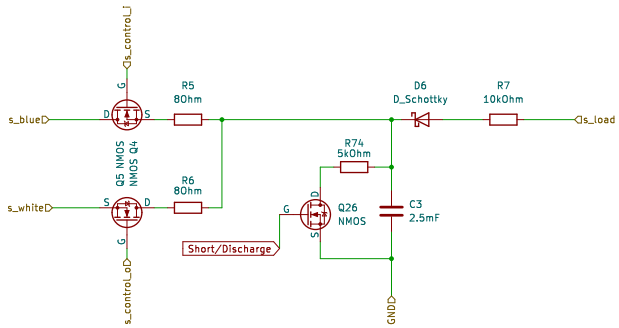

Sheet: /Solenoid Control 1/
File: solenoid_control.kicad_sch

Title:

Size: A4	Date:	Rev:
KiCad E.D.A. kicad 7.0.8		Id: 2/21

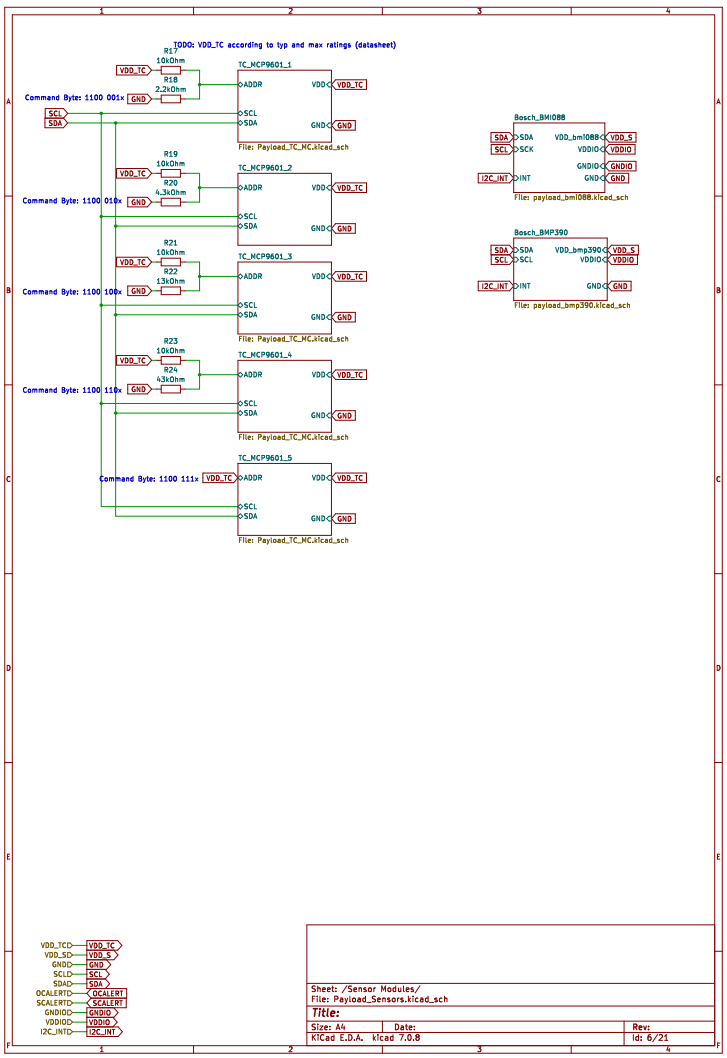

Sheet: /Sensor Modules/
File: Payload_Sensors.kicad_sch

Title:

Size: A4	Date:	Rev:
KiCad E.D.A. kicad 7.0.8		Id: 6/21

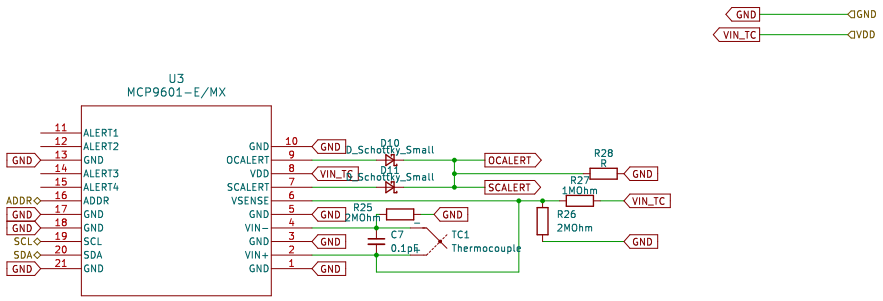

Sheet: /Sensor Modules/TC_MCP9601_1/
File: Payload_TC_MC.kicad_sch

Title:

Size: A4	Date:	Rev:
KiCad E.D.A. kicad 7.0.8		Id: 7/21

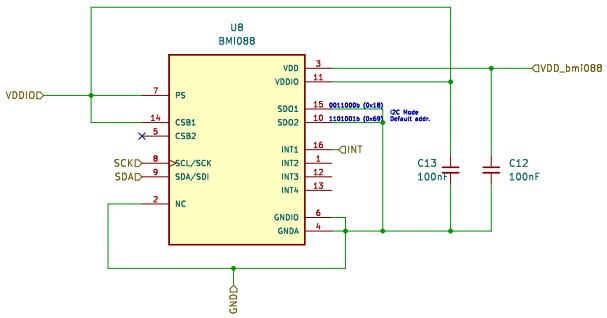

Sheet: /Sensor Modules/Bosch_BMI088/
File: payload_bmi088.kicad_sch

Title:

Size: A4	Date:	Rev:
KiCad E.D.A. kicad 7.0.8		Id: 12/21

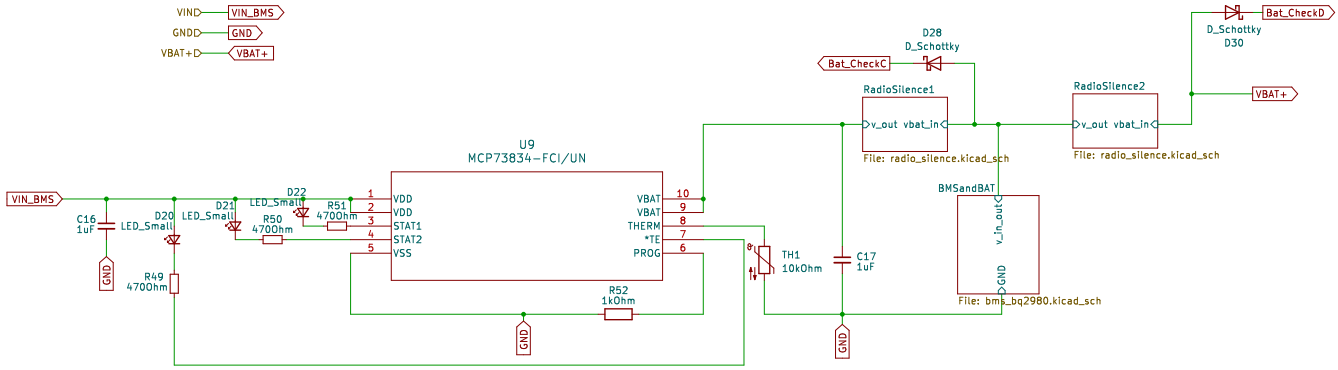

Sheet: /Charge_MCP73834_1/
File: payload_bms_mcp73834.kicad_sch

Title:

Size: A4	Date:	Rev:
KiCad E.D.A. kicad 7.0.8		Id: 13/21

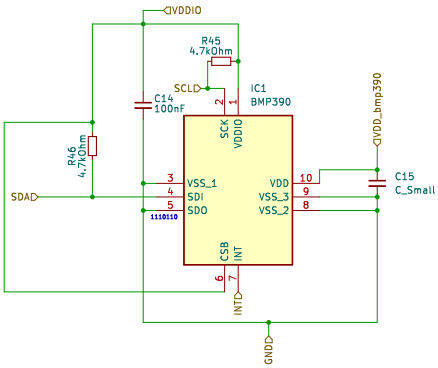

Sheet: /Sensor Modules/Bosch_BMP390/
File: payload_bmp390.kicad_sch

Title:

Size: A4	Date:	Rev:
KiCad E.D.A. kicad 7.0.8		Id: 15/21

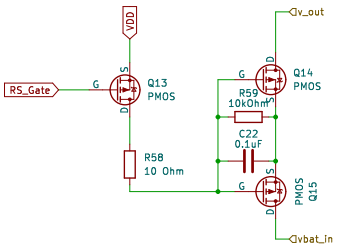

Sheet: /Charge_MCP73834_1/RadioSilence1/
File: radio_silence.kicad_sch

Title:

Size: A4	Date:	Rev:
KiCad E.D.A. kicad 7.0.8		Id: 16/21

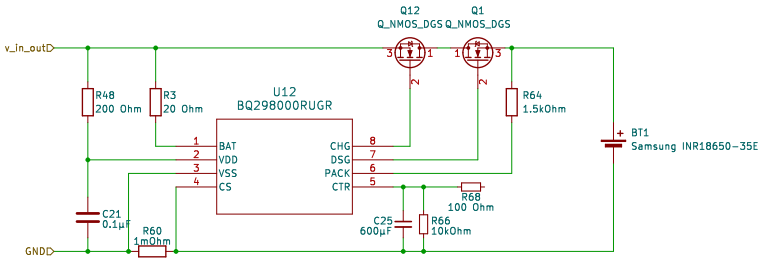

Sheet: /Charge_MCP73834_1/BMSandBAT/
File: bms_bq2980.kicad_sch

Title:

Size: A4	Date:	Rev:
KiCad E.D.A. kicad 7.0.8		Id: 18/21