Count: 63

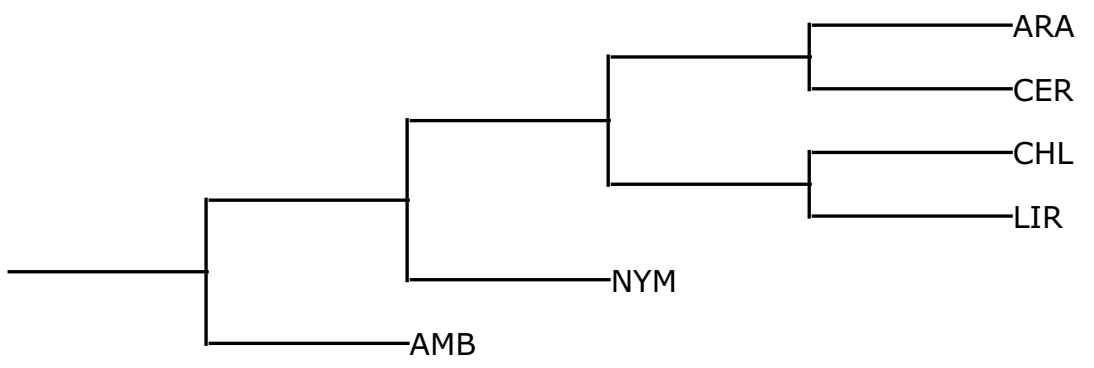

Count: 68

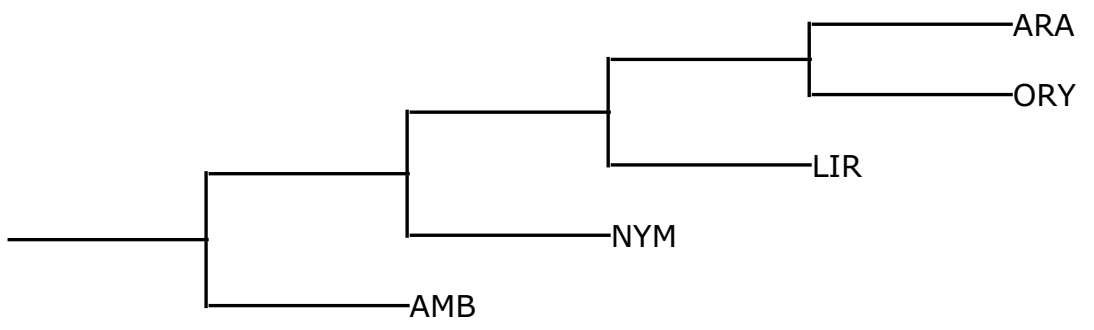

Count: 73

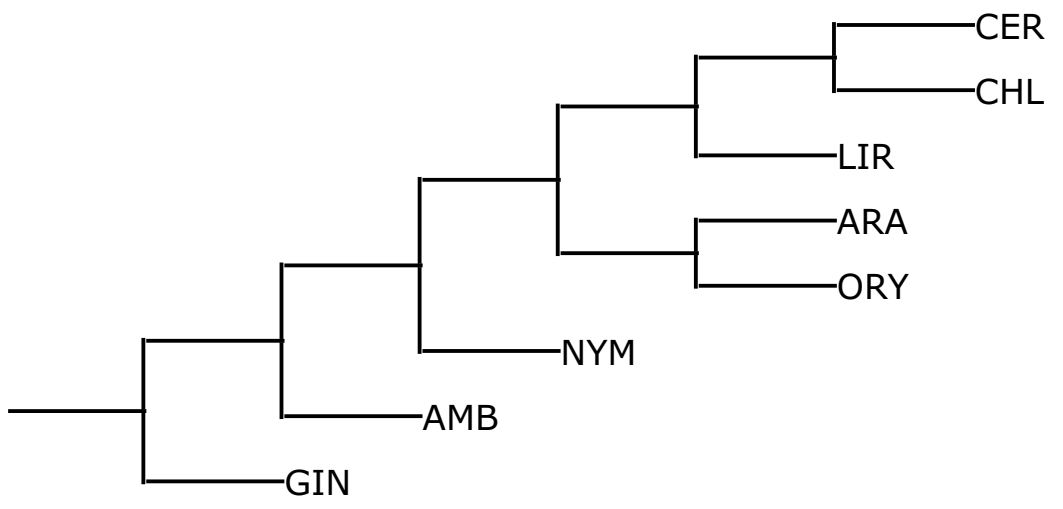

Count: 101

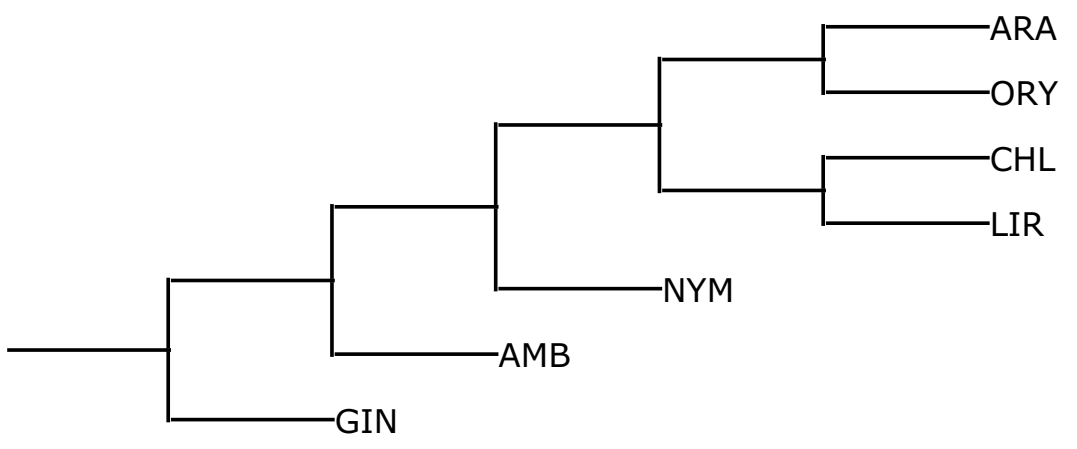

Count: 105

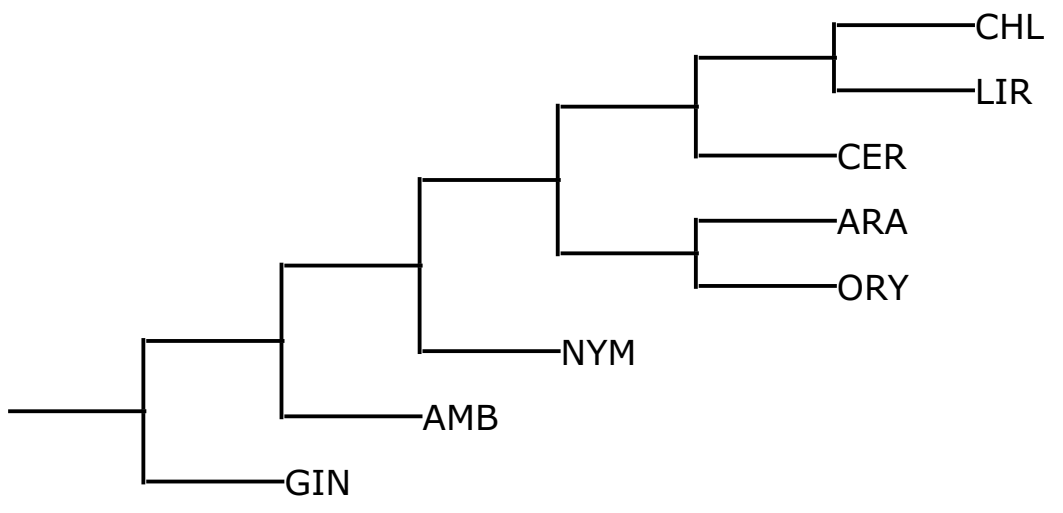

Count: 111

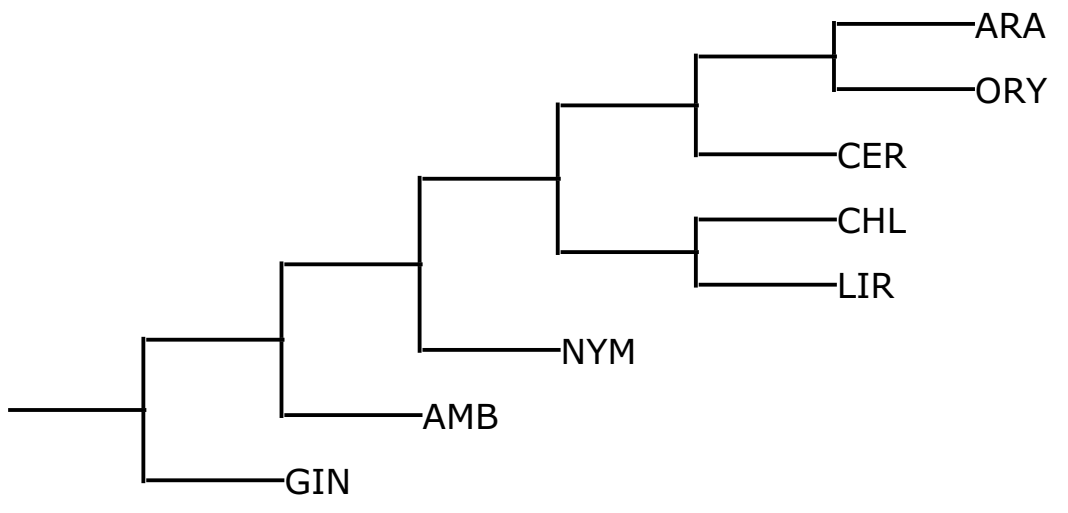

Count: 120

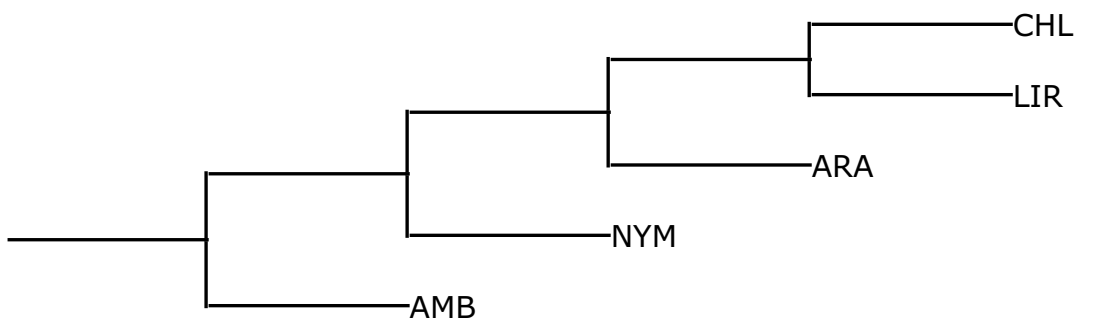

Count: 135

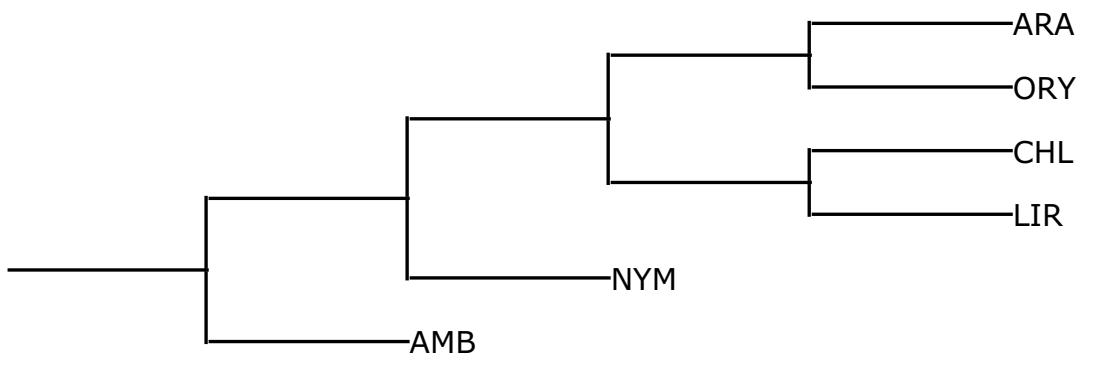
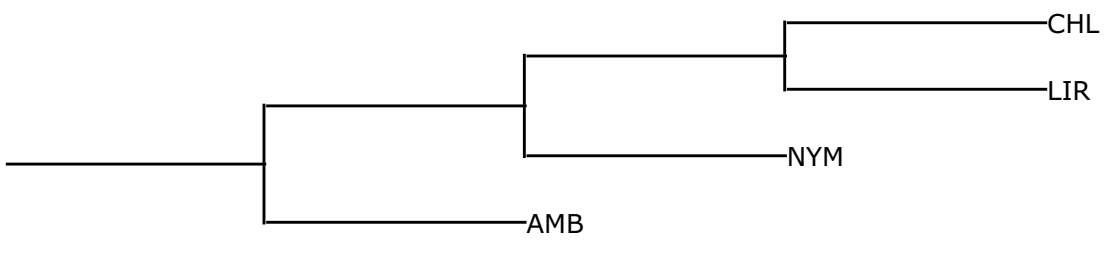
Count: 158