Count: 61

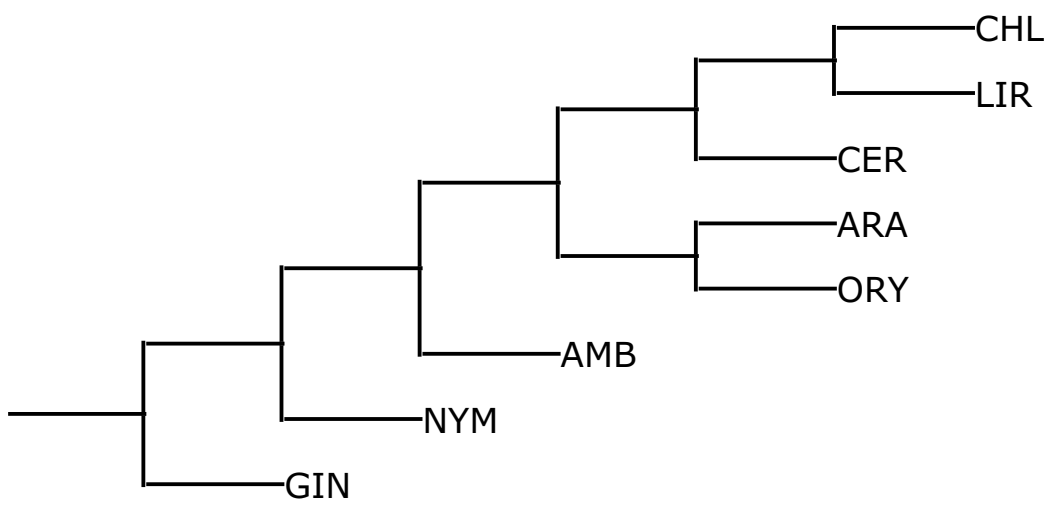

Count: 79

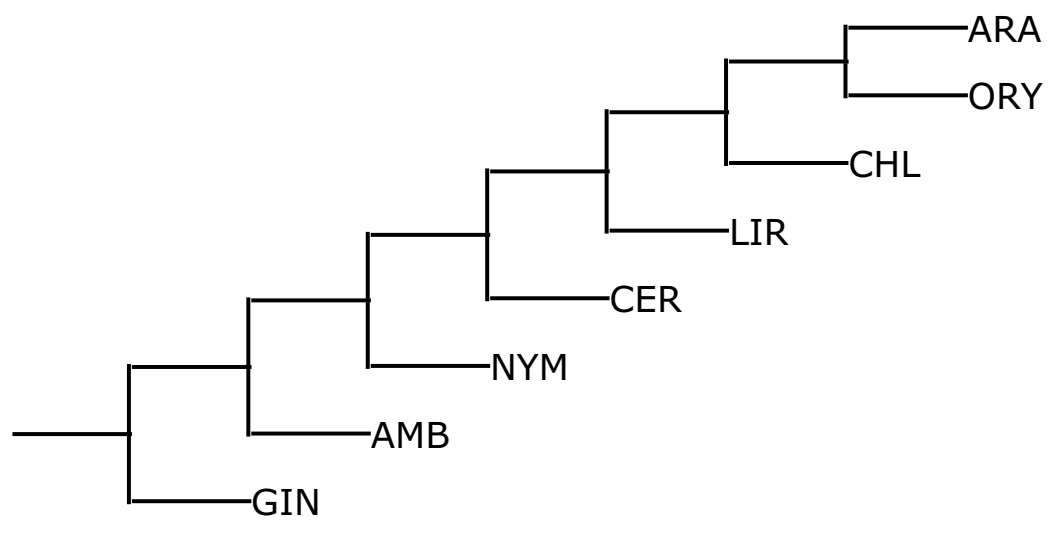

Count: 85

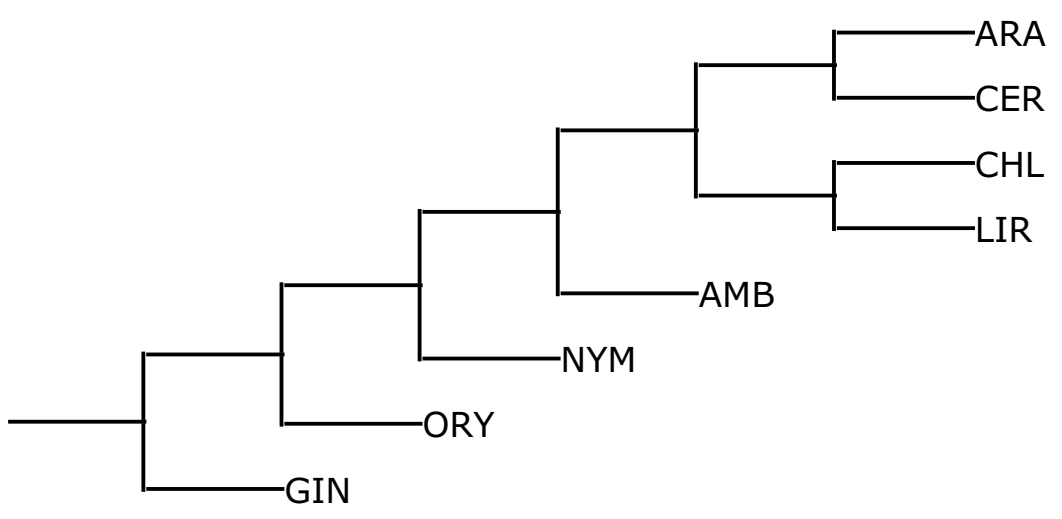

Count: 89

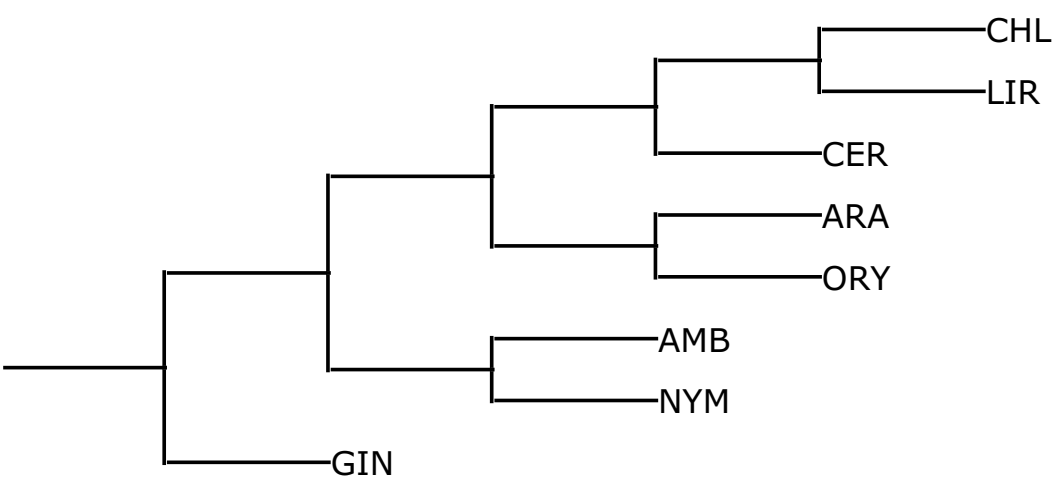

Count: 167

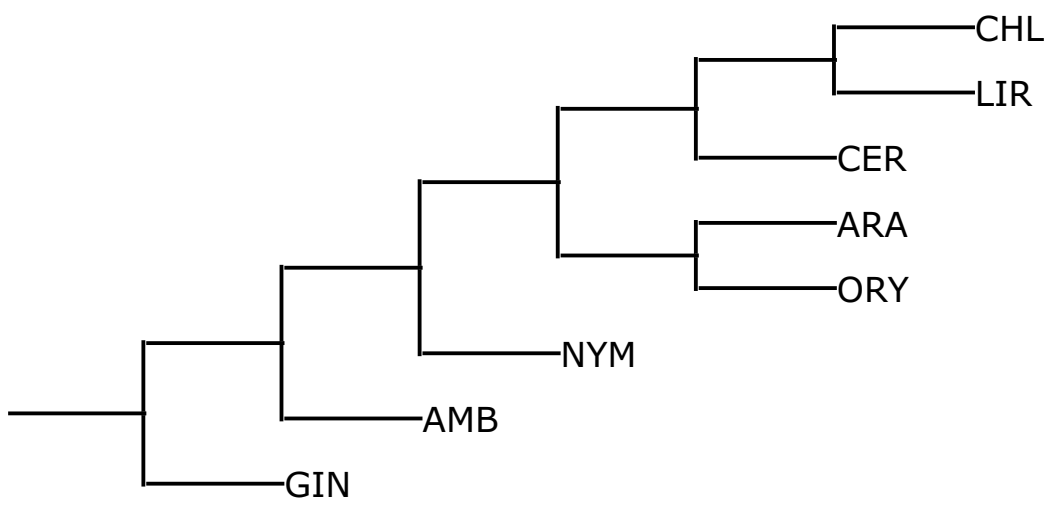

Count: 184

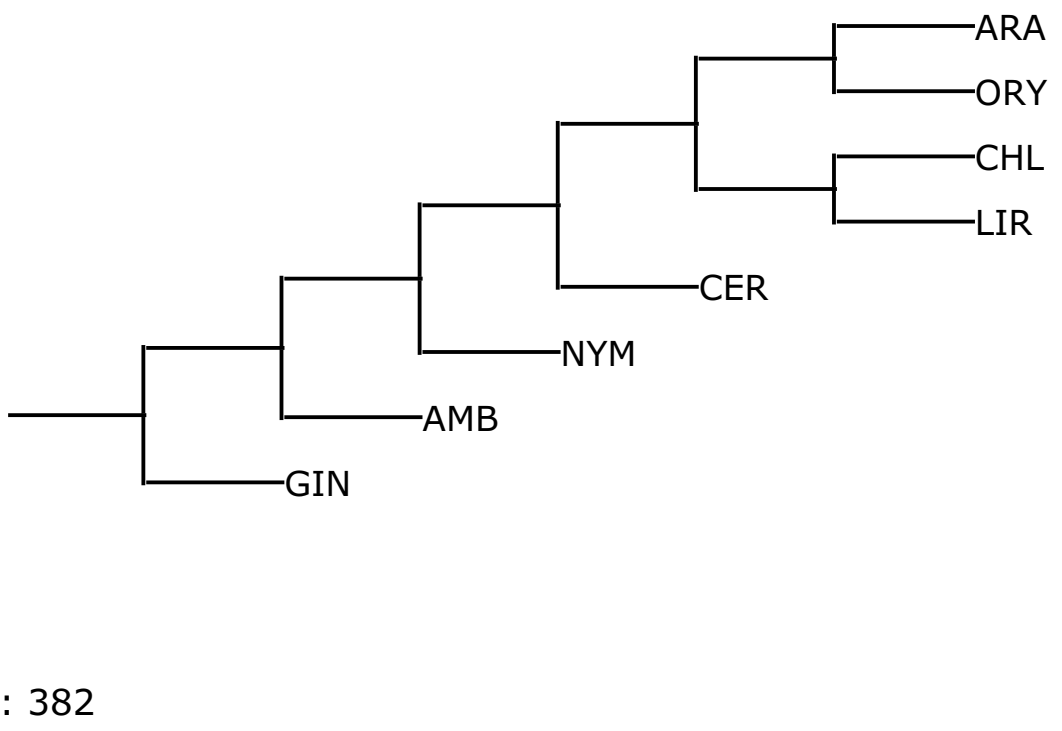

Count: 382

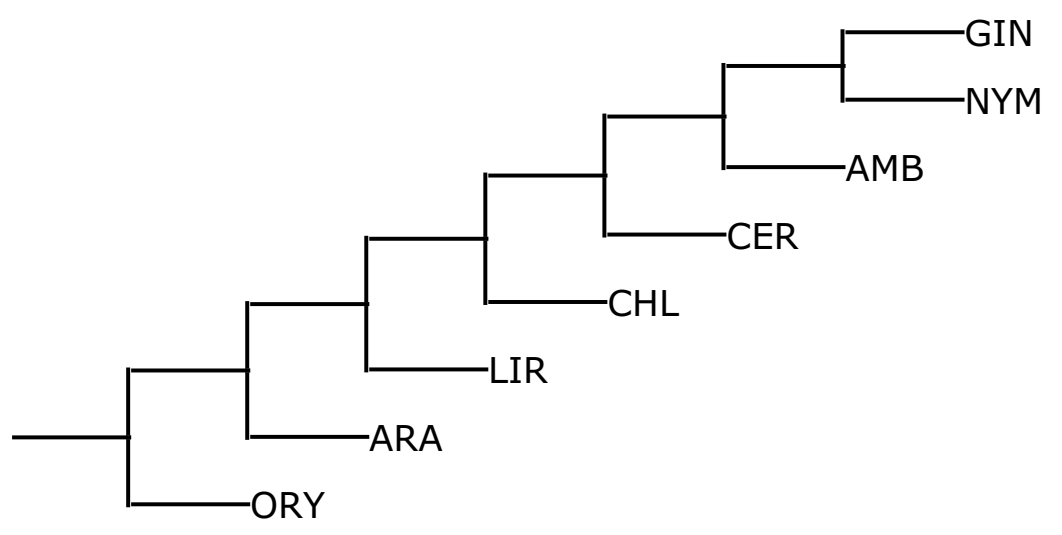

Count: 603

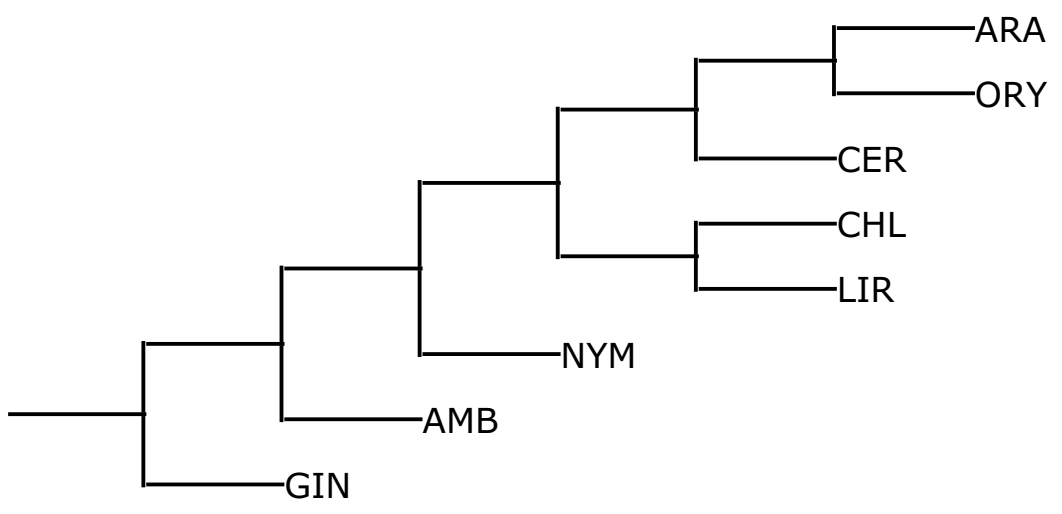
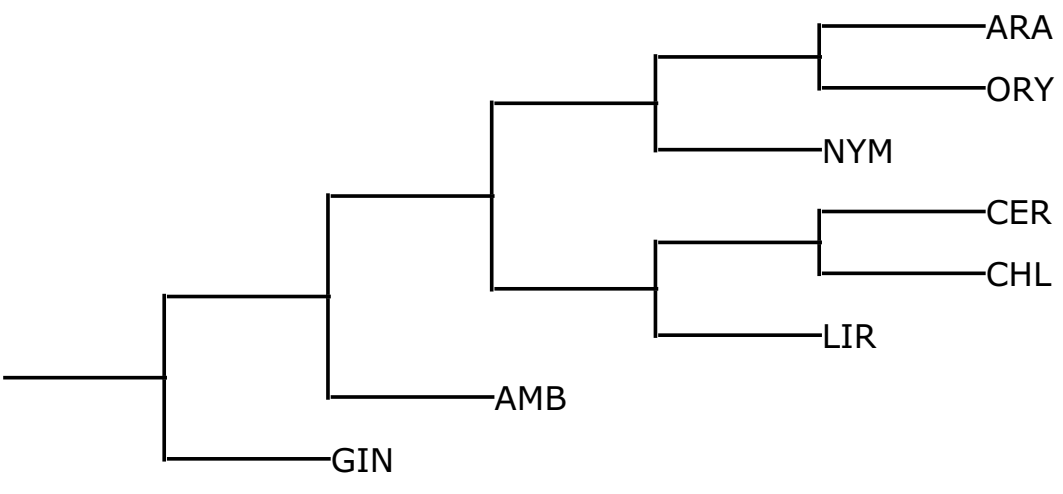
Count: 5681