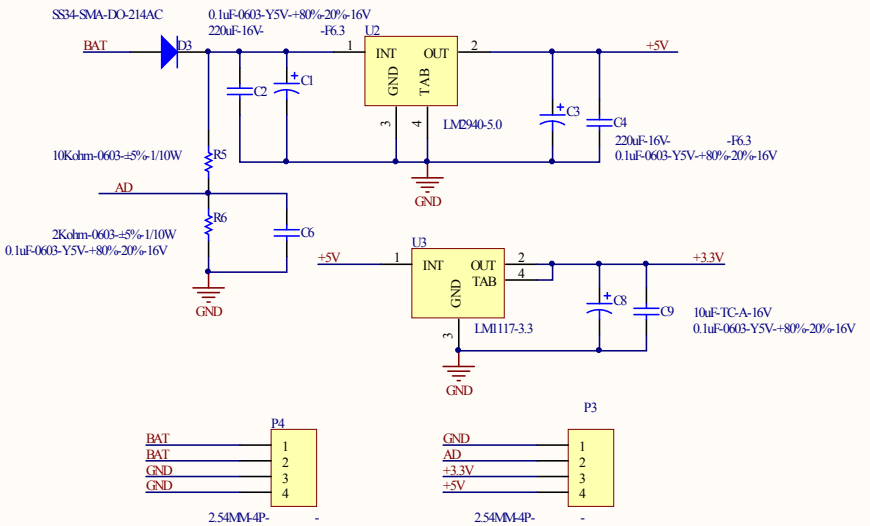

Title		
Size A4	Number	Revision
Date: 2018-08-11		Sheet of
File: H:\02 \..\ .SchDoc		Drawn By: