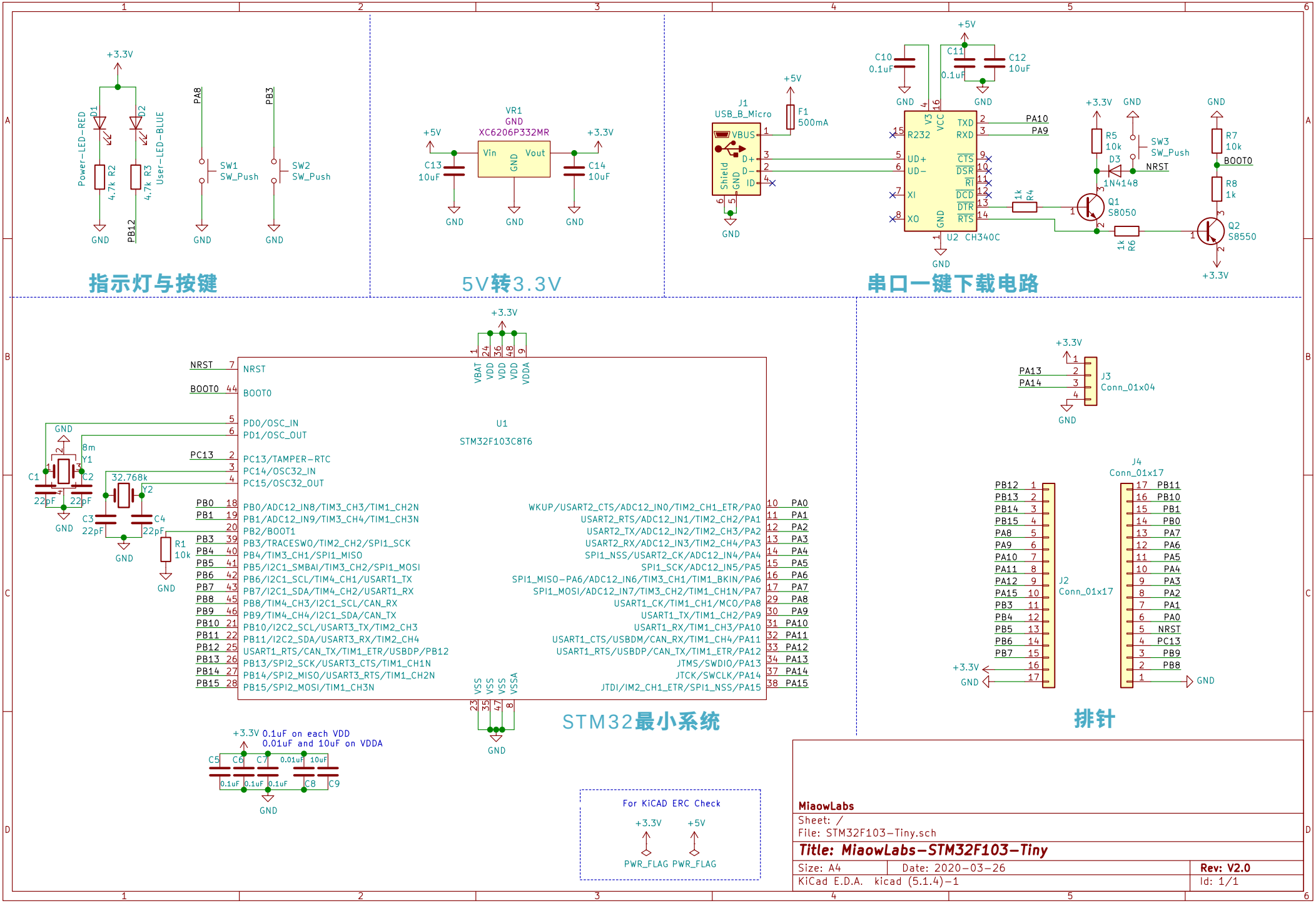
指示灯与按键
Power-LED-RED
User-LED-BLUE
D1
D2
R2 4.7k
R3 4.7k
PB12
PA8
PB3
SW1 SW_Push
SW2 SW_Push
+3.3V
GND
5V转3.3V
VR1
XC6206P332MR
Vin
Vout
C13 10uF
C14 10uF
+5V
+3.3V
串口一键下载电路
J1
USB_B_Micro
VBUS
D+
D-
ID
Shield
F1 500mA
C10 0.1uF
C11 0.1uF
C12 10uF
U2 CH340C
TXD
RXD
PA10
PA9
CTS
DSR
RI
DCD
DTR
RTS
R232
UD+
UD-
XI
XO
VCC
V3
R5 10k
D3 1N4148
SW3 SW_Push
NRST
R4 1k
Q1 S8050
R6 1k
R7 10k
R8 1k
BOOT0
Q2 S8550
STM32最小系统
U1
STM32F103C8T6
NRST
BOOT0
PD0/OSC_IN
PD1/OSC_OUT
PC13/TAMPER-RTC
PC14/OSC32_IN
PC15/OSC32_OUT
PB0/ADC12_IN8/TIM3_CH3/TIM1_CH2N
PB1/ADC12_IN9/TIM3_CH4/TIM1_CH3N
PB2/BOOT1
PB3/TRACESWO/TIM2_CH2/SPI1_SCK
PB4/TIM3_CH1/SPI1_MISO
PB5/I2C1_SMBAI/TIM3_CH2/SPI1_MOSI
PB6/I2C1_SCL/TIM4_CH1/USART1_TX
PB7/I2C1_SDA/TIM4_CH2/USART1_RX
PB8/TIM4_CH3/I2C1_SCL/CAN_RX
PB9/TIM4_CH4/I2C1_SDA/CAN_TX
PB10/I2C2_SCL/USART3_TX/TIM2_CH3
PB11/I2C2_SDA/USART3_RX/TIM2_CH4
USART1_RTS/CAN_TX/TIM1_ETR/USBDP/PB12
PB13/SPI2_SCK/USART3_CTS/TIM1_CH1N
PB14/SPI2_MISO/USART3_RTS/TIM1_CH2N
PB15/SPI2_MOSI/TIM1_CH3N
WKUP/USART2_CTS/ADC12_IN0/TIM2_CH1_ETR/PA0
USART2_RTS/ADC12_IN1/TIM2_CH2/PA1
USART2_TX/ADC12_IN2/TIM2_CH3/PA2
USART2_RX/ADC12_IN3/TIM2_CH4/PA3
SPI1_NSS/USART2_CK/ADC12_IN4/PA4
SPI1_SCK/ADC12_IN5/PA5
SPI1_MISO-PA6/ADC12_IN6/TIM3_CH1/TIM1_BKIN/PA6
SPI1_MOSI/ADC12_IN7/TIM3_CH2/TIM1_CH1N/PA7
USART1_CK/TIM1_CH1/MCO/PA8
USART1_TX/TIM1_CH2/PA9
USART1_RX/TIM1_CH3/PA10
USART1_CTS/USBDM/CAN_RX/TIM1_CH4/PA11
USART1_RTS/USBDP/CAN_TX/TIM1_ETR/PA12
JTMS/SWDIO/PA13
JTCK/SWCLK/PA14
JTDI/IM2_CH1_ETR/SPI1_NSS/PA15
VBAT
VDD
VDDA
VSS
VSSA
Y1 8m
Y2 32.768k
C1 22pF
C2 22pF
C3 22pF
C4 22pF
R1 10k
+3.3V 0.1uF on each VDD
0.01uF and 10uF on VDDA
C5 0.1uF
C6 0.1uF
C7 0.1uF
C8 0.01uF
C9 10uF
For KiCAD ERC Check
PWR_FLAG
排针
J3 Conn_01x04
J2 Conn_01x17
J4 Conn_01x17
PA13
PA14
MiaowLabs
Sheet: /
File: STM32F103-Tiny.sch
Title: MiaowLabs-STM32F103-Tiny
Size: A4
Date: 2020-03-26
Rev: V2.0
KiCad E.D.A. kicad (5.1.4)-1
Id: 1/1