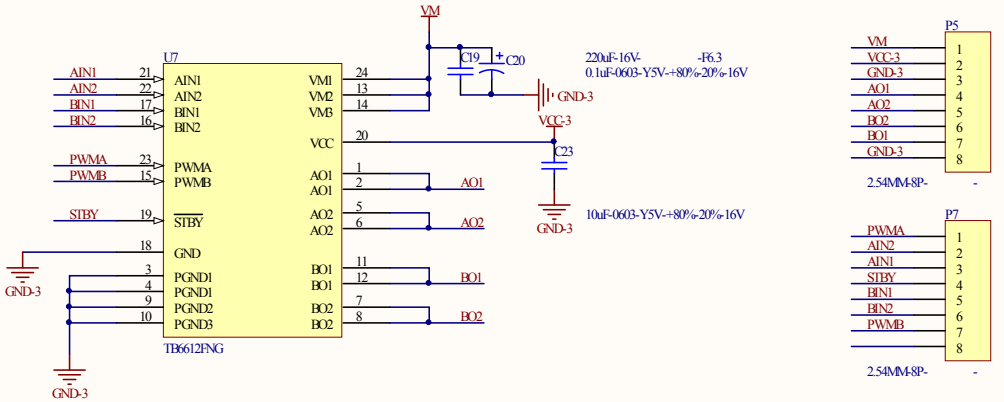

Title			
Size A4	Number		Revision
Date:	2018-08-11	Sheet of	
File:	H:\02 \..\TB6612FNG .SchDoc	Drawn By:	