4. Functions

C Programming

Agenda

- Designing Structured Programs
- Functions in C
- Inter-function Communication
- Standard Functions
- Scope

Designing Structured Programs

- Top-down approach for a complex problem
  1. Understand the problem as a whole
  2. Break it into simpler understandable parts
  3. Write subprograms for each of broken parts (module)

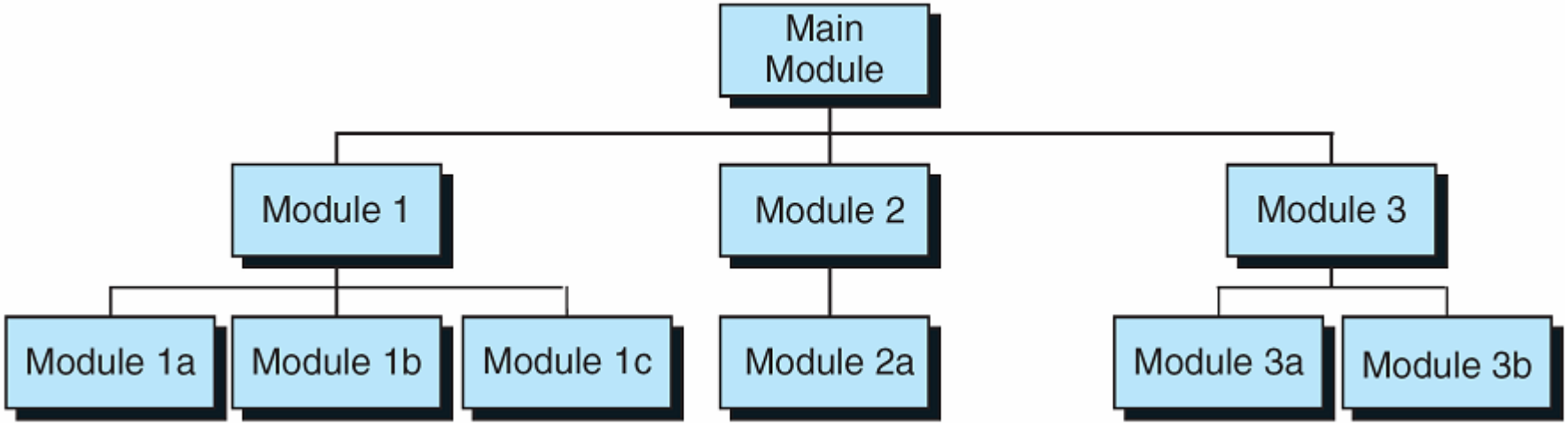

Functions in C

- C program is made of one or more functions
  - Idea of top-down design is supported by functions
  - Each function can call other functions
  - A program should have an entry function, "main"
    - Every program starts from main function

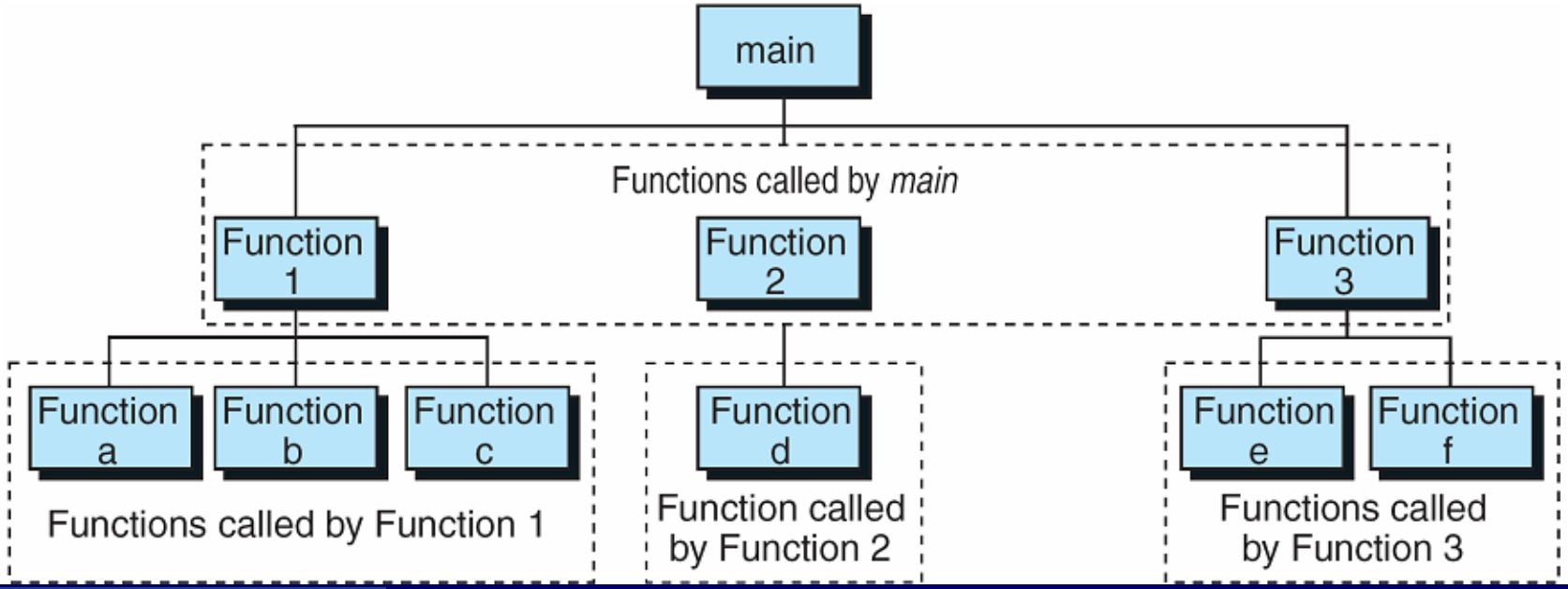

Example: Elephant.c

```
// This program prints the instructions to
    put an elephant into a refrigerator

#include <stdio.h>

// function declarations
void OpenDoor();
void PushElephantIntoRefrigerator();
void CloseDoor();

int main()
{
    // function calls
    OpenDoor();
    PushElephantIntoRefrigerator();
    CloseDoor();

    return 0;
}
```

```
// function definitions
void OpenDoor()
{
    printf("Open the door.₩n");
}

void PushElephantIntoRefrigerator()
{
    printf("Push the elephant into the
    refrigerator.₩n");
}

void CloseDoor()
{
    printf("Close the door.₩n");
}
```

Concept of Function

- What a function does?
  - Receive zero or more pieces of data
  - Operate on them
  - Additional actions (side effect)
  - Return at most one piece of data

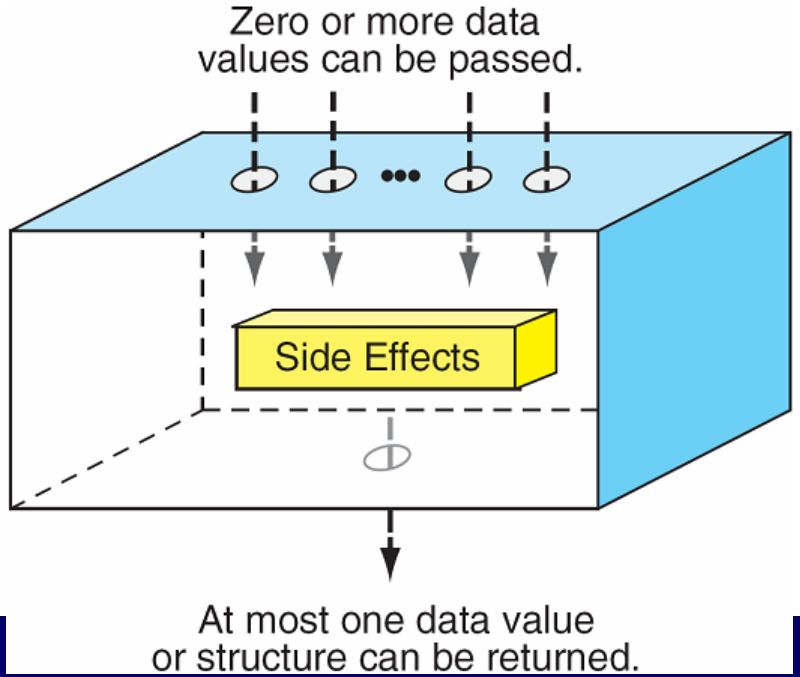

Functions in C

- Using functions
  - Function declaration
  - Function call
  - Function definition
- More about functions
  - Parameter passing
  - Return value
  - Bi-directional communication

Function Declaration

- Function should be declared before the function call.
  - It gives whole picture of the function
  - It mentions the name of the function, return type, and the type and order of formal parameter.

Ex) int multiply (int num1, int num2);

Function Call

- Function call (invocation)
  - Called function receives execution control from calling function
  - After execution, called function returns control to the calling function

```
#include <stdio.h>
void greetings(void);      // declaration

int main()
{
    // local declarations

    // statements
    …
    greetings();          // function call
    …

    return 0;
}
```

```
// function definition
void greetings(void)
{
    // no local declarations

    // statements
    printf("Hello, World!₩n");
}
```

Function Definition

- Function can be defined by header and body
  - Header: specification for return type, function name, formal parameters
  - Body: program codes to be executed
    - Consists of local declarations and statements

Function Header

```
return_type function_name (formal parameter list)
```

```
{
// Local Declarations
    …
// Statements
    …
}  // function_name
```

Function Body

```
// an example of function def.
void greetings()
{
    // no local declarations

    // statements
    printf("Hello, World!₩n");
}
```

Example: Multiply.c

```
#include <stdio.h>

// function declarations
int multiply(int num1, int num2);

main()
{
      int product, num1, num2;

      printf(“Enter two integers : ");
      scanf(“ %d %d", &num1, &num2);

      product = multiply(num1, num2);    // function call
      printf("₩t%d * %d is %d₩n", num1, num2, product);

}

// function definitions
int multiply(int num1, int num2)
{
      int product;

      product = mum1 * num2;
      return product;
}
```

Example: Circle.c

```
#include <stdio.h>

#define PI 3.141592F

// function declarations
float GetCircleSize(float radius);
float GetCircleCircumstance(float radius);

int main()
{
	float r = 0.F, s = 0.F, c = 0.F;

	printf("Input radius of a circle : ");
	scanf("%f", &r);

	s = GetCircleSize(r);
	c = GetCircleCircumstance(r);

	printf("₩tradius = %.2f₩n", r);
	printf("₩tsize = %.2f₩n", s);
	printf("₩tcircumstance = %.2f₩n", c);

	return 0;
}
```

```
// function definitions
float GetCircleSize(float radius)
{
	float size = radius * radius * PI;

	return size;
}

float GetCircleCircumstance(float radius)
{
	float circumstance = 2 * PI * radius;

	return circumstance;
}
```

Function with Parameters

- Parameters (arguments): information passed from calling function to called function

```
#include <stdio.h>
void Report(int num1, int num2, int sum);
int main()
{
    // local declarations
    int a = 10, b = 20;
    int c = 0;

    // statements
    c = a + b;          // c = 30
    Report(a, b, c);    // function call

    return 0;
}
```

num1 = a;
num2 = b;
sum = c;

formal parameter list

```
// function definition
void Report(int num1, int num2, int sum)
{
    // no local declarations

    // statements
    printf("%d + %d = %d₩n",
                num1, num2, sum);
}
```

Calling Function with Parameters

- Syntax of function call
  - function_name (actual_parameter_list);
    - Actual parameter list: list of values (or expressions) to send to called function

```
multiply ( 6, 7 )
multiply ( 6, b )
multiply ( multiply ( a, b ), 7 )
```

```
multiply ( a, 7 )
multiply ( a + 6, 7 )
multiply ( … ,  … )
```

expression

expression

Formal Parameter and Actual Parameter

- Formal parameters: variables declared in function header
- Actual parameters: values (or expressions) in calling statement
- Formal and actual parameters must match exactly in type, order and number.
- Value of an actual parameter is copied to the corresponding formal parameters

```
#include <stdio.h>
void Report(int num1, int num2, int sum);
int main()
{
    // local declarations
    int a = 10, b = 20;
    Report(a, b, a + b);      // function call

    return 0;
}
```

Actual parameters

Formal parameters

```
// function definition
void Report(int num1, int num2, int sum)
{
    // no local declarations

    // statements
    printf("%d + %d = %d₩n",
                        num1, num2, sum);
}
```

Function With Return Value

- Return value: information passed from called function to calling function

```
// Function Declaration
int multiply (int multiplier, int multiplicand );

int main (void)
{
    int product;
    …
    product = multiply (6, 7);
    …
    return 0;
}   // main
```

return_type
(Type of return value)

42

```
int multiply (int x, int y)
{
    return x * y;
}   // multiply
```

x	6
y	7

Function Definition

Function Declaration revisited

- Syntax of function declaration is similar to function header but…
  - Terminates with semicolon
  - Identifier names for parameters can be omitted

    Ex) int Multiply(int, int); // also OK, but not desirable

```
#include <stdio.h>
int Multiply(int n1, int n2);      // declaration
int main()
{
    int a = 10, b = 20;

    printf("%d * %d = %d₩n", a, b, Multiply(a, b));

    return 0;
}

// definition of Multiply
int Multiply(int num1, int num2)
{
    return num1 * num2;
}
```

Example: Print With Comma

- Print a number with comma (Ex: 123456 → 123,456)

```
#include <stdio.h>

void printWithComma (long num);

int main (void)
{
    long  number = 0;

    printf("₩nEnter a number with up to 6 digits: ");
    scanf ("%Ld", &number);
    printWithComma (number);

    return 0;
}              // main
```

Why Function?

- Advantages of using function
  - Problem factoring
  - Code reuse
  - System library functions

    Ex) standard I/O function (stdio.h),

    math functions (math.h)
  - Protect data
    - Local variable

Agenda

- Designing Structured Programs
- Functions in C
- <u>Inter-function Communication</u>
- Standard Functions
- Scope

Inter-Function Communication

- Types of inter-function communication
  - Downward communication: parameters
  - Upward communication: return value
  - Bi-directional communication: pointers

    Ex) Modifying a variable in calling function from called function

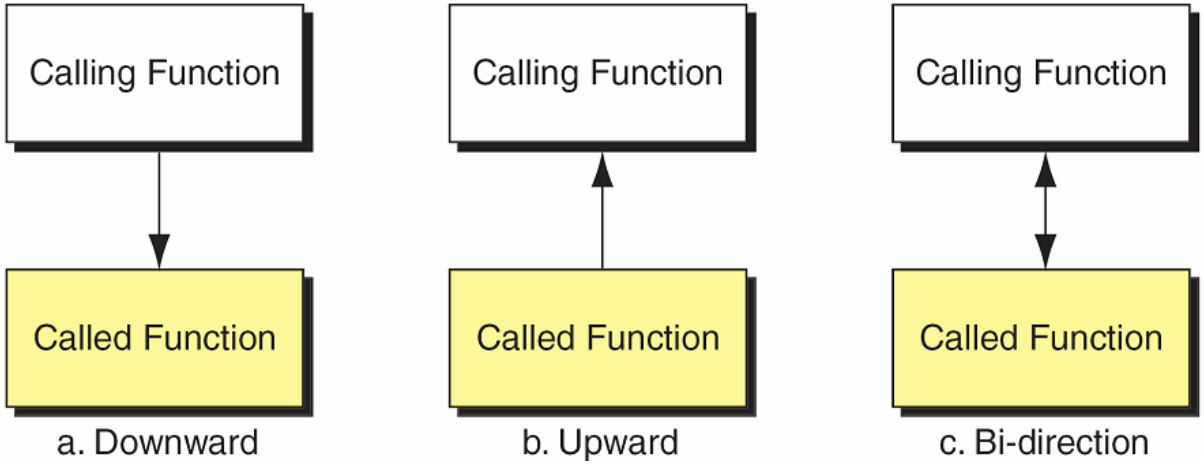

Downward Communication

- In C function call, actual parameters are copied to formal parameters (Call-by-value)

```
// Function Declaration
void downFun (int x, int y);
int main (void)
{
// Local Definitions
   int a = 5;
// Statements
   downFun (a, 15);
   printf("%d\n", a);
   return 0;
}  // main
```

prints 5

```
   void downFun (int x, int y)
   {
   // Statements
      x = x + y;
      return;
   }  // downFun
```

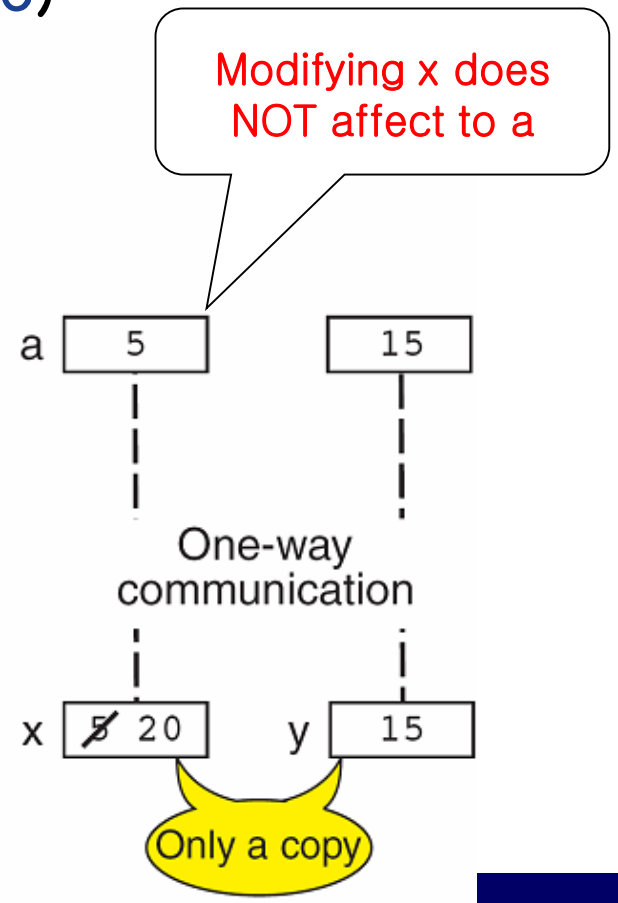

Bi-Directional Communication

- Three aspects of a variable: name, value, address
  - Address: location of variable in memory

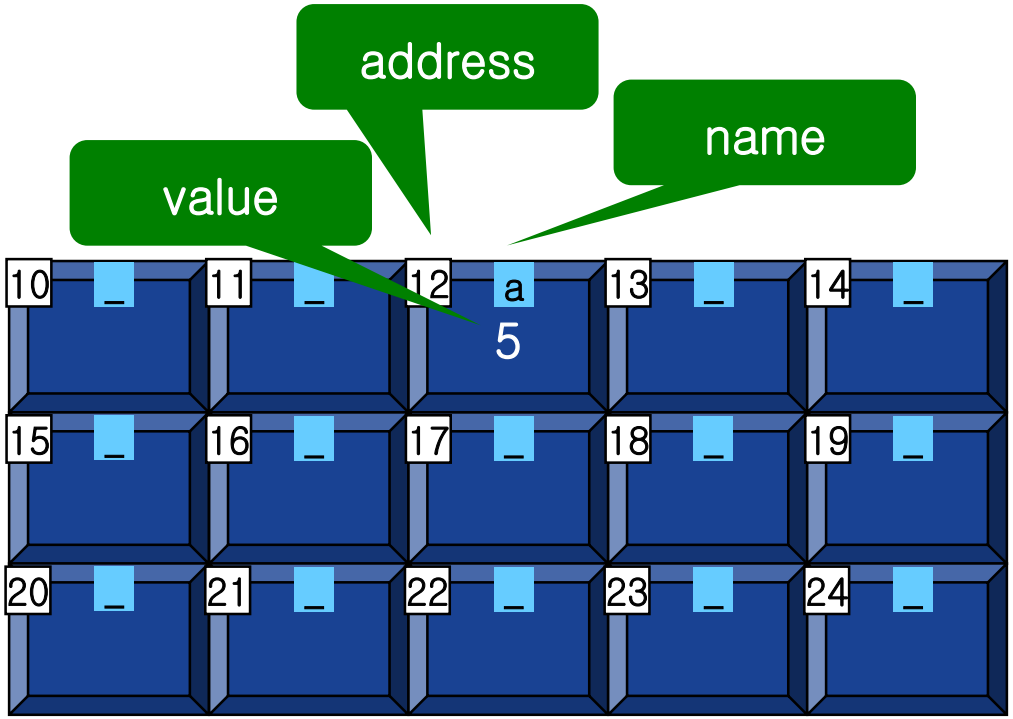

Mail box (memory)

Bi-Directional Communication

- Bi-directional communication by passing address
  - Calling function does not send value of a variable, but address of it
  - Called function receives the address using pointer variable
    - Pointer variable: variables to store address of other variables

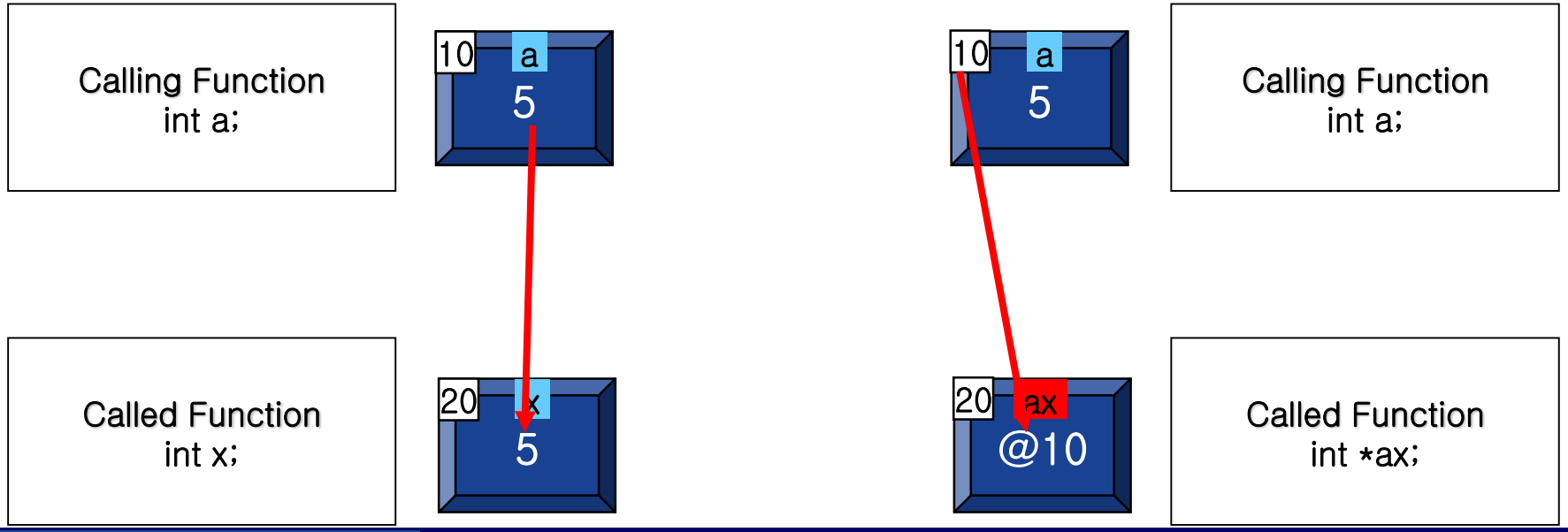

Pointer Variables

- To modify value of a variable in calling function, we need …
  1. Syntax of pointer variables
  2. To extract address of a variable
  3. To access value pointed by pointer variable

```
int main (void)
{
    int a;
    int b;
    ...
    upFun (&a, &b);
    ...
}   // main
```

2

1

```
void upFun (int* ax, int* ay)
{
    *ax = 23;
    *ay = 8;
    return;
}   // upFun
```

3

Bi-Directional Communication

- Syntax of pointer variables: <type> * <identifier>

```
Ex) int *pi;          // pointer for integer variables
    float *pf;        // pointer for float variables
    char *pc;         // pointer for char variables
```

- Extracting address of a variable: address operator &

```
Ex) int a, b;
    upFun(&a, &b);
```

- Accessing value pointed by pointer variable: indirection operator *

```
Ex) *ax = 23;
    *ay = 8;
```

Example: Exchange Function

- Exchanging two variables
  - Incorrect example

```
int x = 10, y = 20;
x = y;              // value of x is lost!
y = x;              // value of x is 20
```

  - Correct example

```
int x = 10, y = 20, hold = 0;
hold = x;           // save value of x
x = y;
y = hold;           // set y by old value of x
```

Example: Exchange Function

- Calling function

```
int main()
{
    int a = 10, b = 20;
    …
    Exchange(a, b);
    …
}
```

- Called function

```
void Exchange(int x, int y)
{
    int hold = 0;
    hold = x;
    x = y;
    y = hold;
}
```

x and y are exchanged, but a and b are not

- Calling function

```
int main()
{
    int a = 10, b = 20;
    …
    Exchange(&a, &b);
    …
}
```

- Called function

```
void Exchange(int *x, int *y)
{
    int hold = 0;
    hold = *x;
    *x = *y;
    *y = hold;
}
```

Example: Quotient and Reminder

- Get two numbers and print. Print their quotient and reminder

```
#include <stdio.h>
void divide (int  dividend, int  divisor, int* quotient, int* remainder);

int main()
{
    int num1 = 0, num2 = 0;
    int quo = 0, rem = 0;
    scanf(“ %d %d”, &num1, &num2);
    divide(num1, num2, &quo, &rem);
    printf(“%d / %d = %d₩n”, num1, num2, quo);
    printf(“%d %% %d = %d₩n”, num1, num2, rem);

    return;
}

void divide (int  dividend, int  divisor, int* quotient, int* remainder)
{
    *quotient  = dividend / divisor;
    *remainder = dividend % divisor;
    return;
}
```

Exercise

- Write a program sumprod.c that reads two integers and prints their sum and product.
  - Implement and use a function “ReadTwoNumbers” to read the two numbers.
  - Implement and use a function “GetSumAndProduct” to compute the sum and the product.

Agenda

- Designing Structured Programs
- Functions in C
- Inter-function Communication
- <u>Standard Functions</u>
- Scope

Standard Functions

- Standard functions: built-in functions provided by C language itself
  - Function definition: system library
    - Integrated by linker
  - Function declaration: system header files
    - To use standard functions, proper header files should be included

      Ex) stdio.h for printf, scanf
    - Locations of system header files avary with system.

      Ex) C:₩Dev-Cpp₩include

      Cf) #include < > vs. #include “ ”

Linking

- Linking
  - Integrating objects and library modules required to execute

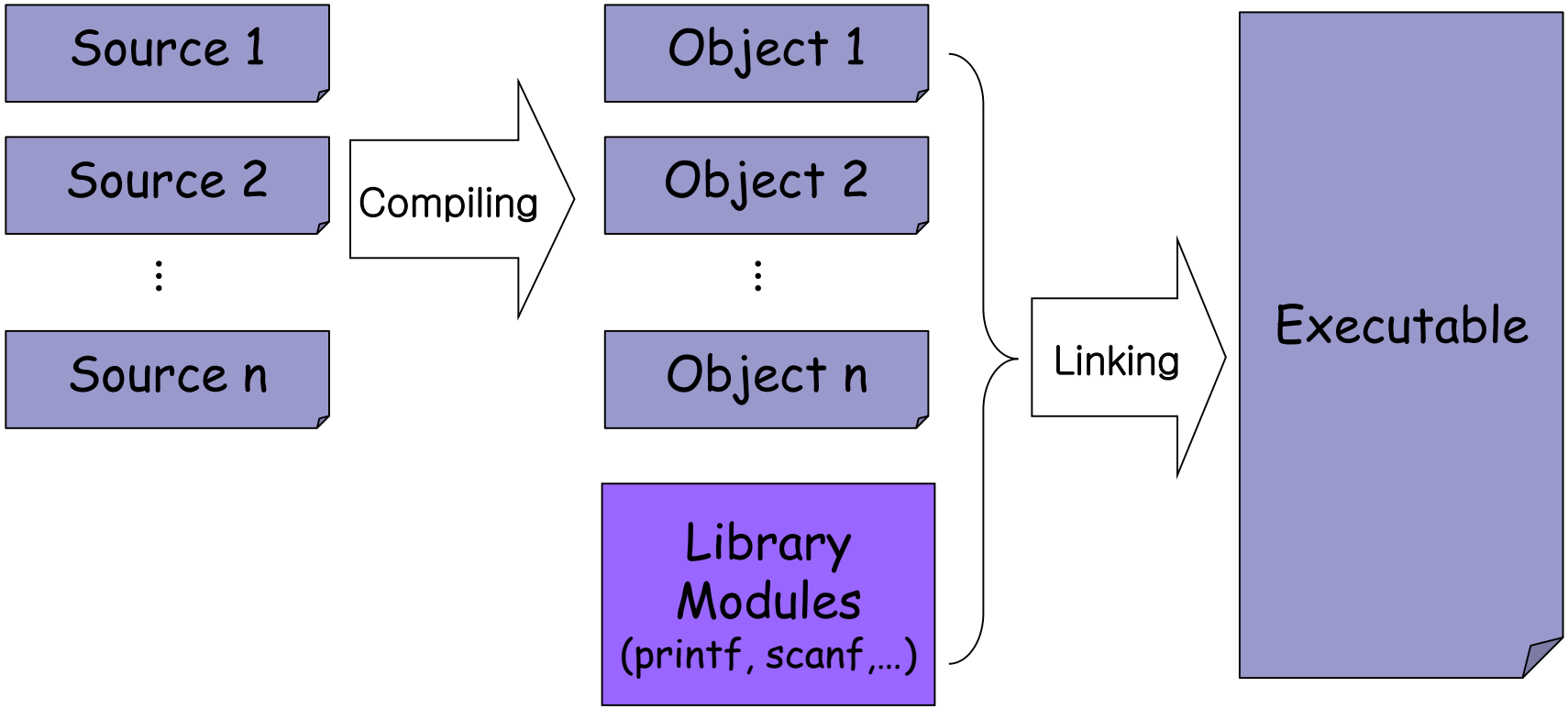

Standard Functions

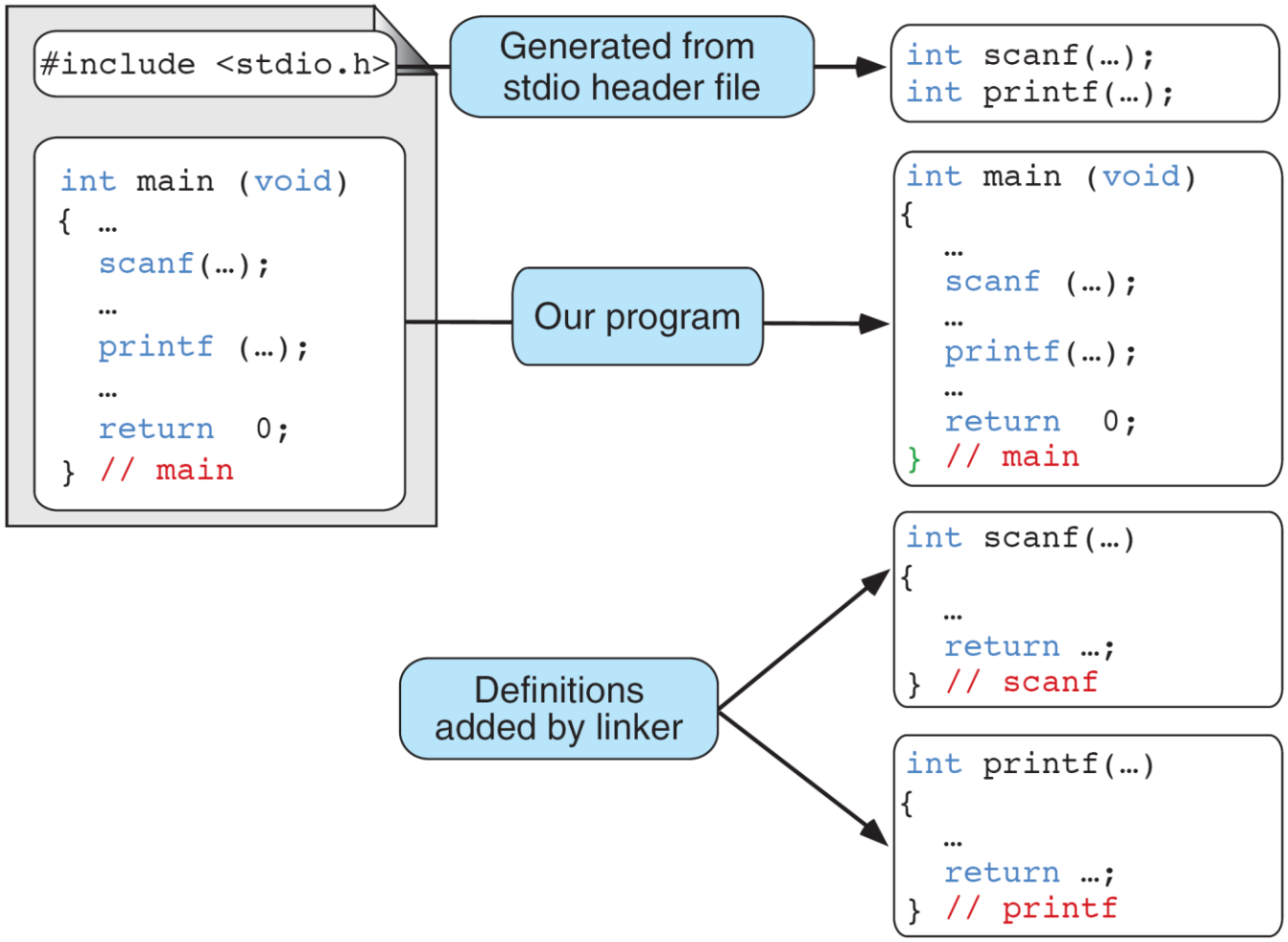

Standard Functions

- C provides a rich collection of standard functions
  - Standard I/O (stdio.h)
    - printf, scanf, getchar, fprintf, fscanf, …
  - Math library (math.h)
    - abs, sin, cos, rand, …
  - Type library (ctype.h)
    - isalpha, isdigit, …
  - String manipulation (string.h)
    - strcpy, strcat, strcmp, …
  - ETC.

- References
  - Textbooks
    - Appendix F of text
  - C/C++ reference sites
    - http://www.cppreference.com
    - http://msdn.microsoft.com
  - Manual page on UNIX (incl. cygwin)

    Ex) $ man –s3 printf // –s3 specifies section for library functions

Examples of Standard Functions

- Absolute value (math.h)
  - int abs(int); // abs(-1) = 1;
  - long labs(long); // labs(-2000000L) = 2000000L;
- Random number generation (stdlib.h)
  - void srand(unsigned int seed); // initialize random seed
  - int rand(void); // generate a random range 0 to RAND_MAX
    - RAND_MAX is defined in stdlib.h
- Current time (time.h)
  - time_t time(time_t *); // get current time
- More on section 4.5

Random Number

- C language cannot generate truly random number but pseudo random number from previous number (seed)
  - Pseudo random numbers depend on previous number, but seems to be random

Ex) next random = (18394 * seed + 2567) % 32768

seed = next_random

Just an example!

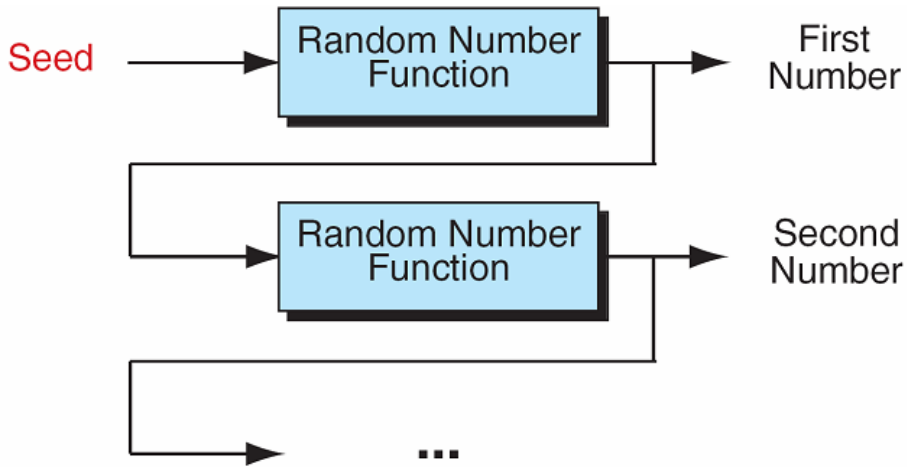

Random Number

- Specifying random seed

  Ex) initializing seed with a constant → generate same sequence for all executions

```
srand(997);
printf("rand() = %d₩n", rand());
printf("rand() = %d₩n", rand());
printf("rand() = %d₩n", rand());
```

  Ex) initializing seed according to current time → generate different sequence in every run

```
srand(time(NULL));
printf("rand() = %d₩n", rand());
printf("rand() = %d₩n", rand());
printf("rand() = %d₩n", rand());
```

Random Number

- If we want to a random number in a specific range, return value of rand() should be scaled.
  - rand() % range + mininum;
    - range = (maximum – minimum) + 1 // [mininum, maximum]

Ex) random number between 3 and 7

rand_num = rand() % 4 + 3;

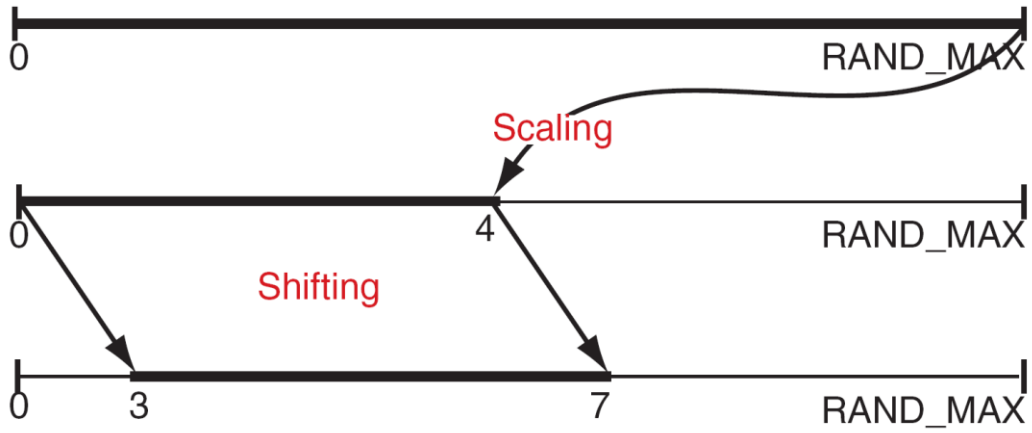

Agenda

- Designing Structured Programs
- Functions in C
- Inter-function Communication
- Standard Functions
- <u>Scope</u>

Scope

- Scope: region of program in which a defined object is visible
  - Global scope: object visible from its declaration to the end of program
  - Local scope: object that exists only from its declaration to the end of function or block (compound statement)

```
#include <stdio.h>
int sum = 0;            // global declaration
main(void)
{
   int a = 0, b = 0;   // local declaration
   // some codes
}
```

Scope

```
/* This is a sample to demonstrate scope. The techniques
   used in this program should never be used in practice.
*/
#include  <stdio.h>
int fun (int a, int b);
```

Global area

```
int main (void)
{
  int   a;
  int   b;
  float y;
  …
    {  // Beginning of nested block
      float a = y / 2;
      float y;
      float z;
      …
      z = a * b;
      …
    }  // End of nested block
  …

}  // End of main
```

main's area

Nested block area

```
int fun (int i, int j)
{
   int a;
   int y;
   …
}  // fun
```

fun's area

Scope

- Smaller scope gets higher priority

  Ex) **float a** and **float y** overrides **int a** and **int y** in previous code

- Programming style
  - It is poor programming style to reuse identifiers within the same scope.

scanf()

scanf() example

```
int testEOF, i, j, k;

printf("Enter two integers : ");
testEOF = scanf(" %d %d",&i, &j);
printf("tsetEOF is %d₩n",testEOF);

printf("Enter three integers : ");
testEOF = scanf(" %d %d %d",&i, &j, &k);
printf("testEOF is %d₩n",testEOF);
```

scanf() example

- Add a list of integers from keyboard

  Ex) Enter your numbers: <EOF> to stop.

  10 15 20 25

  <CTRL-z>

  Total: 70

```
printf("Enter your numbers <EOF> to stop.₩n");

testEOF = scanf("%d", &x);
while(testEOF != EOF){
        sum += x;
        testEOF = scanf("%d", &x);
}
printf("Total: %d₩n", sum);
```

scanf() example

```
main(){
   int sum = 0;
   int testEOF = 0, x;

   printf("Enter your numbers <EOF> to stop.₩n");

   while( scanf("%d", &x) != EOF){
         sum += x;
   }
   printf("Total: %d₩n", sum);
}
```

Exercise

- Write a program that reads integers from the standard input, and prints the number of positive, negative, and zero values.

```
Enter integers : <EOF> to stop
2  -3  0  -10  -28  934
<EOF>
You entered :
        2 positive integer
        1 zero
        3 negative integers
```