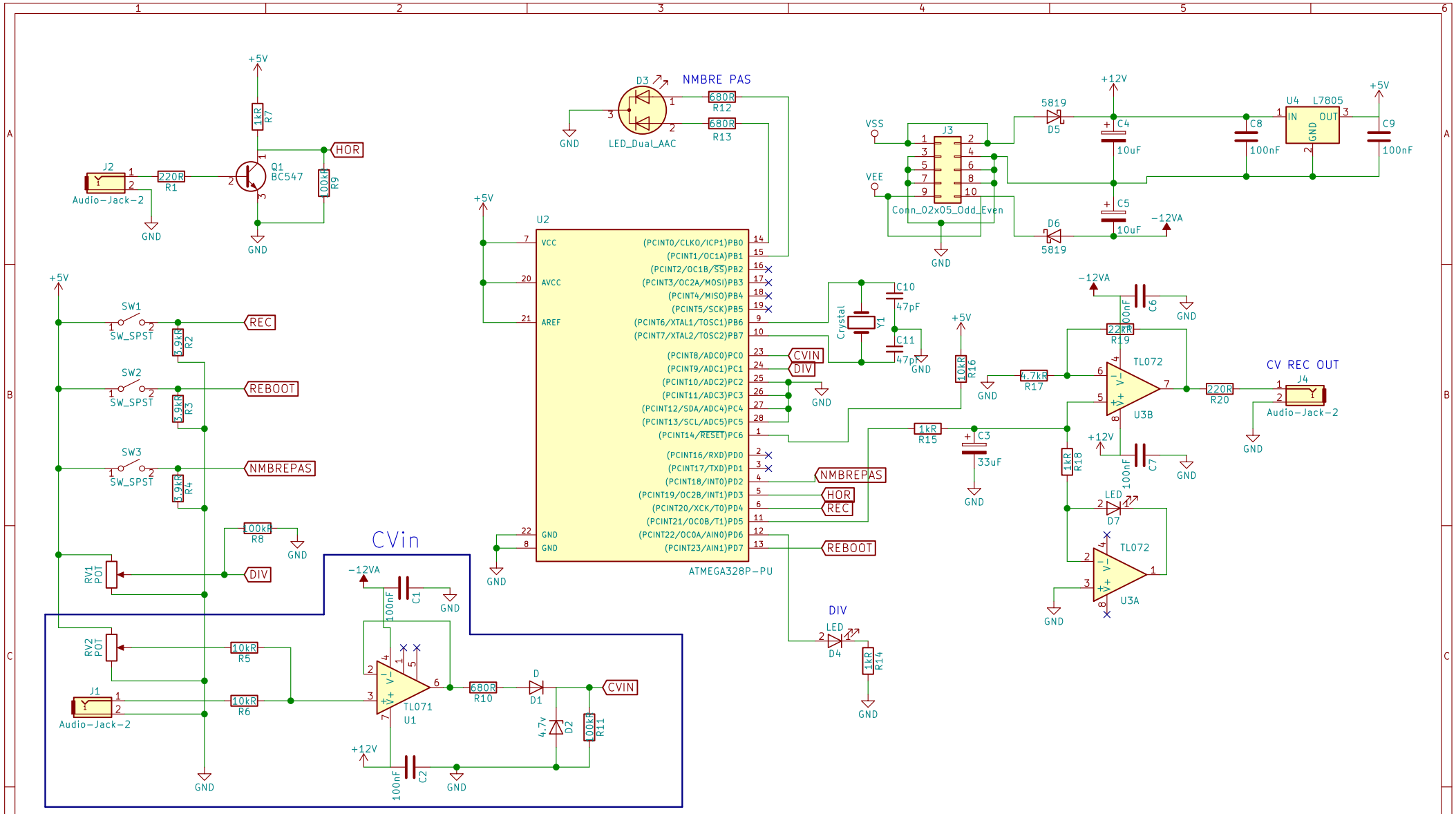
+5V
1kR R7
HOR
J2
Audio-Jack-2
220R R1
Q1 BC547
100kR R9
GND
D3
NMBRE PAS
680R R12
680R R13
LED_Dual_AAC
VSS
VEE
J3
Conn_02x05_Odd_Even
+12V
5819 D5
C4 10uF
C5 10uF
D6 5819
-12VA
U4 L7805
IN OUT GND
C8 100nF
C9 100nF
U2
ATMEGA328P-PU
VCC
AVCC
AREF
GND
(PCINT0/CLKO/ICP1)PB0
(PCINT1/OC1A)PB1
(PCINT2/OC1B/SS)PB2
(PCINT3/OC2A/MOSI)PB3
(PCINT4/MISO)PB4
(PCINT5/SCK)PB5
(PCINT6/XTAL1/TOSC1)PB6
(PCINT7/XTAL2/TOSC2)PB7
(PCINT8/ADC0)PC0
(PCINT9/ADC1)PC1
(PCINT10/ADC2)PC2
(PCINT11/ADC3)PC3
(PCINT12/SDA/ADC4)PC4
(PCINT13/SCL/ADC5)PC5
(PCINT14/RESET)PC6
(PCINT16/RXD)PD0
(PCINT17/TXD)PD1
(PCINT18/INT0)PD2
(PCINT19/OC2B/INT1)PD3
(PCINT20/XCK/T0)PD4
(PCINT21/OC0B/T1)PD5
(PCINT22/OC0A/AIN0)PD6
(PCINT23/AIN1)PD7
CVIN
DIV
NMBREPAS
HOR
REC
REBOOT
Crystal Y1
C10 47pF
C11 47pF
SW1 SW_SPST
SW2 SW_SPST
SW3 SW_SPST
5.9kR R2
5.9kR R3
5.9kR R4
100kR R8
RV1 POT
RV2 POT
10kR R5
10kR R6
J1
Audio-Jack-2
CVin
C1 100nF
C2 100nF
TL071 U1
680R R10
D D1
4.7v D2
100kR R11
10kR R16
1kR R15
C3 33uF
4.7kR R17
22kR R19
C6 100nF
TL072 U3B
220R R20
CV REC OUT
J4
Audio-Jack-2
1kR R18
C7 100nF
LED D7
TL072 U3A
LED D4
1kR R14
Yliader
Sheet: /
File: Taliesin rec.sch
Title: Taliesin rec
Size: A4
Date: 2019-03-28
Rev: 1.0
KiCad E.D.A. kicad 4.0.7
Id: 1/1