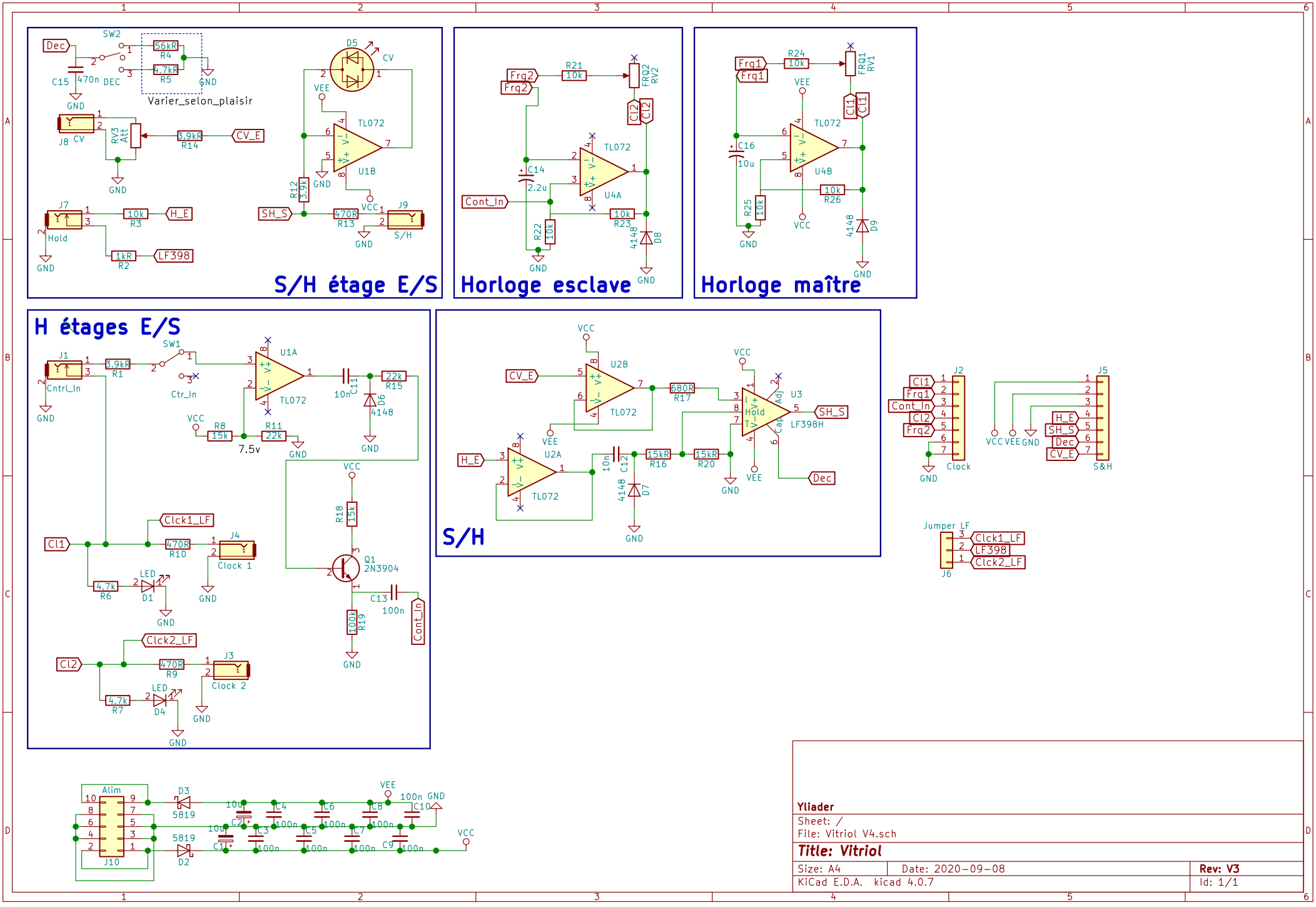

Yliader

Sheet: /

File: Vitriol V4.sch

Title: Vitriol

Size: A4	Date: 2020-09-08	Rev: V3
KiCad E.D.A. kicad 4.0.7		Id: 1/1