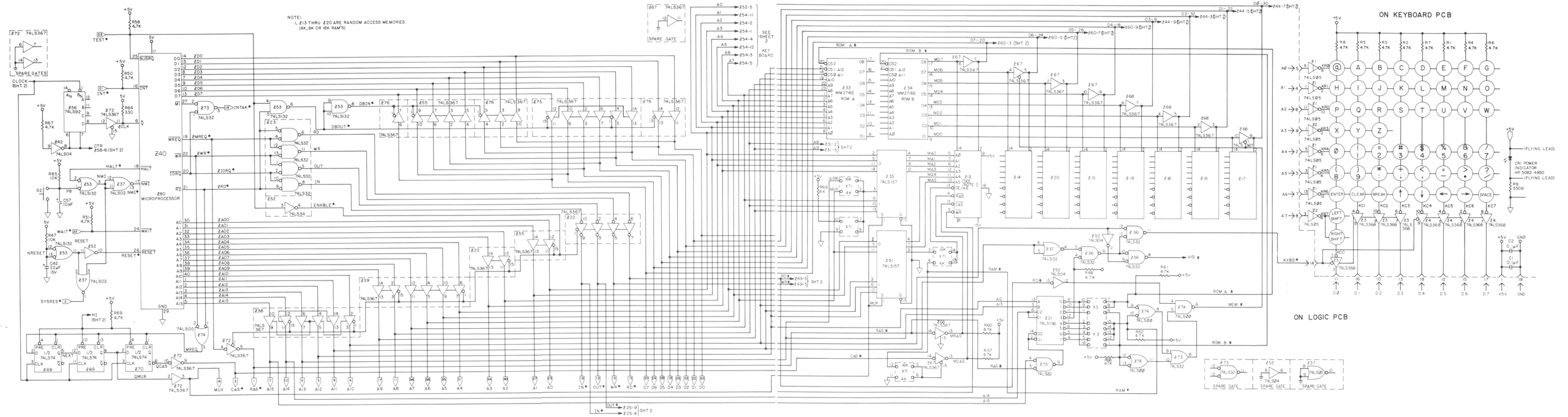

Figure 17. TRS-80 Schematic (Sheet 1)

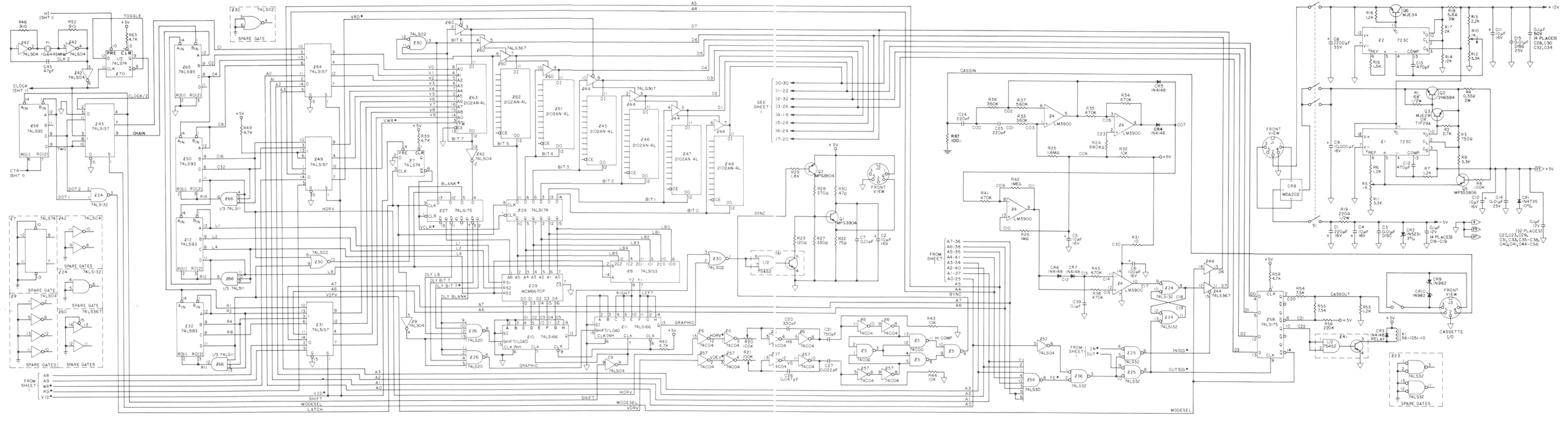

Figure 17. TRS-80 Schematic (Sheet 2)