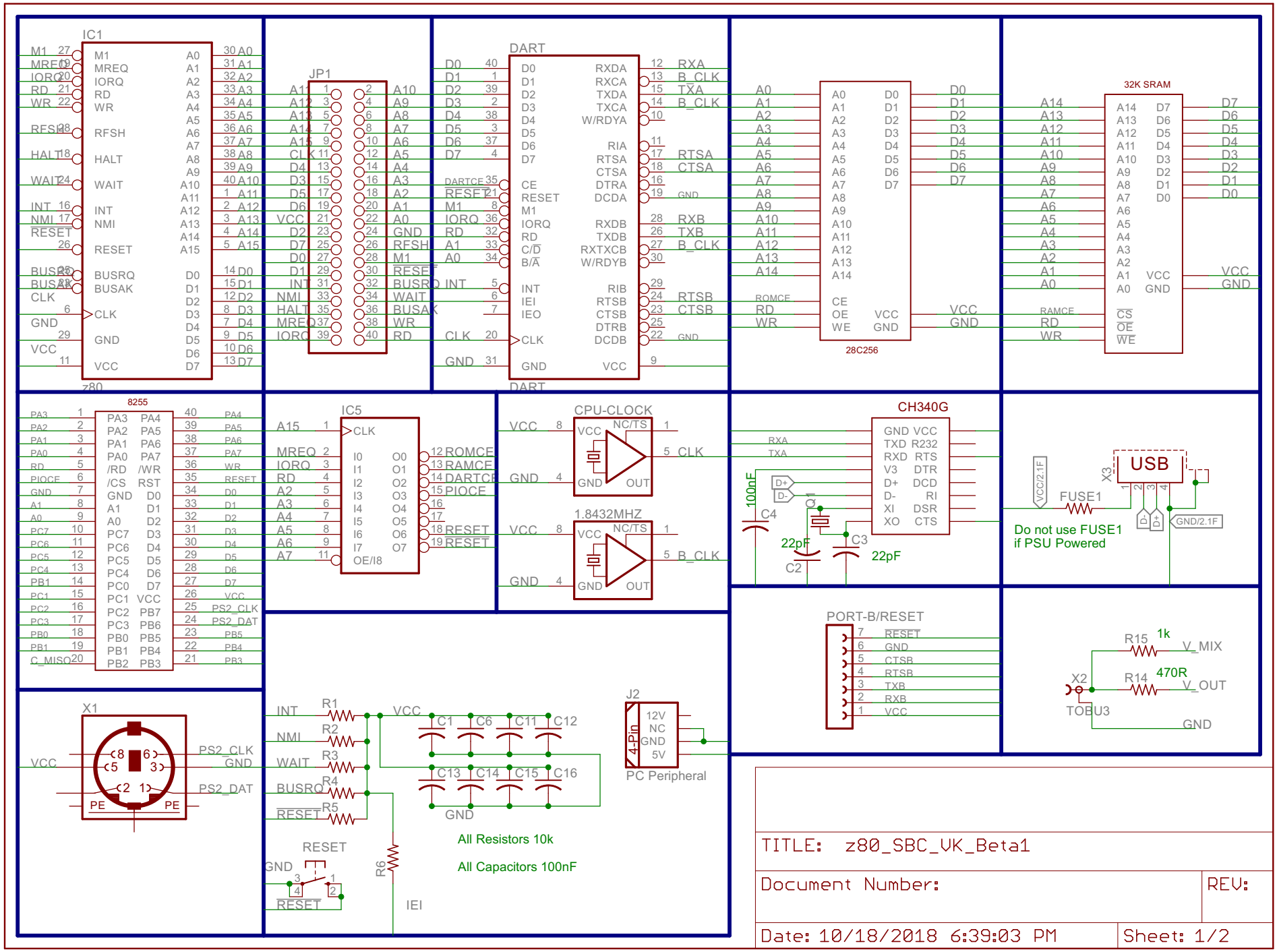
IC1
z80
JP1
DART
28C256
32K SRAM
8255
IC5
CPU-CLOCK
1.8432MHZ
CH340G
USB
FUSE1
Do not use FUSE1
if PSU Powered
PORT-B/RESET
TOBU3
X1
PC Peripheral
All Resistors 10k
All Capacitors 100nF
TITLE: z80_SBC_VK_Beta1
Document Number:
REV:
Date: 10/18/2018 6:39:03 PM
Sheet: 1/2

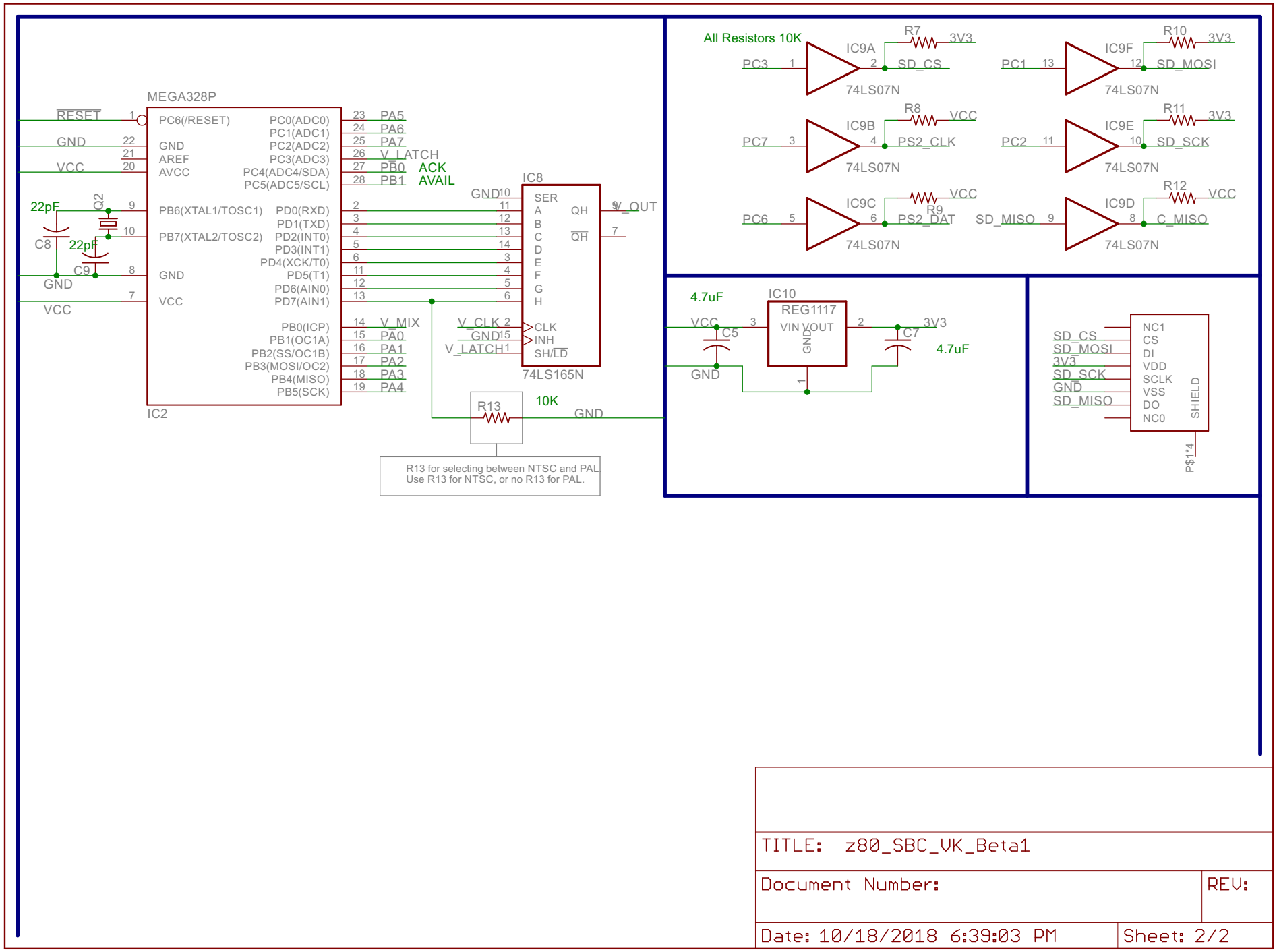

TITLE: z80_SBC_VK_Beta1

Document Number:

REV:

Date: 10/18/2018 6:39:03 PM

Sheet: 2/2