AMENDMENTS TO ENGINE CATALOGUE IN MONTH OF NOVEMBER 2016

SR NO	GROUP	SUBGROUP	DIAGRAM NO	PAGE NO IN CAT.	SR NO IN CAT.	DESCRIPTION	DATE OF UPDATE	REVISION
1	ENGINE	MOUNTING PARTS FOR ALTERNATOR 2 VCR (BUS)	101	102	ALL	NEW DIAGRAM & PART NO FOR 2 VCR BUS ALTERNATOR	04.10.2016	01/10/16

ENGINE

CONTENTS

SR	DESCRIPTION	DIAGRAM NO.
A	**ENGINE BSII & BSIII WITH 2VCR, VP44 & VE6 FIP**	**001 TO 109**
1	180 HP BS III ENGINE	
2	280 HP BS III ENGINE WITH VP44 FIP	
3	280 HP BS III ENGINE 2VCR	
4	220 HP BS II ENGINE	
5	220 HP BS III ENGINE WITH VP44 FIP	
6	220 HP BS III ENGINE WITH VE6 FIP	
7	230 HP BS III ENGINE 2VCR	
B	**ENGINE BS IV WITH 4VCR**	**110 TO 164**
8	300 HP BS IV ENGINE 4VCR	

180, 220, 230 & 280 HP BS II & BS III ENGINES

ENGINE ASSEMBLY **Diagram No. 01**

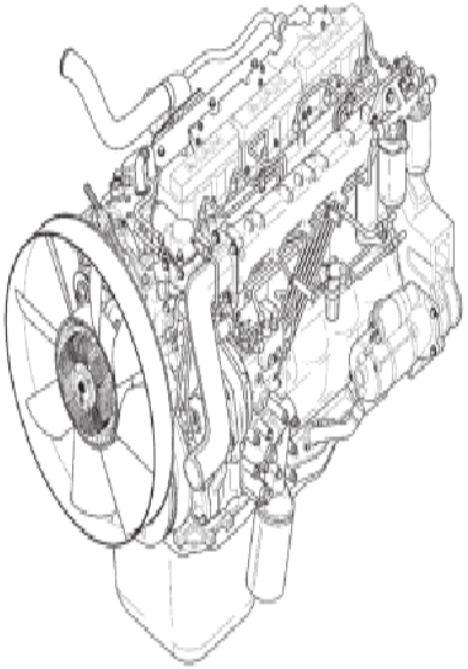

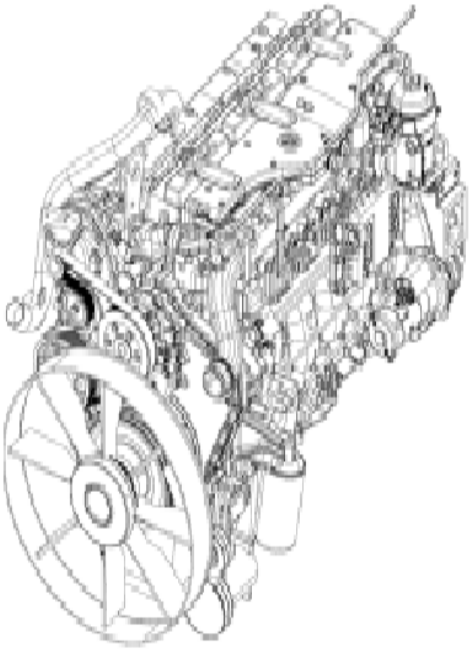

ENGINE ASSEMBLY Diagram No. 01

SR	PART NO.	DESCRIPTION	QTY	APPLICABLE MODEL	REMARKS
1	64.00010-4001	D0834LFL07 ENGINE 180 HP	1	25.180 HL.16.180 FIRE TENDER	4 CYLINDER180 HP BS III ENGINE WITH VP 44 FIP.
1	64.00010-4008	D0834LFL07 BSIII ENGINE FOR AC	1	25.180 HL WITH AC	
1	64.00010-4002	D0836LFL08 ENGINE 280HP	1	25.280 TP (ONROAD & MINING), 49.280 TR, 40.280 TR & 31.280 TP (ONROAD & MINING)	280 HP BS III ENGINE WITH VP 44 FIP
1	64.00010-4006	D0836LFL08 BS-III ENGINE -RMC (DOMESTIC)	1	25.280 RMC WITH VP44 FIP & WITH AC	
1	64.00010-6020	D0836LFL08 ENGINE W SAE2 (8043) -RMC(AC)	1	25.280 RMC BS III WITH VP44 FIP & WITH AC	
1	64.00010-6028	D0836LFL08 ENGINE (8046) FOR DS10 AC	1	31.280 TP BS III WITH VP44 FIP & WITH AC	
1	64.00010-6029	D0836LFL08 ENGINE (8046) FOR DS11	1	31.280 RMC BS III WITH VP44 FIP & W/O AC	
1	64.00010-6041	D0836LFL08 ENGINE (8046) FOR DS10	1	31.280 TP BS III WITH VP44 FIP & W/O AC	
1	64.00010-6052	D0836LFL08 ENGINE (8046) FOR DS11 AC	1	31.280 RMC BS III WITH VP44 FIP & WITH AC	
1	64.00010-6008	D0836LFL10 ENGINE SAE 2 220 HP	1	16.220 TP, 31.220 HL ,25.220 HL & 40.220 TR	220 BS II ENGINE WITH VE 6 FIP.
1	64.00010-4004	D0836LFL10 ENGINE WITH SAE1 220 HP	1	25.220 TP (DS 23)	220 BS II ENGINE WITH VE 6 FIP.
1	64.00010-4004	D0836LFL10 WITH SAE1 EURO-II ENGINE	1	25.220 TP BS II W/O AC	
1	64.00010-6014	D0836LFL10 BSII ENGINE (AC)	1	16.220 TP BS II & WITH AC	
1	64.00010-6015	D0836LFL10 WITH SAE1 EURO-II ENGINE AC	1	40.220 TR BS II & WITH AC	
1	64.00010-6027	D0836LFL10 WITH SAE1 EURO-II ENGINE AC	1	25.220 TP BS II & WITH AC	
1	64.00010-6031	D0836LFL10 ENGINE (8046) FOR DS12	1	31.220 HL BS II & W/O AC	
1	64.00010-6043	D0836LFL10 BSII ENGINE	1	16.220 RMC BS II & W/O AC	

1	64.00010-6046	D0836LFL10 BSII ENGINE FOR HAULAGE	1	25.220 HL BS II & W/O AC	
1	64.00010-6047	D0836LFL10 BSII ENGINE FOR HAULAGE AC	1	25.220 HL BS II & WITH AC	
1	64.00010-6051	D0836LFL10 WITH SAE1 EURO-II ENGINE	1	40.220 TR BS II & W/O AC	
1	64.00010-6049	D0836LFL13 ENGINE 280 HP	1	25.280 TP (ON ROAD), 40.280 & 49.280 TR WITH 2VCR ENGINE W/O AC	2VCR 280 HP BS III ENGINE
1	64.00010-6054	D0836LFL13 ENGINE 280HP	1	25.280 TP (MINING), 40.280 & 49.280 TR WITH 2VCR ENGINE WITH AC	2VCR 280 HP BS III AC ENGINE
1	64.00010-6055	D0836LFL13 ENGINE 280HP	1	31.280 TP(ON ROAD) WITH 2VCR ENGINE WITH AC	2VCR 280 HP BS III ENGINE
1	64.00010-6079	D0836LFL13 ENGINE W SAE2 EPTO ENGINE	1	25.280 RMC WITH 2 VCR ENGINE & W/O AC	
1	64.00010-6083	D0836LFL13 2VCR BSIII ENGINE (8046)	1	31.280 TP WITH 2VCR ENGINE W/O AC	
1	64.00010-6084	D0836LFL13 ENGINE (8046) FOR DS11 AC	1	31.280 RMC WITH 2VCR ENGINE WITH AC	
1	64.00010-6085	D0836LFL13 ENGINE (8046) FOR DS11	1	31.280 RMC WITH 2VCR ENGINE W/O AC	
1	64.00010-6088	D0836LFL13 ENGINE W SAE2 (8043) -RMC AC	1	25.280 RMC WITH 2VCR ENGINE WITH AC	
1	64.00010-6034	D0836LFL16 ENGINE WITH SAE-1	1	25.220 TP (ON ROAD) , 40.220 TR	220 HP ENGINE WITH VP 44 FIP
1	64.00010-6033	D0836LFL16 ENGINE 220 HP	1	16.220 TP & 25.220 HL BS III WITH VP44 FIP W/O AC	220 HP BS III ENGINE WITH VP 44 FIP
1	64.00010-6038	D0836LFL16 ENGINE W SAE-2 FOR AC (TRUCK)	1	16.220 TP & 25.220 HL BS III WITH VP44 FIP & WITH AC	
1	64.00010-6039	D0836LFL16 ENGINE W SAE-1 FOR AC (TRUCK)	1	25.220 TP & 40.220 TR BS III WITH VP44 FIP & WITH AC	
1	64.00010-6040	D0836LFL16 ENGINE W SAE-1 (8046) - DS12	1	31.220 HL BS III WITH VP44 FIP & W/O AC	
1	64.00010-6053	D0836LFL16 ENGINE W SAE1(8046) -DS12 AC	1	31.220 HL BS III WITH VP44 FIP & WITH AC	
1	64.00010-6059	D0836LFL16 ENGINE W HEATER CONNECTION	1	16.220 RMC BS III WITH VP44 FIP & NON AC	

1	64.00010-6082	D0836LFL16 BSIII SAE2 ENGINE -RMC	1	25.220 RMC BS III WITH VP44 FIP & W/O AC	
1	64.00010-6132	D0836LFL16 ENGINE W EPTO	1	25.220 TP BS III WITH VE6 FIP & W/O AC	
1	64.00010-6120	D0836LFL18 ENGINE 220 HP	1	25.220 TP (DS 47)	220 BS III ENGINE WITH VE 6 FIP.CUT OFF : FITTED AFTER VIN 13235
1	64.00010-6090	D0836LFL18 ENGINE 220 HP	1	16.220 TP BS III WITH VE6 FIP W/O AC	220 BS III ENGINE WITH VE 6 FIP.CUT OFF : FITTED AFTER VIN NO : 13235
1	64.00010-6091	D0836LFL18 ENGINE 220 HP AC	1	16.220 TP BS III WITH VE6 FIP WITH AC	220 BS III ENGINE WITH VE 6 FIP. CUT OFF:FITTED AFTER VIN NO :13235
1	64.00010-6095	D0836LFL18 BSIII SAE1 ENGINE	1	40.220 & 49.220 TR BS III WITH VE6 FIP & WITH AC	220 BS III ENGINE WITH VE 6 FIP. CUT OFF:FITTED AFTER VIN NO :13235
1	64.00010-6121	D0836LFL18 BSIII SAE2 ENGINE	1	31.220 HL	220 BS III ENGINE WITH VE 6 FIP. CUT OFF:FITTED AFTER VIN NO :13235
1	64.00010-6131	D0836LFL18 BSIII SAE2 ENGINE	1	31.220 HL AC	220 BS III ENGINE WITH VE 6 FIP. CUT OFF:FITTED AFTER VIN NO :MBKMC5BT8EN013235
1	64.00010-6094	D0836LFL18 BSIII SAE1 ENGINE	1	25.220 TP (DS 23) BS III WITH VE6 FIP & W/O AC	
1	64.00010-6093	D0836LFL18 BSIII SAE1 ENGINE - DS23 AC	1	25.220 TP BS III WITH VE6 FIP & WITH AC	
1	64.00010-6094	D0836LFL18 BSIII SAE1 ENGINE - DS07	1	40.220 & 49.220 TR BS III WITH VE6 FIP & W/O AC	
1	64.00010-6096	D0836LFL18 BSIII SAE2 ENGINE - DS09	1	25.220 HL BS III WITH VE6 FIP & W/O AC	
1	64.00010-6097	D0836LFL18 BSIII SAE2 ENGINE - DS09 AC	1	25.220 HL BS III WITH VE6 FIP & WITH AC	
1	64.00010-6098	D0836LFL18 BSIII SAE1 ENGINE - DS12	1	31.220 HL BS III WITH VE6 FIP & W/O AC	
1	64.00010-6099	D0836LFL18 BSIII SAE1 ENGINE - DS12 AC	1	31.220 HL BS III WITH VE6 FIP & WITH AC	

1	64.00010-6134	D0836LFL19 ENGINE WITH SAE2	1	25.230 TP WITH 2VCR ENGINE SAE2 & W/O AC	
1	64.00010-6135	D0836LFL19 ENGINE WITH SAE2 AC	1	25.230 TP WITH 2VCR ENGINE SAE2 & WITH AC	
1	64.00010-6138	D0836LFL19 ENGINE WITH SAE2 FOR DS48	1	31.230 HL WITH 2VCR ENGINE & W/O AC	
1	64.00010-6139	D0836LFL19 ENGINE WITH SAE2 AC FOR DS48	1	31.230 HL WITH 2VCR ENGINE & WITH AC	
1	64.00010-6140	D0836LFL19 ENGINE WITH SAE2 EPTO	1	25.230 RMC WITH 2VCR ENGINE & W/O AC	
1	64.00010-6141	D0836LFL19 ENGINE WITH SAE2 EPTO AC	1	25.230 RMC WITH 2VCR ENGINE & WITH AC	
1	64.00010-6144	D0836LFL19 ENGINE WITH SAE1	1	25.230 TP WITH 2VCR ENGINE SAE1& W/O AC	
1	64.00010-6145	D0836LFL19 ENGINE WITH SAE1 AC	1	25.230 TP WITH 2VCR ENGINE SAE1& WITH AC	
1	64.00010-6103	D0836LFL20 ENGINE WITH SAE1 AC	1	25.300 TP WITH 300HP BS IV SAE1 ENGINES ONLY	
	BARE ENGINE & HALF ENGINE				
1	64.00010-6159	D0836LFL08 BARE ENGINE	1	FOR 280HP BSIII ENGINES WITH VP44 FIP ONLY	
2	64.00010-6160	D0836LFL08 HALF ENGINE	1	FOR 280HP BSIII ENGINES WITH VP44 FIP ONLY	
3	64.00010-6153	D0836LFL13 BARE ENGINE	1	FOR 2VCR ENGINES ONLY	
4	64.00010-6154	D0836LFL13 HALF ENGINE	1	FOR 2VCR ENGINES ONLY	
5	64.00010-6157	D0836LFL18 BARE ENGINE	1	FOR 220HP BSIII ENGINES WITH VE6 FIP ONLY	
6	64.00010-6158	D0836LFL18 HALF ENGINE	1	FOR 220HP BSIII ENGINES WITH VE6 FIP ONLY	

CRANKCASE 6 CYLINDER ENGINE **Diagram No. 02**

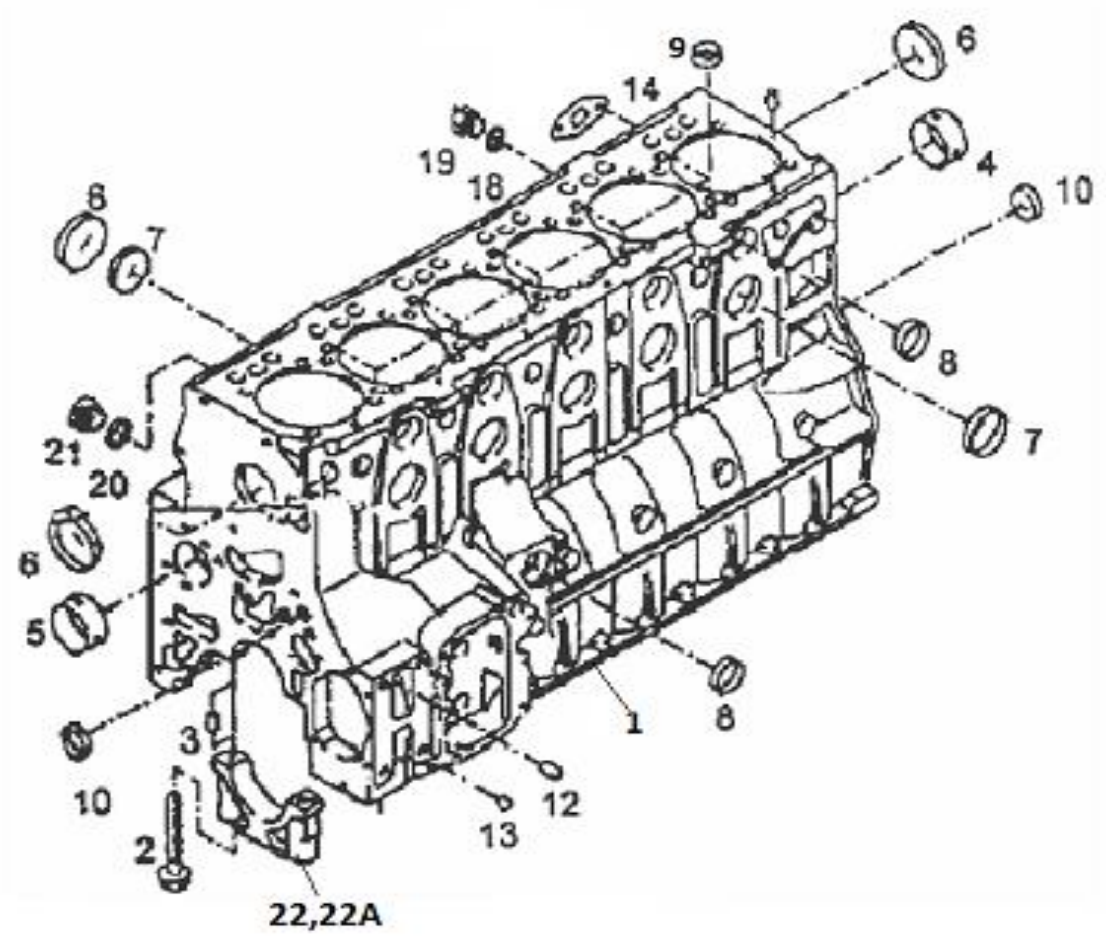

CRANKCASE 6 CYLINDER ENGINE

Diagram No. 02

SR	PART NO.	DESCRIPTION	QTY	APPLICABLE MODEL	REMARKS
1	64.01102-4002	CYLINDER BLOCK ASSLY D0836	1	PART NOT USED	SUPERCEDED BY 64.01102-6517
1	64.01102-6517	CYLINDER BLOCK ASSLY D0836	1	COMMON FOR ALL ENGINES EXCEPT 180 HP ENGINES	SUPERCEDED BY 64.01102-6531
2	64.90020-0003	HEX HD COLLER SCREW	14	COMMON FOR ALL MODELS. ONLY QTY DIFFERENCE FOR 4 & 6 CYLINDER ENGINES	SUPERCEDED BY 64.90020-0602
3	64.91301-0005	CYLINDRICAL PIN	6	COMMON FOR ALL MODELS	ONLY QTY DIFFERENCE FOR 4 & 6 CYLINDER ENGINES
4	64.04401-0002	CAM SHAFT BEARING BUSH	6	COMMON FOR ALL MODELS	ONLY QTY DIFFERENCE FOR 4 & 6 CYLINDER ENGINES
5	64.04410-1002	CAM SHAFT BEARING BUSH	1	COMMON FOR ALL MODELS	ONLY QTY DIFFERENCE FOR 4 & 6 CYLINDER ENGINES
6	64.91606-0005	SEALING CAP DIA 62.15	8	COMMON FOR ALL MODELS	ONLY QTY DIFFERENCE FOR 4 & 6 CYLINDER ENGINES
7	64.91606-0004	SEALING CAP DIA 50.15	11	COMMON FOR ALL MODELS	ONLY QTY DIFFERENCE FOR 4 & 6 CYLINDER ENGINES
8	64.91606-0002	SEALING CAP DIA 40.15	6	COMMON FOR ALL MODELS	ONLY QTY DIFFERENCE FOR 4 & 6 CYLINDER ENGINES
9	64.91606-0006	SEALING CAP B16 X5CRNI 1810	10	COMMON FOR ALL MODELS	ONLY QTY DIFFERENCE FOR 4 & 6 CYLINDER ENGINES
10	64.91606-0007	SEALING CAP B20 X5CRNI 1810	3	COMMON FOR ALL MODELS	ONLY QTY DIFFERENCE FOR 4 & 6 CYLINDER ENGINES
12	64.90490-0060	SEALING PLUG G8 M655 (AVSEAL-II)	1	COMMON FOR ALL MODELS	
13	64.96481-0003	BALL 6.35G20P2 DIN 5401	1	COMMON FOR ALL MODELS	
14	64.96601-0001	GASKET (TURBO DRAIN PIPE)	1	COMMON FOR ALL MODELS	
18	64.96501-0047	SEALING WASHER BS-14,7X22,0-ST FPM1-80	1		
19	64.90490-0041	LOCKING BOLT A-M14X1.5-ST-A3C DIN 7604	1	COMMON FOR MODLES WITH 180 HP ENGINES ONLY	

20	06.56631-0114	SEALING WASHER BS-31X39-ST FPM1-80	2	COMMON FOR ALL MODELS	
21	64.90490-0036	LOCKING SCREW M30X1.5-ST ZNPHR3F DIN 908	2	COMMON FOR ALL MODELS	
22	64.01105-1001	BEARING CAP FOR CRANKCASE	6	COMMON FOR ALL MODELS	ONLY QTY DIFFERENCE FOR 4 & 6 CYLINDER ENGINES
22A	64.01105-1002	BEARING CAP FOR CRANK CASE	1	COMMON FOR ALL MODELS	
Page No. 02		**REVISION NO. 01/07/16**			**VERSION: 001**

CRANKCASE 4 CYLINDER ENGINE **Diagram No. 03**

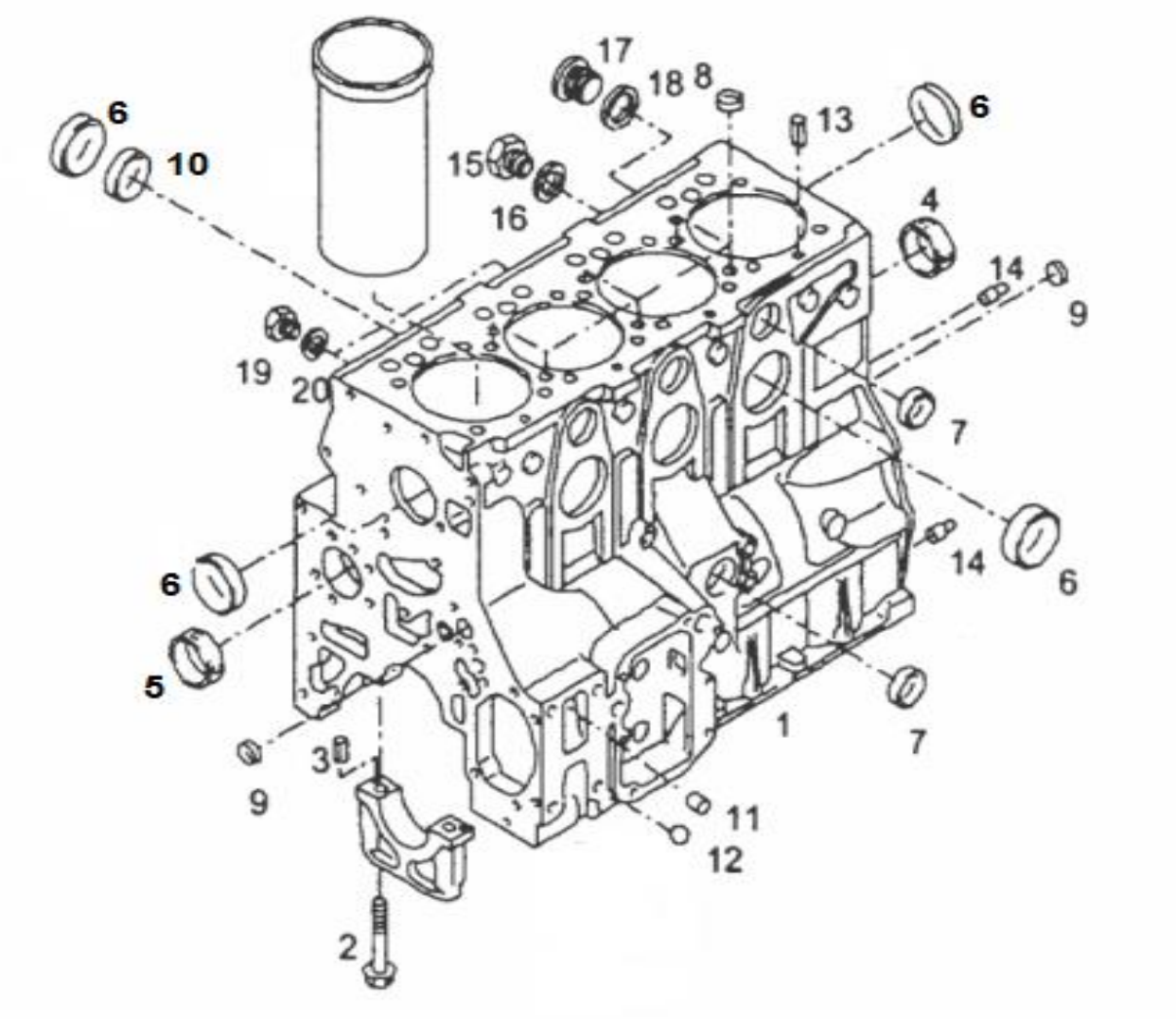

CRANKCASE 4 CYLINDER ENGINE

Diagram No. 03

SR	PART NO.	DESCRIPTION	QTY	APPLICABLE MODEL	REMARKS
1	64.01101-5001	CYLINDER BLOCK ASSLY D0834	1	COMMON FOR MODELS WITH 180 HP ENGINES ONLY	
2	64.90020-0003	HEX HD COLLER SCREW	14	COMMON FOR ALL MODELS.ONLY QTY DIFFERENCE FOR 4 & 6 CYLINDER ENGINES	SUPERCEDED BY 64.90020-0602
3	64.91301-0005	CYLINDRICAL PIN	6	COMMON FOR ALL MODELS	ONLY QTY DIFFERENCE FOR 4 & 6 CYLINDER ENGINES
4	64.04401-0002	CAM SHAFT BEARING BUSH	4	COMMON FOR ALL MODELS	ONLY QTY DIFFERENCE FOR 4 & 6 CYLINDER ENGINES
5	64.04410-1002	CAM SHAFT BEARING BUSH	1	COMMON FOR ALL MODELS	ONLY QTY DIFFERENCE FOR 4 & 6 CYLINDER ENGINES
6	64.91606-0005	SEALING CAP DIA 62.15	6	COMMON FOR ALL MODELS	ONLY QTY DIFFERENCE FOR 4 & 6 CYLINDER ENGINES
7	64.91606-0004	SEALING CAP DIA 50.15	7	COMMON FOR ALL MODELS	ONLY QTY DIFFERENCE FOR 4 & 6 CYLINDER ENGINES
8	64.91606-0002	SEALING CAP DIA 40.15	4		
9	64.91606-0006	SEALING CAP B16 X5CRNI 1810 DIN 443	6		
10	64.91606-0007	SEALING CAP B20 X5CRNI 1810 DIN 443	2		
11	64.90490-0060	SEALING PLUG G8 M655 (AVSEAL-II)	1		
12	64.96481-0003	BALL 6.35G20P2 DIN 5401	1		
14	64.91301-0006	STEPPED CYLINDRICAL PIN	2		
15	64.90490-0041	LOCKING BOLT A-M14X1.5-ST-A3C	1		
16	06.56631-0106	SEALING RING BS-14,7X22,O-ST	1		
17	64.90490-0036	LOCKING SCREW M30X1.5-ST	1		
18	06.56631-0114	SEALING WASHER BS-31X39-	1		

19	64.90490-0041	LOCKING BOLT A-M14X1.5-ST-A3C	1		
20	06.56631-0106	SEALING RING BS-14,7X22,O-ST	1		
Page No. 03		**REVISION NO. 001**			**VERSION: 001**

CYLINDER LINER **Diagram No. 04**

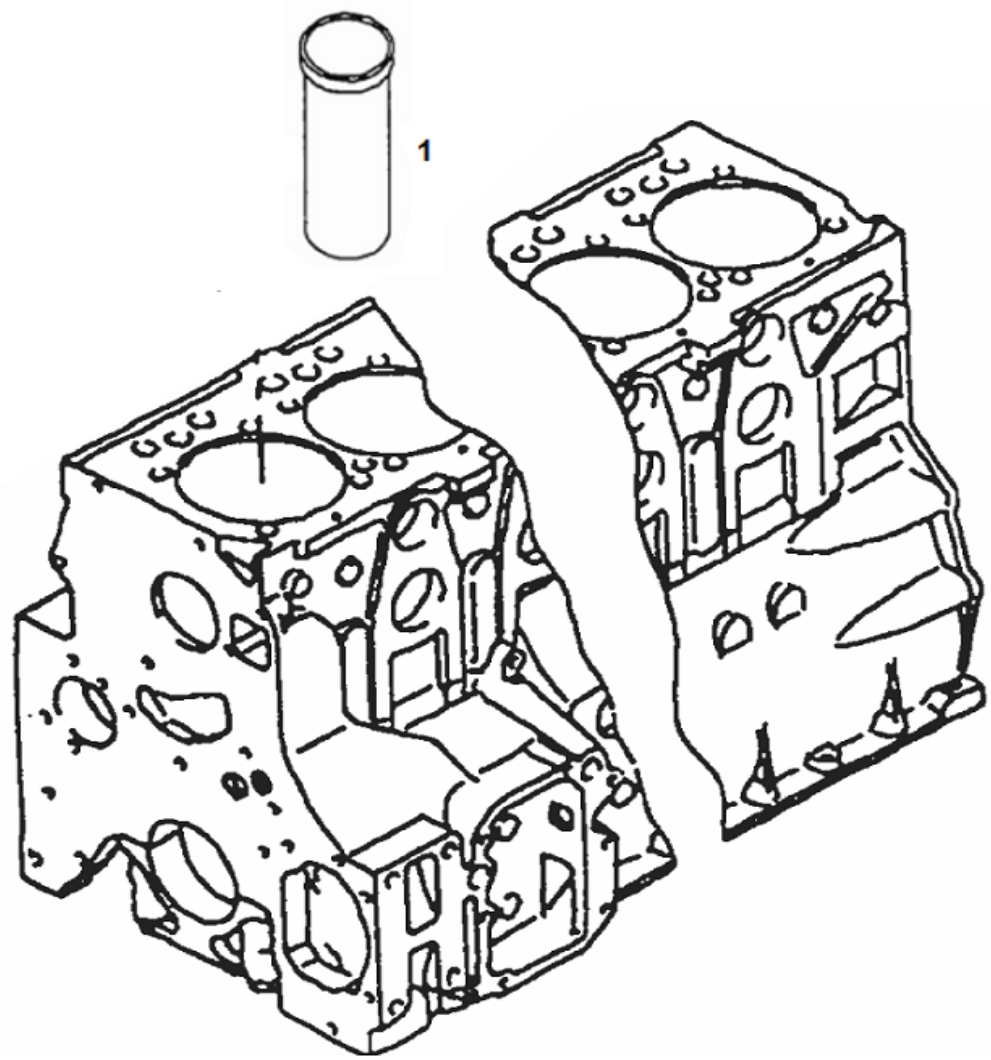

CYLINDER LINER

Diagram No. 04

S R	PART NO.	DESCRIPTION	QTY	APPLICABLE MODEL	REMARKS
1	64.01201-0001	CYLINDER LINER	6	COMMON FOR ALL MODELS	ONLY QTY DIFFERENCE FOR 4 & 6 CYLINDER ENGINES

ENGINE BREATHER **Diagram No. 05**

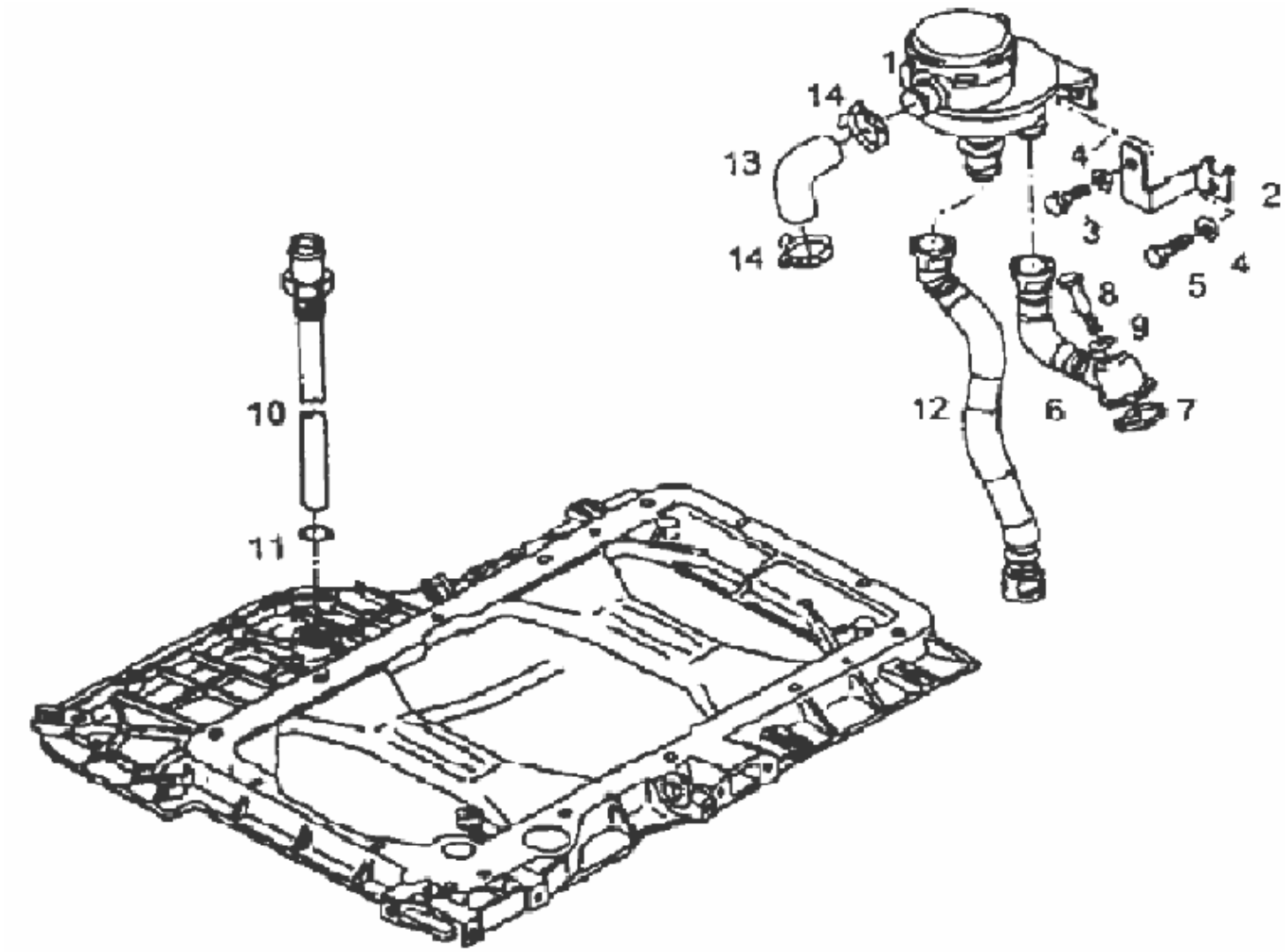

ENGINE BREATHER

Diagram No. 05

S R	PART NO.	DESCRIPTION	QTY	APPLICABLE MODEL	REMARKS
1	64.01804-0001	OIL SEPARATOR WITH PR. RELIEF VALVE	1	COMMON FOR ALL MODELS	51.01804-0017 ALTERNATE
2	64.01840-0003	HOLDER FOR OIL SEPERATOR	1	COMMON FOR 6 CYL ENGINES EXCEPT BS IV ENGINES	
2	64.01840-0002	HOLDER - OIL SEPARATOR	1	COMMON FOR 4 CYL ENGINES ONLY	
3	64.90020-0092	HHS M8X16 DIN 933-8.8	1	COMMON FOR ALL MODELS	
4	64.90710-0026	PL WASHER A8.4 DIN125-ST	2	COMMON FOR ALL MODELS	
5	64.90020-0093	HHS M8 X20 DIN 933-8.8	1	COMMON FOR ALL MODELS	
6	51.01802-5470	BREATHER PIPE	1	COMMON FOR ALL MODELS	64.01802-5001 ALTERNATE
7	64.96501-0032	O RING 32X2.5 B-ACM 1-60	1	COMMON FOR ALL MODELS	06.56332-2167 ALTERNATE
8	64.90020-0301	HEX SCREW M8X85-8.8	1	COMMON FOR 6 CYL ENIGNES ONLY	
8	64.90020-0077	HEX HEAD BOLT M8X85	1	COMMON FOR 4 CYL ENGINES ONLY	
9	06.56631-0125	SEALING RING BS-8.7X14.0	1	COMMON FOR ALL MODELS	
10	64.05702-0002	OIL RETURN PIPE IN OIL SUMP	1	COMMON FOR ALL MODELS	
11	64.96501-0062	O RING 25X2.5-FPM 1-70	1	COMMON FOR ALL MODELS	06.56936-1300 ALTERNATE
12	51.01802-0335	OIL SEPARATOR DRAIN PIPE	1	COMMON FOR ALL MODELS	64.01802-0001 ALTERNATE
13	64.96301-0001	RUBBER ELBOW HOSE	1	COMMON FOR 6 CYL ENGINES ONLY	
13	64.96301-0018	HOSE- INTAKE MANIFOLD	1	COMMON FOR 4 CYL ENGINES ONLY	
14	64.97640-0004	SPRING BAND CLAMP 32X12	2	COMMON FOR ALL MODELS	

FLYWHEEL HOUSING **Diagram No. 06**

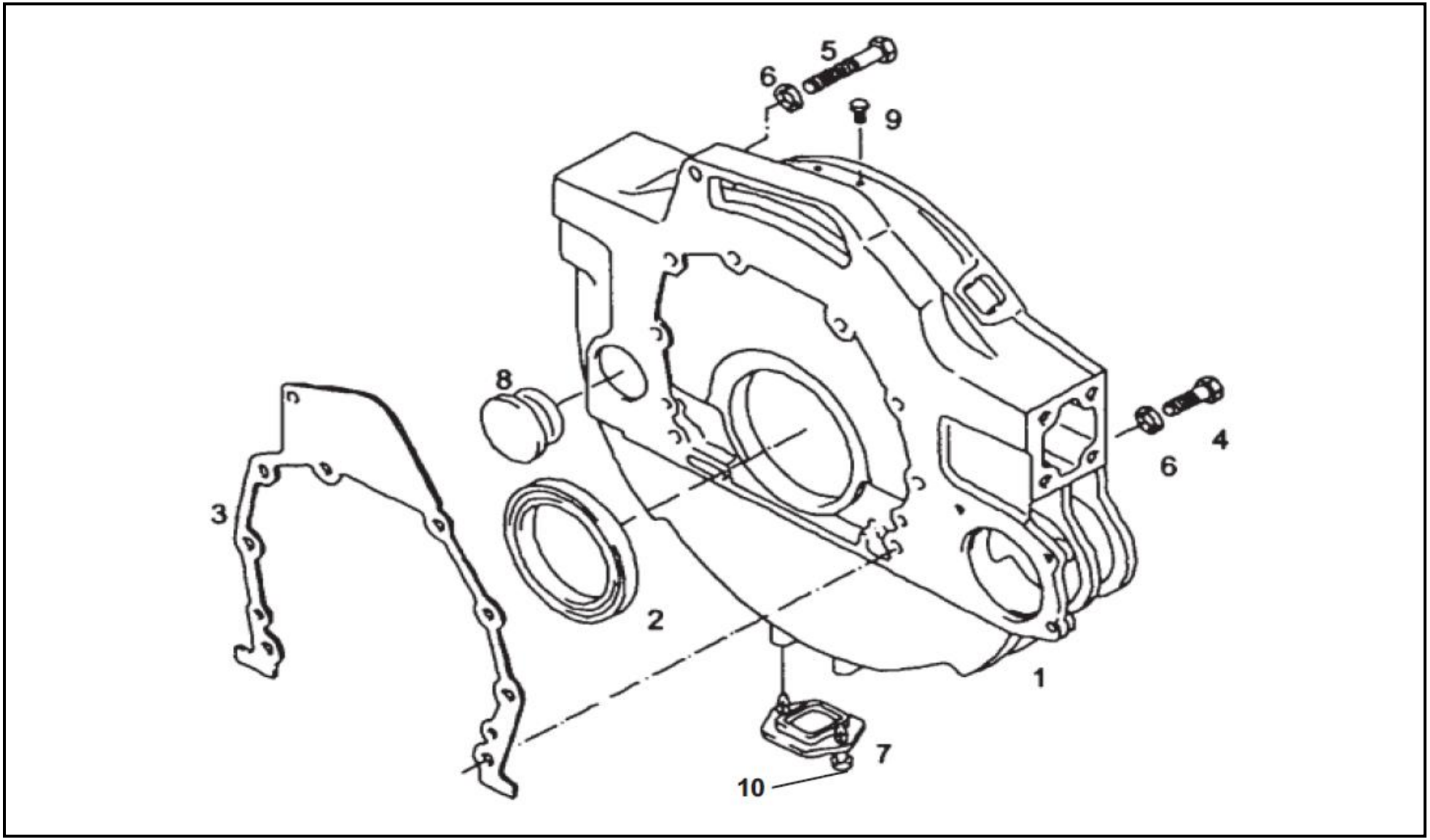

FLYWHEEL HOUSING

Diagram No. 06

SR	PART NO.	DESCRIPTION	QTY	APPLICABLE MODEL	REMARKS
1	64.01401-5003	ASSY FLYWHEEL HOUSING (SAE1)	1	COMMON FOR MODELS WITH 430 DIA CLUTCH	NOT FOR RMC APPLICATION.
1	51.01401-5197	FLYWHEEL HOUSING	1	COMMON FOR 300 HP BS IV ENGINES WITH 430 DIA CLUTCH ONLY	
1	64.01401-5008	FLYWHEEL HOUSING (SAE1) M/C (PDC) 2VCR	1	COMMON FOR MODELS WITH 2 VCR ENGINES & 430 DIA CLUTCH ONLY	NOT FOR 25.280 RMC & 31.280 RMC. SUPERCEDED BY 64.01401-5364
1	51.01401-5304	FLYWHEEL HOUSING SAE2 - (RMC)	1	COMMON FOR RMC APPLICATION (6X4 & 8X4) ONLY	
1	64.01401-5002	FLYWHEEL HOUSING M/C	1	COMMON FOR MODELS WITH 395 DIA CLUTCH & ZF 6S GB	NOT APPLICABLE FOR RMC (6X4 & 8X4)
1	61.01401-0320	FLYWHEEL HOUSING	1	COMMON FOR MODELS WITH 220 HP BSIII (BARI) ENGINES & 230 HP 2VCR ENGINES WITH EATON 6S TRANSMISSION & 16.300 WITH ALLISON TRANSMISSION ONLY.	
2	64.01510-0003	OIL SEAL REAR (FLYWHEEL END)	1	COMMON FOR ALL MODELS	
3	64.01903-0001	GASKET	1	COMMON FOR 25.280 HL , MODELS WITH 220 HP BS II & BS III ENGINES	
3	64.01904-0001	GASKET FOR FLYWHEEL HOUSING	1	COMMON FOR ALL MODELS	
3	51.01904-0010	GASKET FLYWHEEL HOUSING	1	WITH EATON 6S TRANSMISSION & 220 HP BSIII (BARI)ENGINES	
4	64.90020-0108	HHS M12X30 IS1364 PT.II-8.8 BTS170202.22	8	COMMON FOR MODELS WITH SAE2 FLYWHEEL	
4	64.90030-0002	FLANGE BOLT M12X30 DIN6921-10.9 PHR	9	COMMON FOR MODELS WITH SAE1 FLYWHEEL	
5	64.90020-0083	HHB M12X90 IS1364 PT.I-8.8 BTS170102.20	1	COMMON FOR MODELS WITH SAE2 FLYWHEEL	
5	64.90020-0139	HHS M14X105-8.8 MAN183 PHR DIN 931	2	COMMON FOR MODELS WITH SAE1 FLYWHEEL	
6	64.90710-0029	PL WASHER A13 DIN125-ST BTS170202.12	9	COMMON FOR ALL MODELS EXCEPT MODELS WITH 280 HP 2VCR ENGINES	

6	64.90710-0060	PLAIN WASHER A15 DIN125-ST A3C	2	COMMON FOR 2 VCR & 4 VCR ENGINES ONLY	
7	64.91605-0001	SEALING COVER (TIMING CHK.)	2	COMMON FOR ALL MODELS	
8	64.96002-0019	PLUG	1	COMMON FOR ALL MODELS EXCEPT MODELS WITH 280 HP ENGINES (VP 44 & 2 VCR)	ONLY FOR 180 HP, 220 HP BS II & BS III ENGINES
9	64.96002-0045	PLUG 20 X 12	1	COMMON FOR ALL MODELS EXCEPT MODELS WITH 280 HP ENGINES (VP 44 & 2 VCR)	ONLY FOR 180 HP, 220 HP BS II & BS III ENGINES
10	64.90040-0041	SELF TAPPING SCREW ST4.2X16C-A3C DIN6928	2	COMMON FOR ALL MODELS	
Page No. 06		**REVISION NO. 01/05/16**			**VERSION: 001**

MOUNTING FOR TIMING CASE **Diagram No. 07**

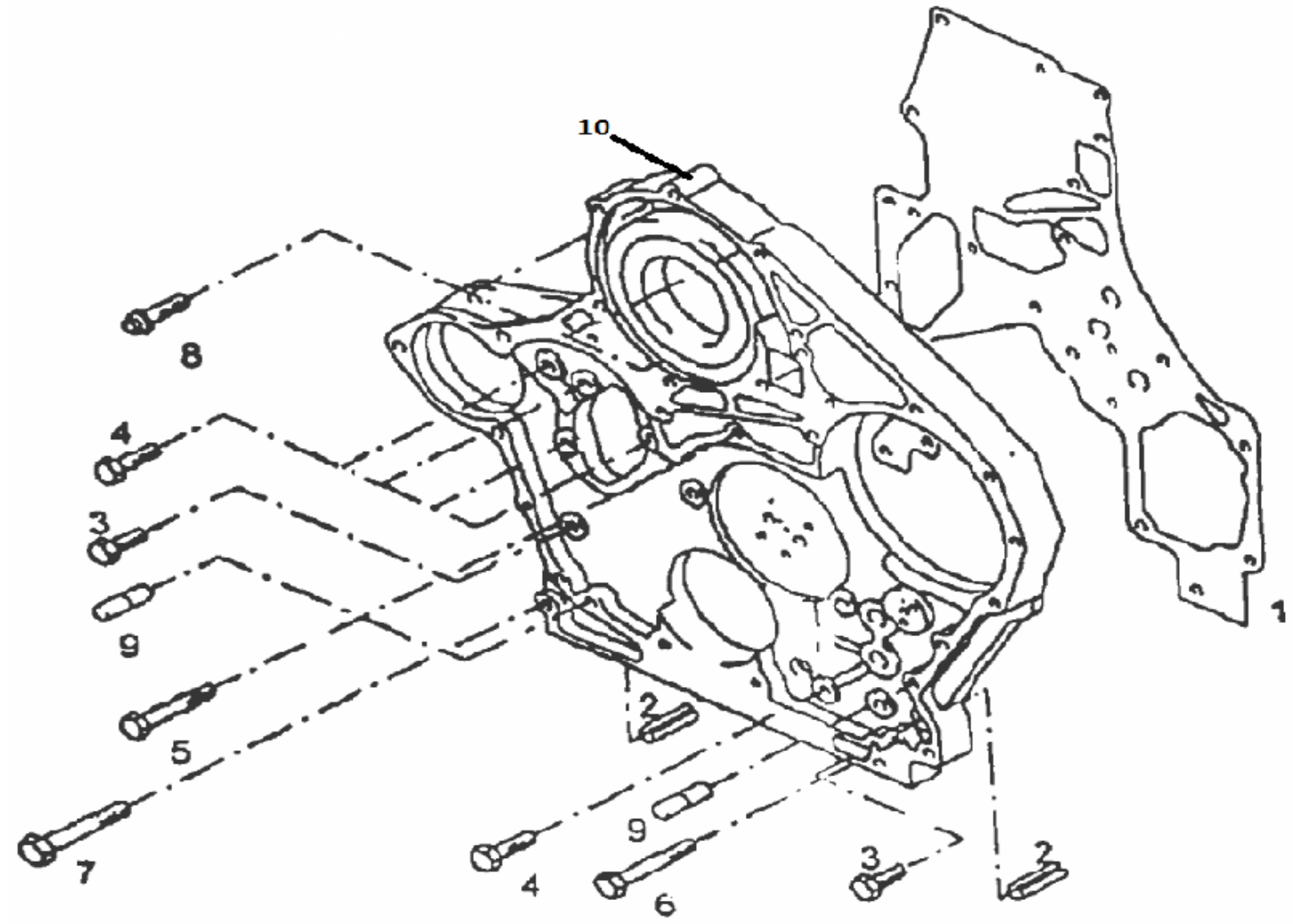

MOUNTING FOR TIMING CASE

Diagram No. 07

S R	PART NO.	DESCRIPTION	QTY	APPLICABLE MODEL	REMARKS
1	64.01903-0002	GASKET- TIMING CASE	1	COMMON FOR ALL MODELS	
2	64.91001-0012	DOWEL PIN 8X16-ST	2	COMMON FOR ALL MODELS	SUPERCEDED BY 51.91301-0112
2	64.90020-0093	HEX HEAD SCREW M8X20	1	COMMON FOR ALL MODELS	NOT USED IN 2 VCR ENGINES.
3	64.90020-0095	HEX HEAD SCREW M8X25	6	COMMON FOR ALL MODELS	NOT USED IN 2 VCR ENGINES
4	64.90020-0093	HEX HEAD SCREW M8X20	1	COMMON FOR ALL MODELS	NOT USED IN 2 VCR ENGINES.
5	64.90020-0095	HEX BOLT M8 X 25	1	COMMON FOR ALL MODELS	
6	64.90020-0095	HEX BOLT M8 X 25	1	COMMON FOR ALL MODELS	
5	64.90020-0100	HEX HEAD SCREW M8X40	1	COMMON FOR ALL MODELS	NOT USED IN 2 VCR ENGINES
6	64.90020-0157	HEX HEAD SCREW M8X45	1	COMMON FOR ALL MODELS	NOT USED IN 2 VCR ENGINES
7	64.90020-0163	HEX HEAD SCREW M10X50	1	COMMON FOR ALL MODELS EXCEPT MODELS WITH 280 HP 2VCR ENGINES	NOT USED IN 2 VCR ENGINES
8	64.90490-0001	SPECIAL BOLT M8X27	3	COMMON FOR ALL MODELS EXCEPT MODELS WITH 280 HP 2VCR ENGINES	NOT USED IN 2 VCR ENGINES
9	64.91301-0001	CYLINDRICAL PIN	2	COMMON FOR ALL MODELS	
10	64.01304-4001	ASSY TIMING GEAR CASE	1	COMMON FOR ALL MODELS EXCEPT MODELS WITH 280 HP 2VCR ENGINES	NOT USED IN 2 VCR ENGINES

TIMING CASE & MOUNTING (2 & 4 VCR)

Diagram No. 08

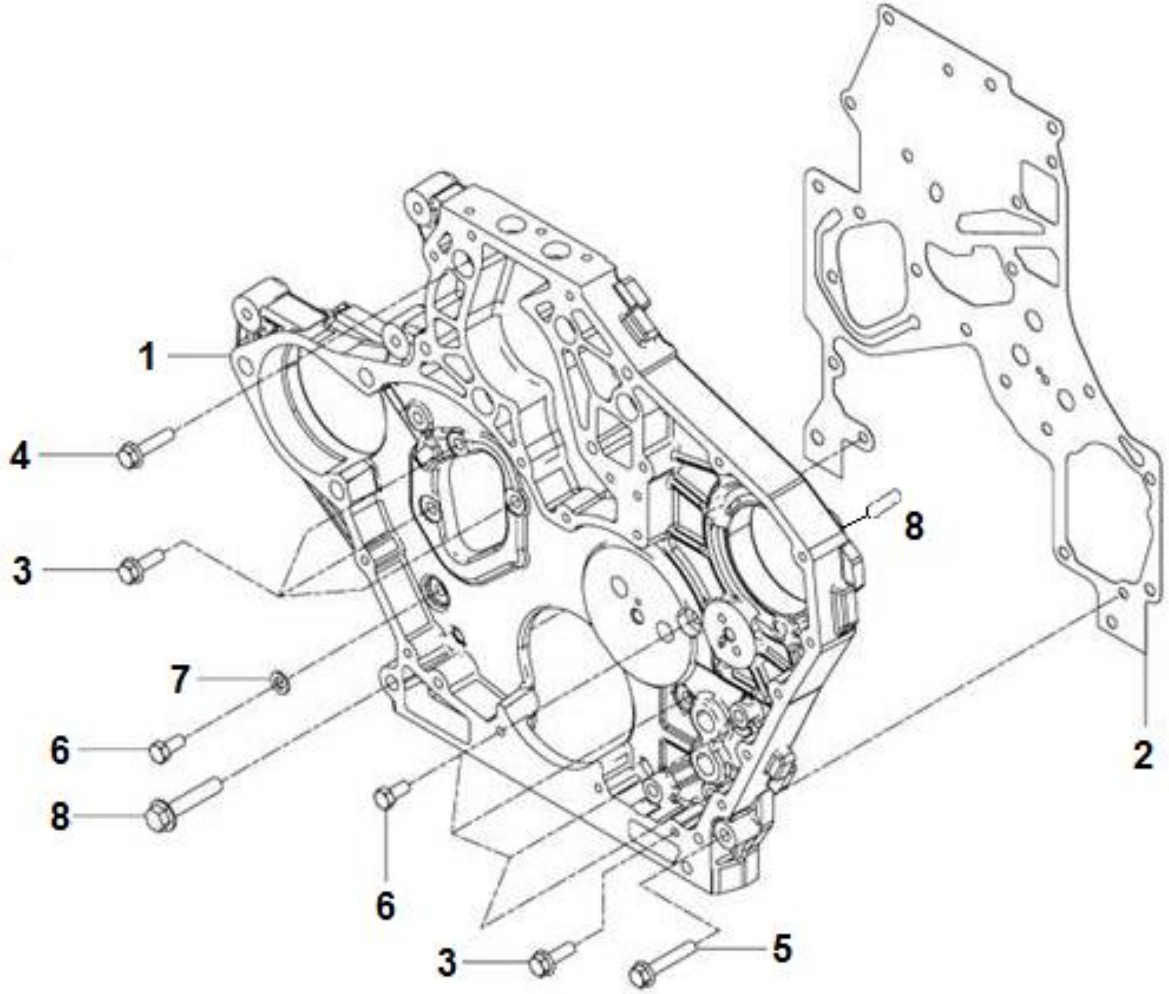

TIMING CASE & MOUNTING (2 & 4 VCR) Diagram No. 08

SR	PART NO.	DESCRIPTION	QTY	APPLICABLE MODEL	REMARKS
1	64.01304-4003	ASSY TIMING GEAR CASE	1	COMMON FOR MODELS WITH 2 & 4 VCR BSIV ENGINES ONLY	ALTERNATE 51.01304-0071
2	64.01903-0002	GASKET- TIMING CASE	1	COMMON FOR ALL ENGINES	
3	64.90030-0049	FLANGE BOLT M8X25-10.9 MAN183-B1 DIN6921	4	COMMON FOR MODELS WITH 2 VCR ENGINES ONLY	
4	64.90030-0048	HEX FLANGE BOLT M8X35	4	COMMON FOR MODELS WITH 2 VCR ENGINES ONLY	
5	64.90030-0051	FLANGE BOLT M8X45-10.9 MAN183-B1 DIN6921	2	COMMON FOR MODELS WITH 2 VCR ENGINES ONLY	
6	64.90020-0398	HEX SCREW M8X18 DIN 933-10.9 PHR	1	COMMON FOR MODELS WITH 2 VCR ENGINES ONLY	
7	64.90710-0077	WASHER 8.4 DIN125-200HV MAN183-B1	1	COMMON FOR 25.180 HL & MODELS WITH 2 VCR ENGINES	
8	64.91001-0012	DOWEL PIN 8X16-ST	2	COMMON FOR ALL MODELS	SUPERCEDED BY 51.91301-0112

OIL SPRAYER NOZZLE **Diagram No. 09**

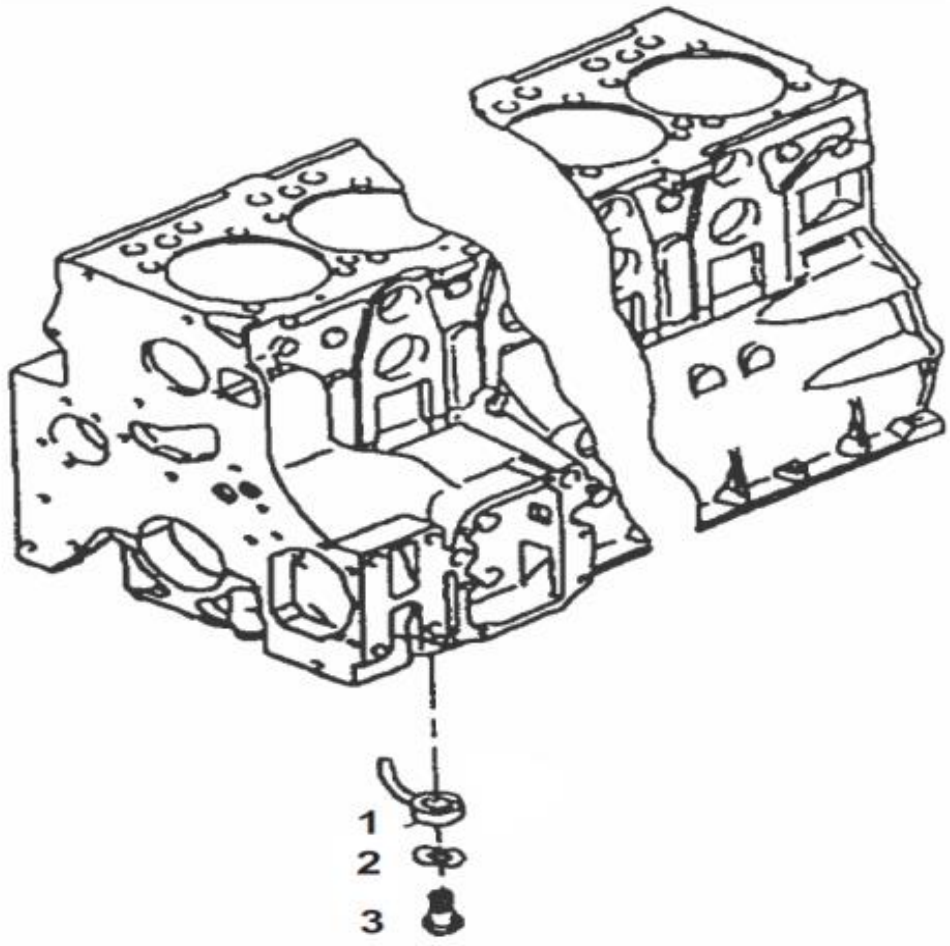

OIL SPRAYER NOZZLE

Diagram No. 09

SR	PART NO.	DESCRIPTION	QTY	APPLICABLE MODEL	REMARKS
1	51.01601-5065	PISTON COOLING NOZZLE ASSY	6	COMMON FOR ALL MODELS EXCEPT 4 VCR ENGINES	ONLY QTY DIFFERENCE FOR 4 & 6 CYLINDER ENGINES
2	64.90801-0009	SPRING WASHER B12-ZNPHR3F	6	COMMON FOR ALL MODELS	ONLY QTY DIFFERENCE FOR 4 & 6 CYLINDER ENGINES
3	64.05405-5001	OIL PRESSURE VALVE D02/D08	6	COMMON FOR ALL MODELS	ONLY QTY DIFFERENCE FOR 4 & 6 CYLINDER ENGINES

TIMING GEARS (2 & 4 VCR) **Diagram No. 10**

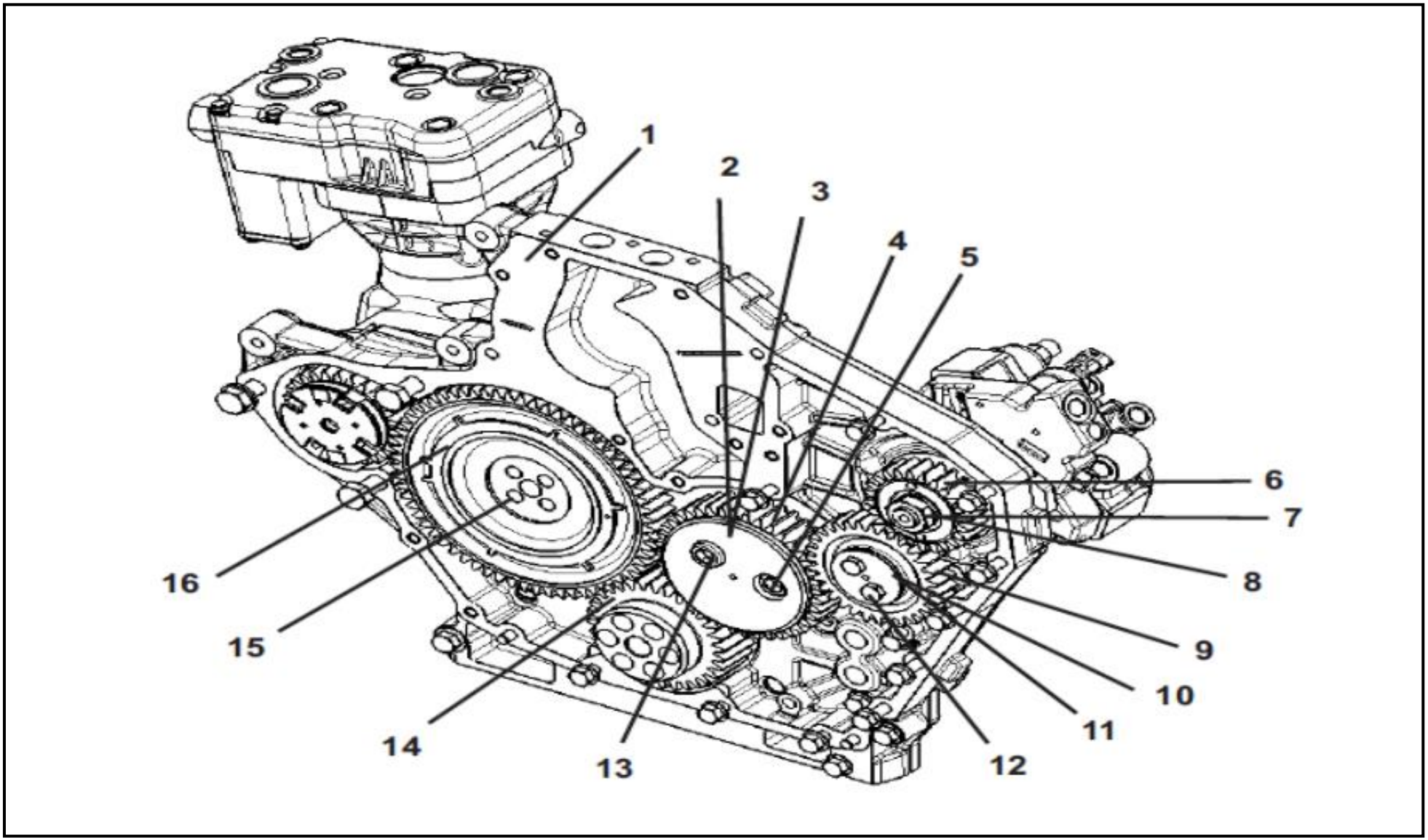

TIMING GEARS (2 & 4 VCR) Diagram No. 10

SR	PART NO.	DESCRIPTION	QTY	APPLICABLE MODEL	REMARKS
1	51.01903-0322	GASKET FOR TIMING COVER	1	COMMON FOR 2 & 4 VCR ENGINES ONLY	
2	51.93020-1073	BUSH FOR INTERMEDIATE GEAR 1	1	COMMON FOR 2 & 4 VCR ENGINES ONLY	
3	64.04506-0005	HUB - INTERMEDIATE GEAR 1	1	COMMON FOR 2 & 4 VCR ENGINES ONLY	
4	64.04505-5002	INTERMEDIATE GEAR 1- ASSLY	1	COMMON FOR 2 & 4 VCR ENGINES ONLY	
5	06.02099-0411	SCREW M14X1.75X60-8.8 PHR DIN 912	1	COMMON FOR 2 & 4 VCR ENGINES ONLY	
6	51.11301-0259	F I P DRIVE GEAR	1	COMMON FOR 2 & 4 VCR ENGINES ONLY	SUPERCEDED BY 64.11301-0276
7	64.90501-0040	HEX NUT	1	COMMON FOR 2 & 4 VCR ENGINES ONLY	
8	64.90710-0008	WASHER	1	COMMON FOR 2 & 4 VCR ENGINES ONLY	
9	51.04505-5119	INTERMEDIATE GEAR 2- ASSLY	1	COMMON FOR 2 & 4 VCR ENGINES ONLY	SUPERCEDED BY 64.04505-5157
10	51.11302-0051	INTERMEDIATE GEAR SHAFT	1	COMMON FOR 2 & 4 VCR ENGINES ONLY	64.11302-0001 ALTERNATE
11	51.93020-1070	BUSH FOR INTERMEDIATE GEAR 2	1	COMMON FOR 2 & 4 VCR ENGINES ONLY	
12	64.90020-0100	HHS M8 X 40 DIN 933 - 8.8	2	COMMON FOR 2 & 4 VCR ENGINES ONLY	
13	06.02099-0365	SCREW M14X1.75X45-8.8	1	COMMON FOR 2 & 4 VCR ENGINES ONLY	64.90030-0001 ALTERNATE
14	51.02115-0251	CRANKSHAFT GEAR	1	COMMON FOR 2 VCR ENGINES ONLY	SUPERCEDED BY 64.02115-0277
15	64.90020-0001	HEX COLLAR SCREW M10X1.25X38	4	COMMON FOR 2 & 4 VCR ENGINES ONLY	
16	51.04501-5013	ASSLY CAMSHAFT GEAR	1	COMMON FOR 2 & 4 VCR ENGINES ONLY	ALTERNATE 64.04501-5001 OR 64.04501-5025

TIMING CASE **Diagram No. 11**

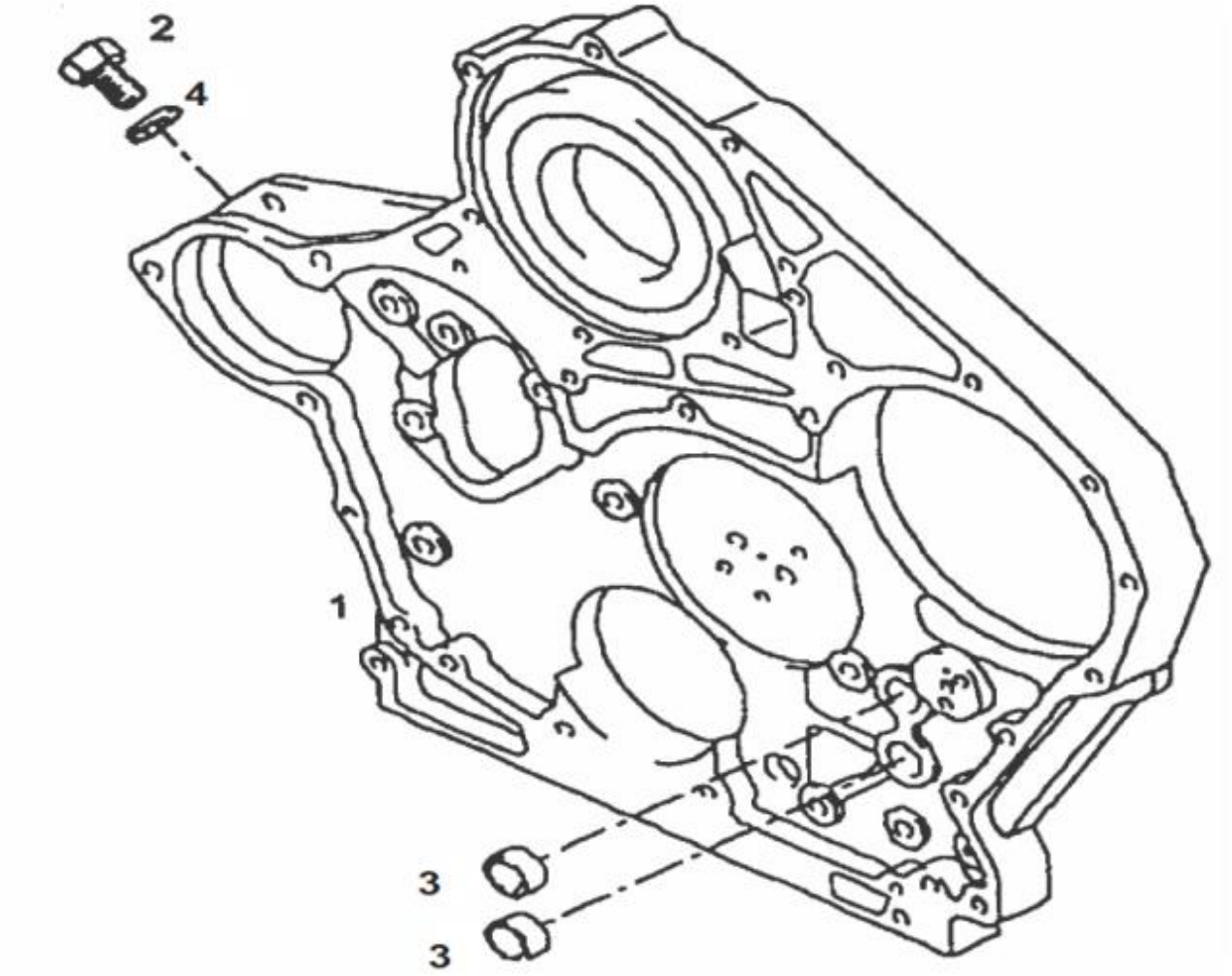

TIMING CASE

Diagram No. 11

SR	PART NO.	DESCRIPTION	QTY	APPLICABLE MODEL	REMARKS
1	64.01304-6094	ASSY TIMING GEAR CASE	1	COMMON FOR ALL MODELS EXCEPT MODELS WITH 280 HP 2 & 4 VCR ENGINES	
2	64.90020-0141	HEX SCREW M6X8-8.8	1	COMMON FOR ALL MODELS	
3	51.93020-0378	BUSH	2	COMMON FOR ALL MODELS EXCEPT MODELS WITH 280 HP 2 & 4 VCR ENGINES	
4	06.56631-0231	SEALING RING PCS-6.3 X11 -ST/FKM1-80	1	COMMON FOR ALL MODELS	

TIMING COVER & MOUNTING (2 & 4 VCR)

Diagram No. 12

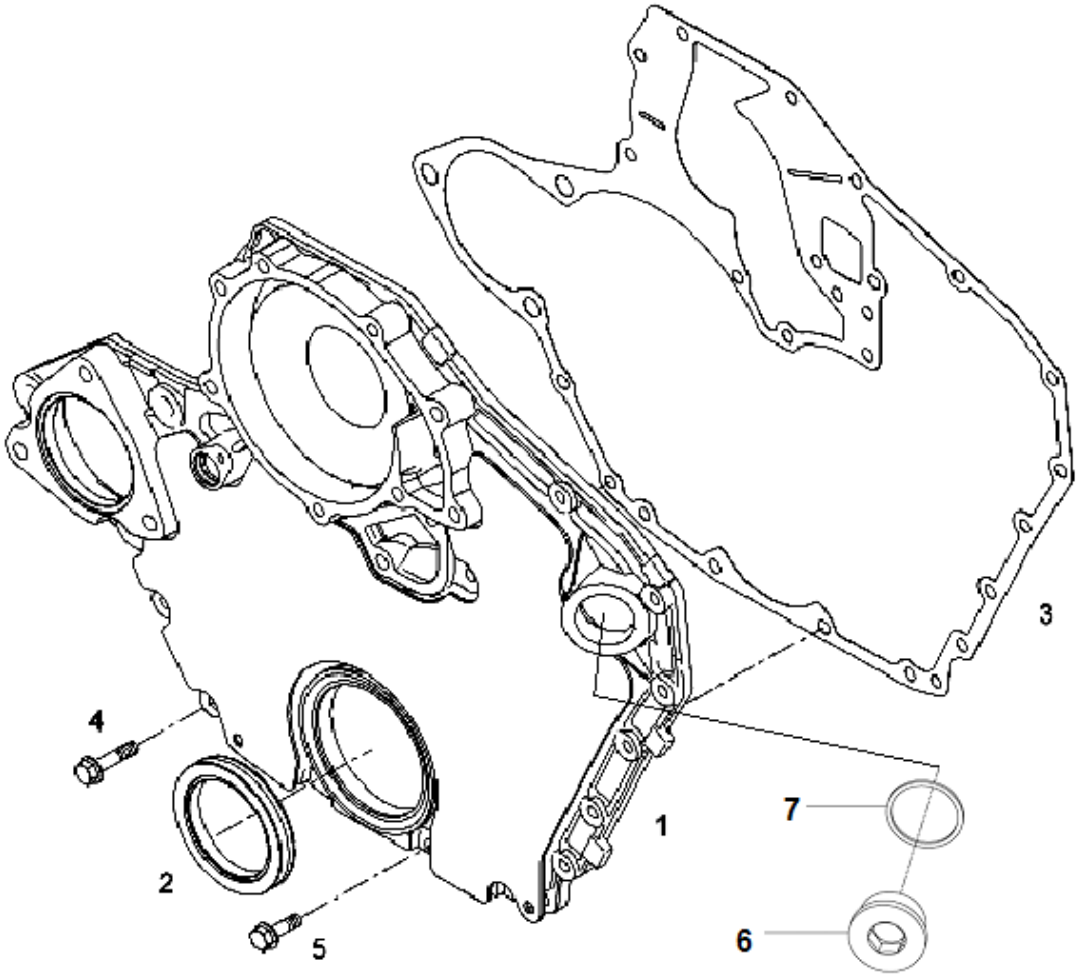

TIMING COVER & MOUNTING (2 & 4 VCR) Diagram No. 12

SR	PART NO.	DESCRIPTION	QTY	APPLICABLE MODEL	REMARKS
1	51.01305-5144	TIMING COVER M/C	1	COMMON FOR MODELS WITH 2 & 4 VCR ENGINES ONLY	SUPERCEDED BY 51.01305-5154
2	64.01510-0004	OIL SEAL - FRONT	1	COMMON FOR MODELS WITH 2 & 4 VCR ENGINES ONLY	
3	51.01903-0322	GASKET FOR TIMING COVER	1	COMMON FOR MODELS WITH 2 & 4 VCR ENGINES ONLY	
4	64.90030-0048	HEX FLANGE BOLT M8X35	8	COMMON FOR MODELS WITH 2 & 4 VCR ENGINES ONLY	
5	64.90030-0049	FLANGE BOLT M8X25-10.9	3	COMMON FOR MODELS WITH 2 & 4 VCR ENGINES ONLY	
6	64.90490-0038	CLOSING PLUG M38X1.5-ST-A3C	1	COMMON FOR ALL MODELS EXCEPT 25.180 HL	
7	64.91710-0029	SEALING RING A38X44-CU	1	COMMON FOR ALL MODELS EXCEPT 25.180 HL	

TIMING COVER **Diagram No. 13**

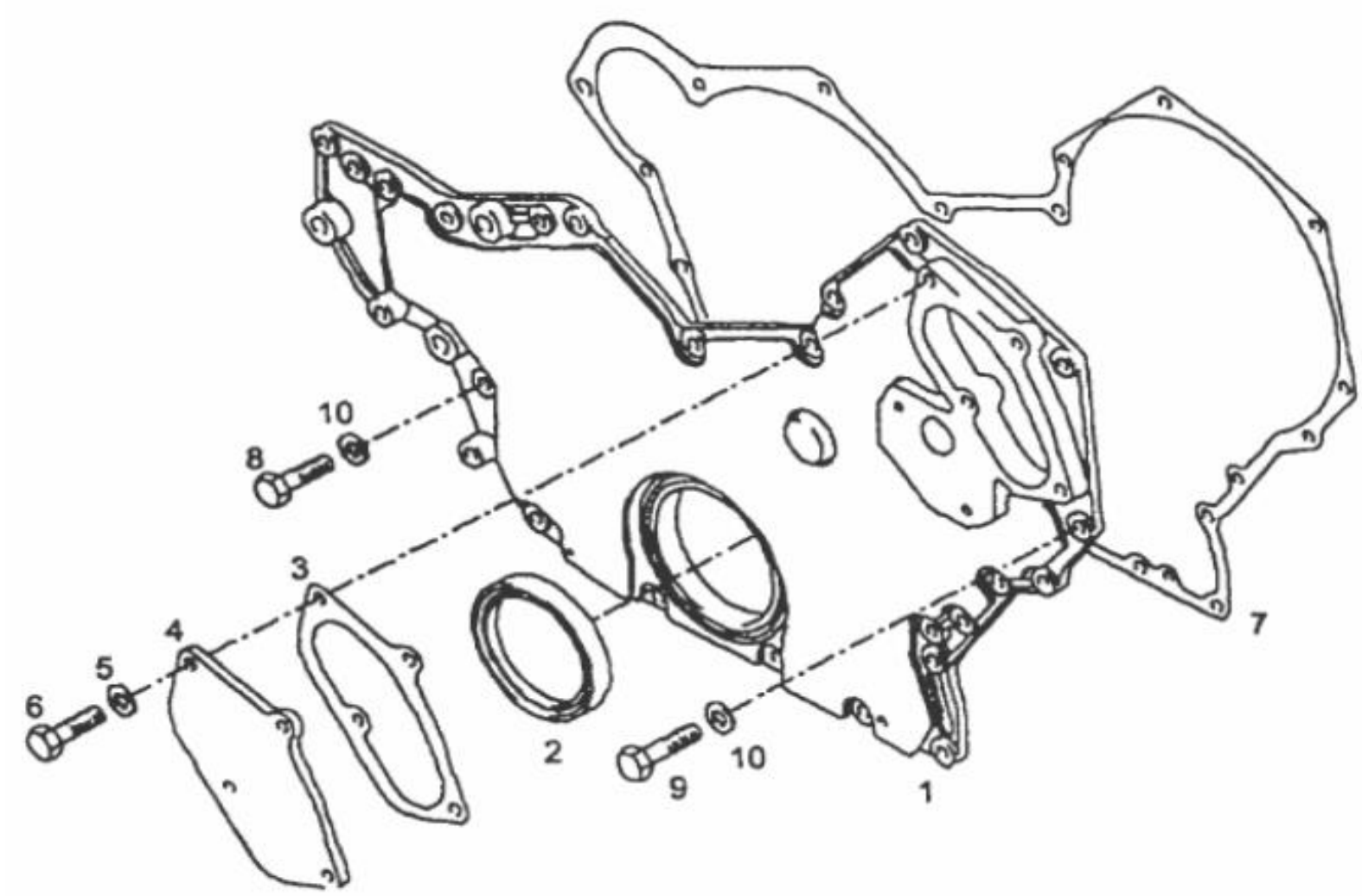

TIMING COVER

Diagram No. 13

SR	PART NO.	DESCRIPTION	QTY	APPLICABLE MODEL	REMARKS
1	51.01305-0182	TIMING COVER M/C	1	COMMON FOR ALL MODELS EXCEPT MODELS WITH 2 & 4 VCR ENGINES	
2	64.01510-0004	OIL SEAL - FRONT	1	COMMON FOR ALL MODELS	
3	64.01903-0002	GASKET- TIMING CASE	1	SEALENT USED	PART NOT USED
4	64.01304-0001	COVER (FIP DRIVE GEAR)	1	COMMON FOR ALL MODELS EXCEPT MODELS WITH 2 & 4 VCR ENGINES	
5	64.90710-0026	PL WASHER A8.4 DIN125-ST	4	COMMON FOR ALL MODELS	
6	64.90020-0095	HHS 8X25 DIN 933-8.8	4	COMMON FOR ALL MODELS	
7	64.01903-0003	GASKET FOR TIMING COVER	1	COMMON FOR ALL MODELS EXCEPT MODELS WITH 2 & 4 VCR ENGINES	
8	64.90020-0095	HHS 8X25 DIN 933-8.8	6	COMMON FOR ALL MODELS	
9	64.90020-0097	HHS M8X30 DIN 933-8.8	10	COMMON FOR ALL MODELS	
10	64.90710-0026	PL WASHER A8.4 DIN125-ST	16	COMMON FOR ALL MODELS	

CONNECTING ROD **Diagram No. 14**

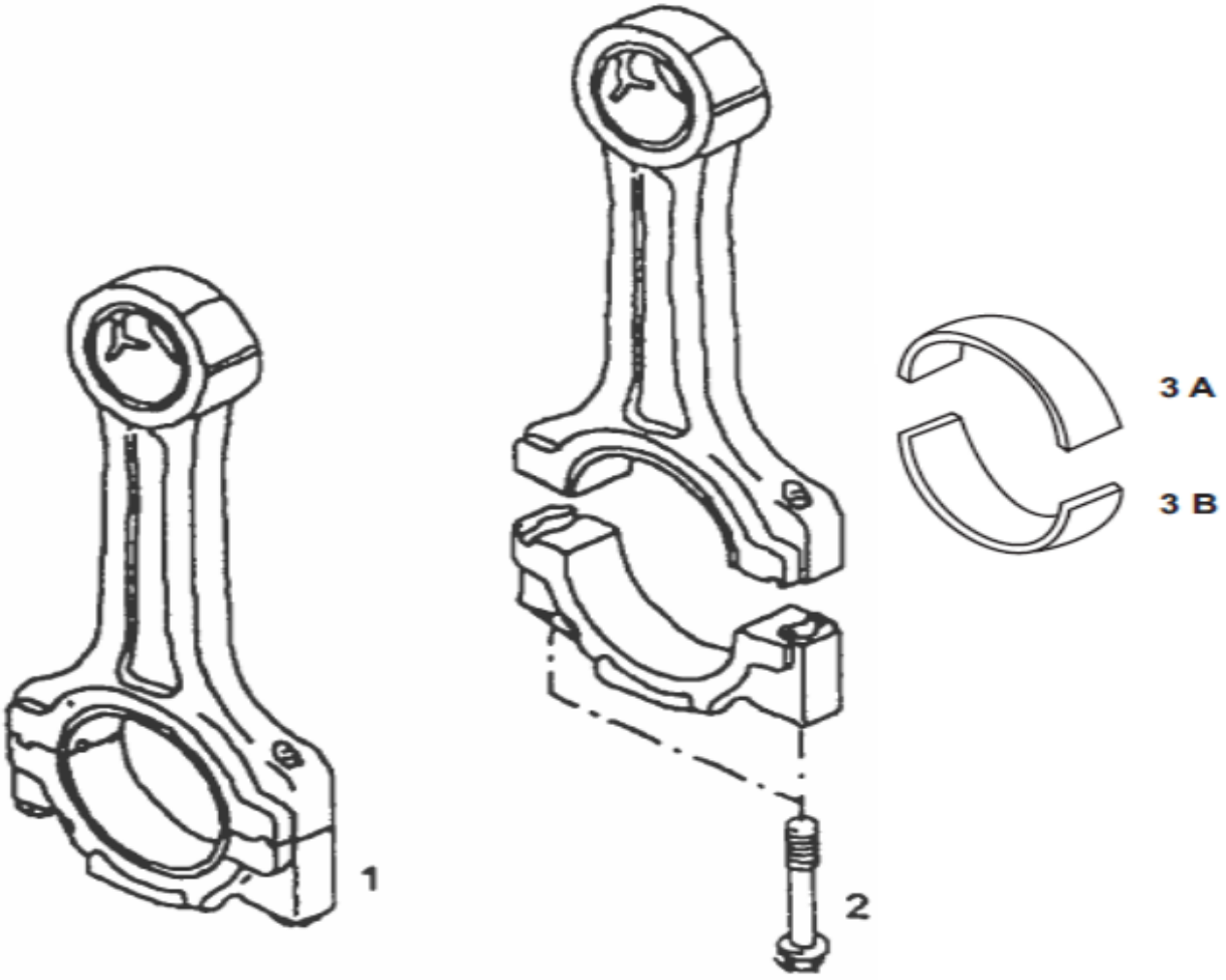

CONNECTING ROD

Diagram No. 14

SR	PART NO.	DESCRIPTION	QTY	APPLICABLE MODEL	REMARKS
1	64.02400-6001	CONNECTING ROD ASSEMBLY (CRACKED)	6	COMMON FOR ALL MODELS	ONLY QTY DIFFERENCE FOR 180 HP 4 CYLINDER ENGINES. SUPERCEDED BY 64.02400-6203
-	64.02405-1001	CONN ROD BUSH	6	COMMON FOR ALL MODELS	ONLY QTY DIFFERENCE FOR 180 HP 4 CYLINDER ENGINES
2	64.90490-0006	CONN ROD BOLT	12	COMMON FOR ALL MODELS	ONLY QTY DIFFERENCE FOR 180 HP 4 CYLIDER ENGINES.SUPERCEDED BY 64.90490-0165
3A	51.02410-0646	CONNECTING ROD BEARING - UPPER	6	COMMON FOR ALL MODELS	ONLY QTY DIFFERENCE FOR 180 HP 4 CYLINDER ENGINES
3B	51.02410-0645	CONNECTING ROD BEARING LOWER	6	COMMON FOR ALL MODELS	ONLY QTY DIFFERENCE FOR 180 HP 4 CYLINDER ENGINES

CRANKSHAFT **Diagram No. 15**

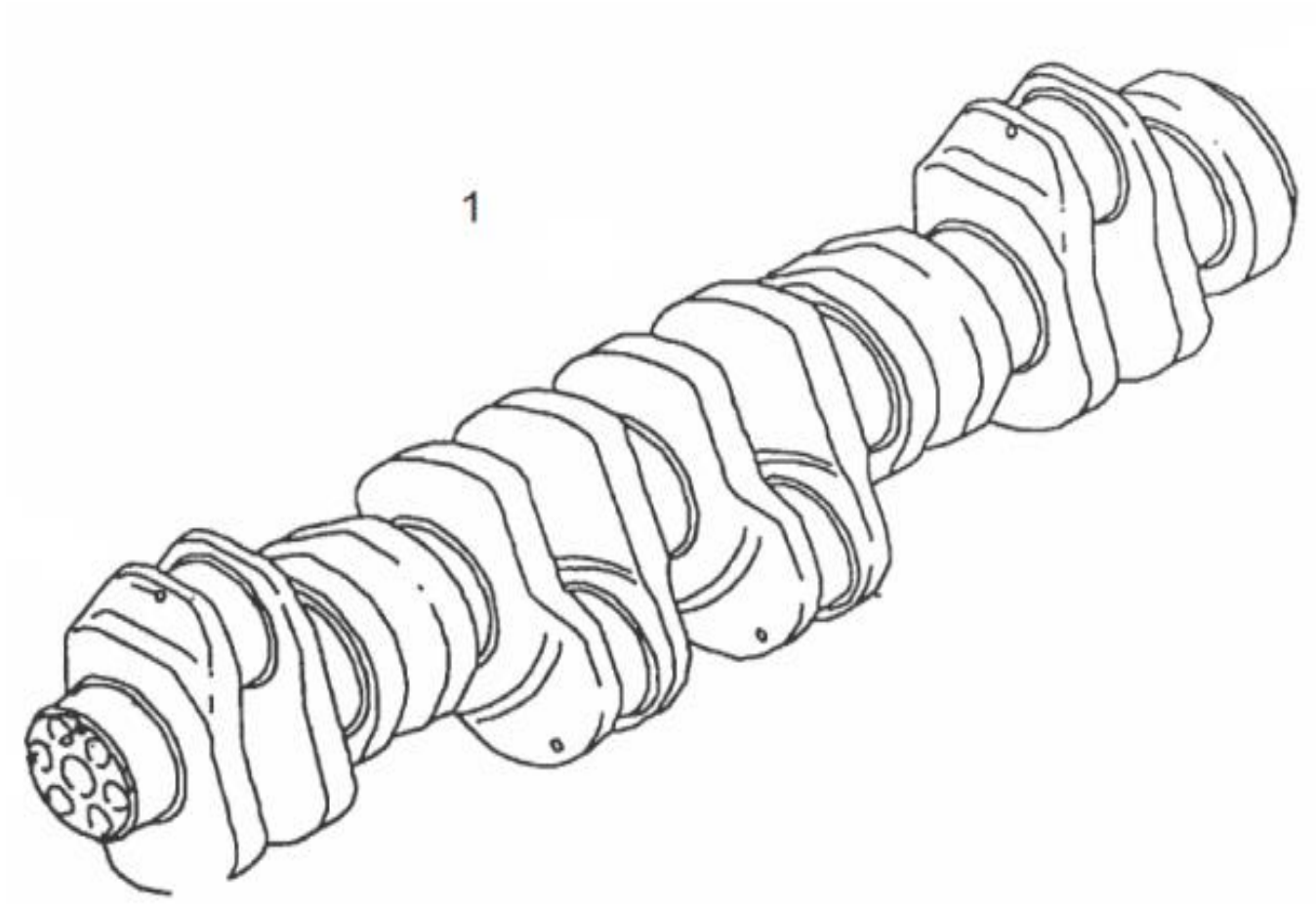

CRANKSHAFT

Diagram No. 15

SR	PART NO.	DESCRIPTION	QTY	APPLICABLE MODEL	REMARKS
1	64.02101-6001	CRANKSHAFT ASSEMBLY WITH PLUG	1	FOR ALL MODELS WITH 6 CYLINDER ENGINES	FOR 6 CYLINDER ENGINE
1	64.02101-0002	CRANKSHAFT ASSEMBLY	1	FOR ALL MODELS WITH 4 CYLINDER ENGINES	FOR 4 CYLINDER ENGINE. SUPERCEDED BY 64.02101-6002

FLYWHEEL WITH MOUNTING PARTS **Diagram No. 16**

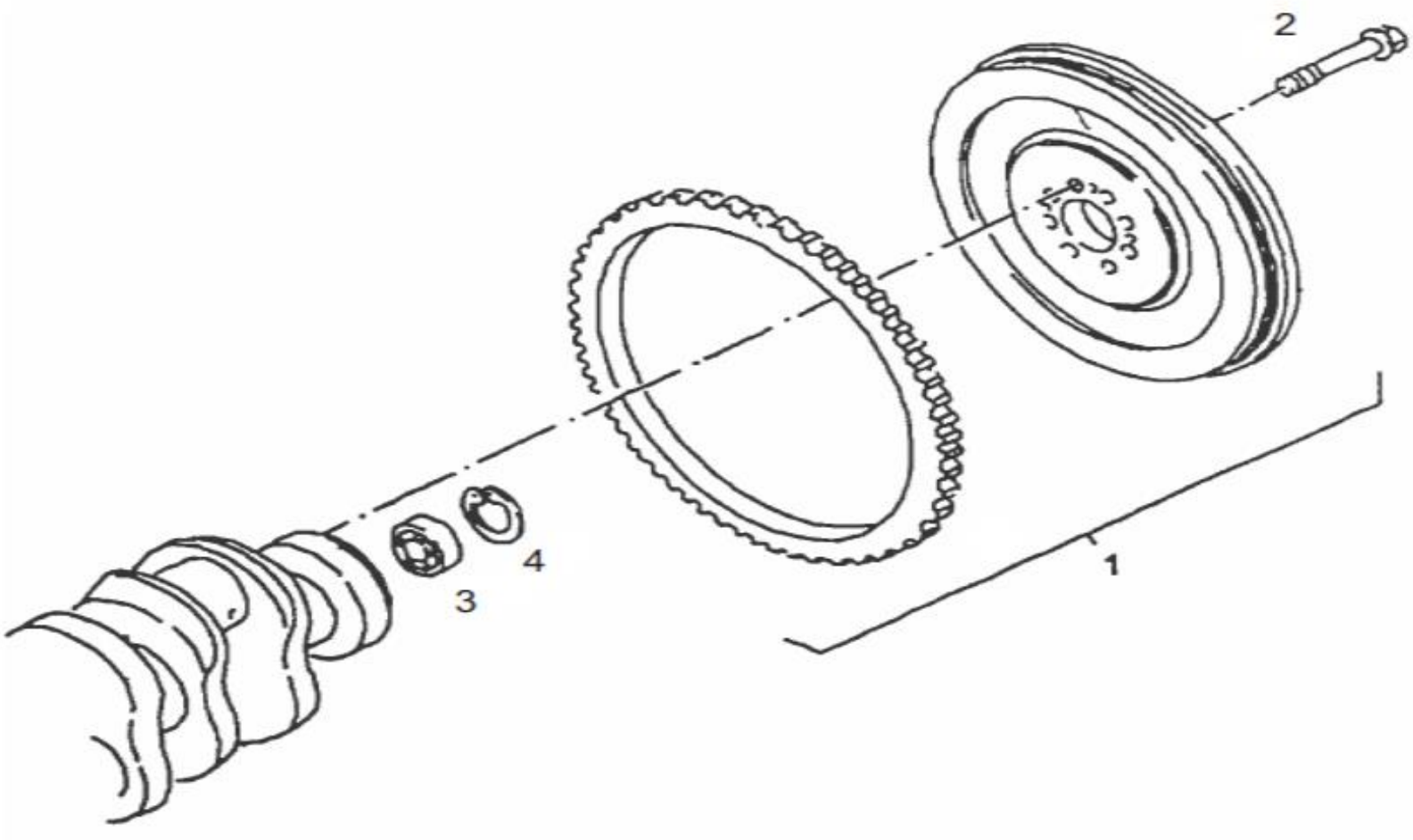

FLYWHEEL WITH MOUNTING PARTS

Diagram No. 16

SR	PART NO.	DESCRIPTION	QTY	APPLICABLE MODEL	REMARKS
1	64.02301-5001	ASSY FLYWHEEL WITH GEAR RING	1	COMMON FOR ENGINES WITH VP 44 & VE6 FIP ENGINES (280 & 220 HP) WITH 430 DIA CLUTCH ONLY	SUPERCEDED BY 64.02301-5366
1	64.02301-5008	ASSY FLYWHEEL WITH GEAR RING	1	COMMON FOR MODELS WITH 2 VCR ENGINES & 430 DIA CLUTCH ONLY	SUPERCEDED BY 64.02301-5364
1	64.02301-5002	ASSY FLYWHEEL WITH GEAR RING	1	COMMON MODELS WITH 180 HP ENGINES WITH 395 CLUTCH ONLY	
1	64.02301-5006	ASSY FLYWHEEL WITH GEAR RING	1	COMMON FOR MODELS WITH 220 HP BS II & BS III ENGINES & WITH 395 CLUTCH ONLY	SUPERCEDED BY 64.02301-5369
1	64.02301-5009	ASSY FLYWHEEL WITH GEAR RING	1	FOR RMC APPLICATION WITH VP44 & VE6 FIP ENGINES (280 & 220 HP) & WITH 395 CLUTCH ONLY	SUPERCEDED BY 64.02301-5370
1	64.02301-5011	ASSY FLYWHEEL WITH GEAR RING	1	FOR RMC & 31.230 DS48 MODELS WITH 2 VCR ENGINES & 395 CLUTCH ONLY	SUPERCEDED BY 64.02301-5365
2	64.90020-0058	HEX COLLAR BOLT M14 X 1.5 X 30	8	COMMON FOR MODELS WITH 6S GB & SAE2 FLYWHEEL ONLY.	
2	64.90020-0002	HEAD COLLAR SCREW M14X1.5X40	8	COMMON FOR MODELS WITH 9S GB & SAE1 FLYWHEEL ONLY	
2	64.90020-0374	HEX HEAD COLLAR SCREW M14X1.5X87	8	COMMON FOR RMC MODELS , 25.220 TP WITH EATON 6S GB & MODELS WITH BS IV ENGINES ONLY	
3	64.93410-0001	DEEP GROOVE BALL BEARING	1	COMMON FOR ALL MODELS	
4	64.90820-0023	CIRCLIP 47X1.75-ZNPHR5F DIN 472	1	COMMON FOR ALL MODELS	

MOUNTING PARTS FOR CRANKSHAFT WITH MAIN BEARING **Diagram No. 17**

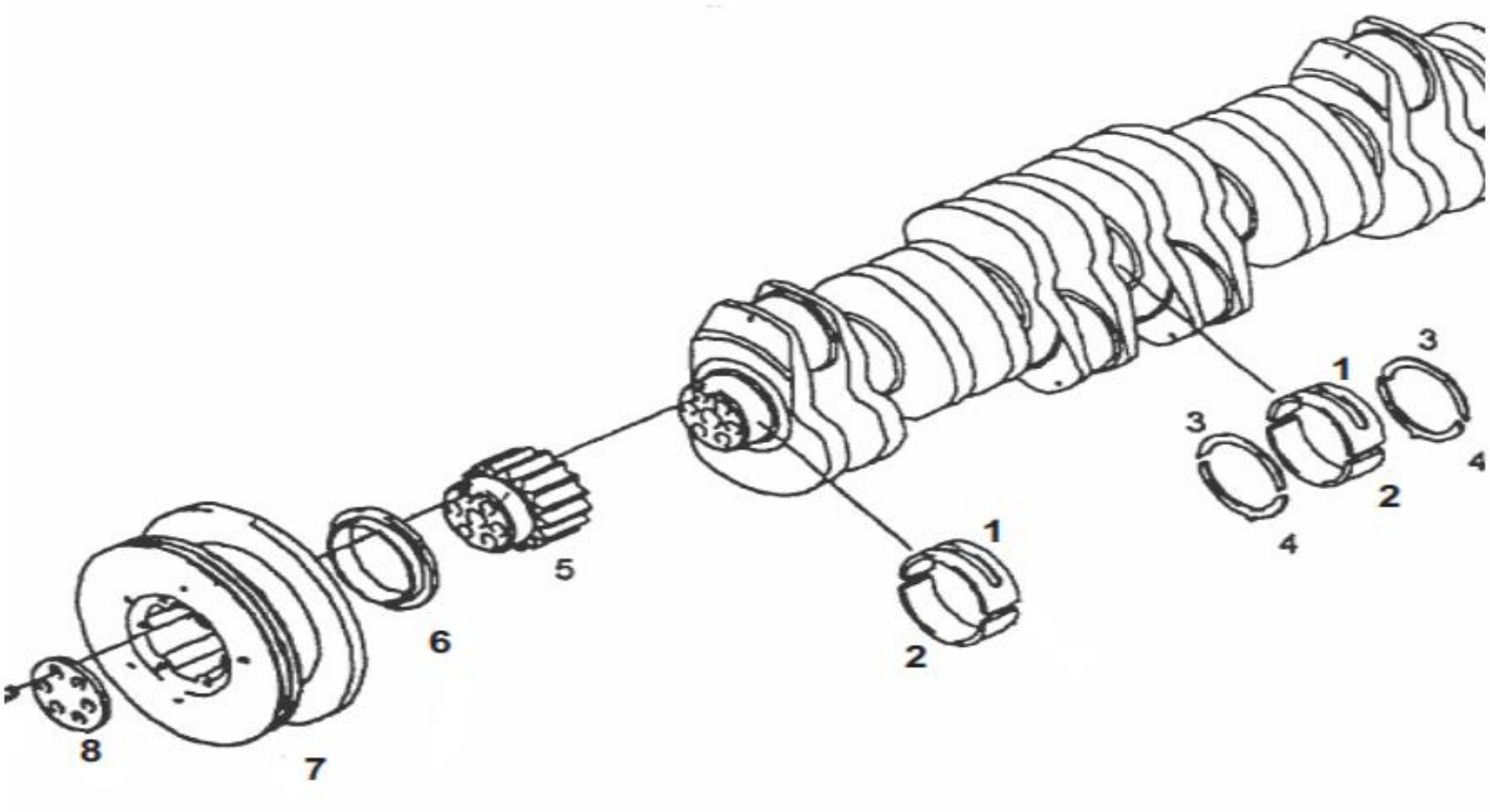

MOUNTING PARTS FOR CRANKSHAFT WITH MAIN BEARING Diagram No. 17

SR	PART NO.	DESCRIPTION	QTY	APPLICABLE MODEL	REMARKS
1	64.01113-0001	MAIN BEARING ASSEMBLY UPPER NORMAL	7	COMMON FOR ALL MODELS	ONLY QTY DIFFERENCE FOR 180 HP 4 CYLINDER ENGINES
2	64.01113-0002	MAIN BEARING ASSEMBLY LOWER NORMAL	7	COMMON FOR ALL MODELS	ONLY QTY DIFFERENCE FOR 180 HP 4 CYLINDER ENGINES
3	64.01114-0002	THRUST WASHER UPPER	2	COMMON FOR ALL MODELS	ONLY QTY DIFFERENCE FOR 180 HP 4 CYLINDER ENGINES
4	64.01114-0001	THRUST WASHER LOWER	2	COMMON FOR ALL MODELS	ONLY QTY DIFFERENCE FOR 180 HP 4 CYLINDER ENGINES
5	64.02115-0001	CRANKSHAFT GEAR	1	COMMON FOR ALL MODELS EXCEPT MODELS WITH 2 & 4 VCR ENGINES	
5	51.02115-0251	CRANKSHAFT GEAR	1	COMMON FOR 2 & 4 VCR ENGINES ONLY	SUPERCEDED BY 64.02115-0277
6	64.01505-0001	SPLASH RING PA6 MAN 318	1	COMMON FOR ALL MODELS	
7	64.02201-0001	VIBRATION DAMPER	1	COMMON FOR ALL MODELS EXCEPT MODELS WITH 2 & 4 VCR ENGINES	51.02201-0135 ALTERNATE
8	51.02201-0181	VIBRATION DAMPER	1	COMMON FOR ALL MODELS WITH 2 VCR & 4 VCR ENGINES ONLY	
8	64.02205-0001	WASHER	1	COMMON FOR ALL MODELS	
9	51.90030-0036	CYLINDRICAL SCREW	6	COMMON FOR ALL MODELS	

PISTON **Diagram No. 18**

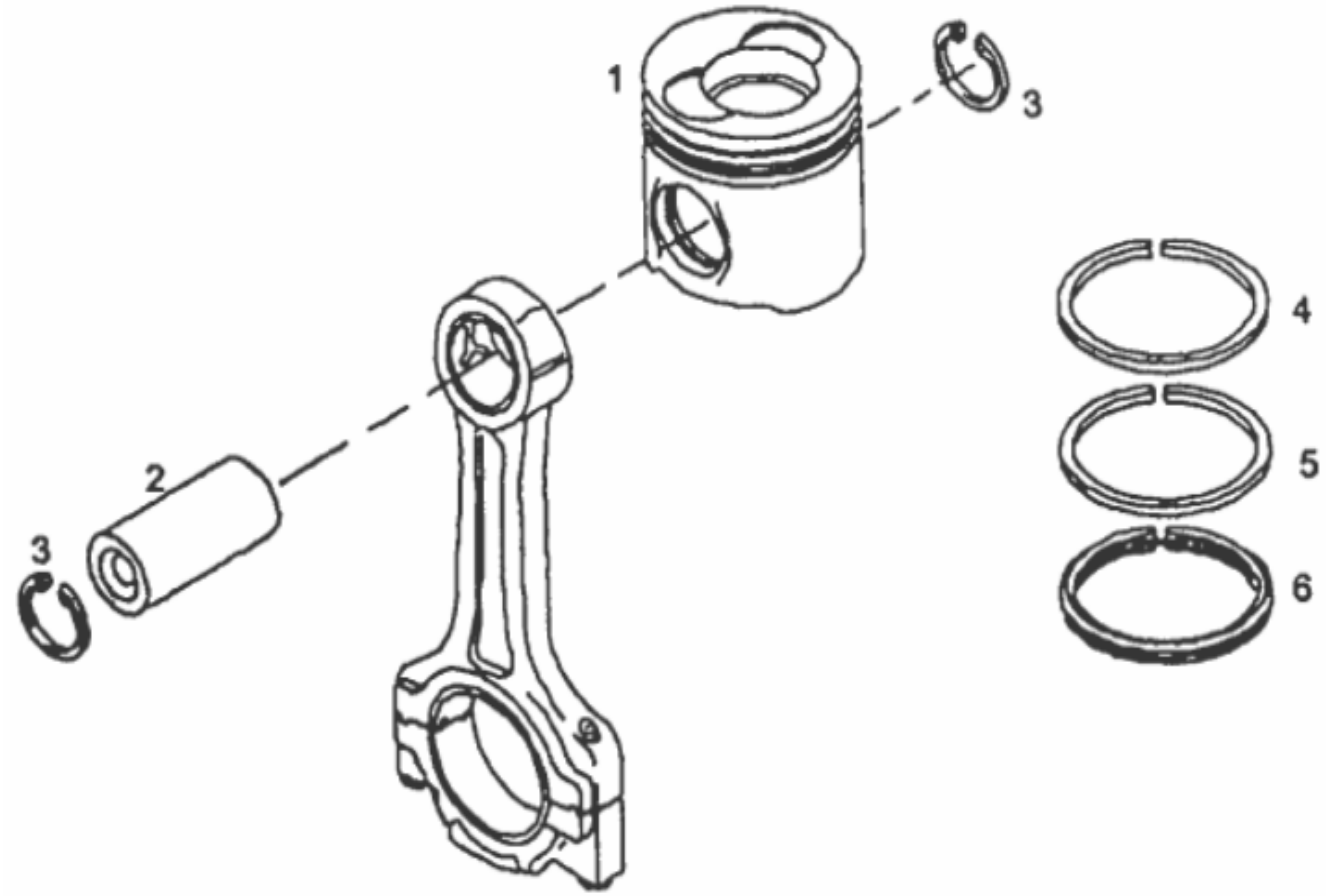

PISTON

Diagram No. 18

SR	PART NO.	DESCRIPTION	QTY	APPLICABLE MODEL	REMARKS
1	64.02511-0001	PISTON	6	COMMON FOR 280 HP ENGINES WITH VP 44 FIP ,220 HP BS II ENGINES , 220 HP BS III ENGINES WITH VP 44 FIP & 180 HP ENGINES ONLY	04 QTY FOR 180 HP ENGINE
1A	64.02511-0008	PISTON (2VCR) BSIII 280HP	6	COMMON FOR MODELS WITH 2 VCR ENGINES ONLY	
1	64.02511-0007	PISTON VE6 PHASE I	6	COMMON FOR MODELS WITH 220 HP BS III ENGINES WITH VE 6 FIP & FOR VEHICLES BEFORE VIN CUTOFF : MBKMC5BT8EN013235	FOR BARI PHASE I BS III ENGINES BEFORE VIN CUT OFF NO:13235
1	64.02511-0009	PISTON VE6 PHASE II	6	COMMON FOR MODELS WITH220 HP BS III ENGINES WITH VE 6 FIP & FOR VEHICLES AFTER VIN CUTOFF : MBKMC5BT8EN013235	FOR BARI PHASE II BS III ENGINES FROM VIN CUT OFF NO:13235
1	64.02511-0831	PISTON	6	COMMON FOR 4 VCR BS IV ENGINES ONLY	
2	64.02503-0001	PISTON PIN.	6	COMMON FOR ALL MODELS. ONLY QTY DIFFERENCE FOR 180 HP 4 CYLINDER ENGINES	SUPERCEDED BY 64.02502-0147
3	64.90820-0019	CIRCLIP 42X1.75 ZNPHR 5F DIN 472	12	COMMON FOR ALL MODELS	08 QTY FOR 180 HP ENGINE
4	64.02503-0002	KEYSTONE RING	6	COMMON FOR ALL MODELS	04 QTY FOR 180 HP ENGINE
5	64.02503-0003	TAPER FACED COMPRESSION RING	6	COMMON FOR ALL MODELS	04 QTY FOR 180 HP ENGINE
6	64.02503-0004	TAPER FACED CONFIRMABLE OILRING	6	COMMON FOR ALL MODELS	04 QTY FOR 180 HP ENGINE

V- BELT PULLEY ON CRANKSHAFT

Diagram No. 19

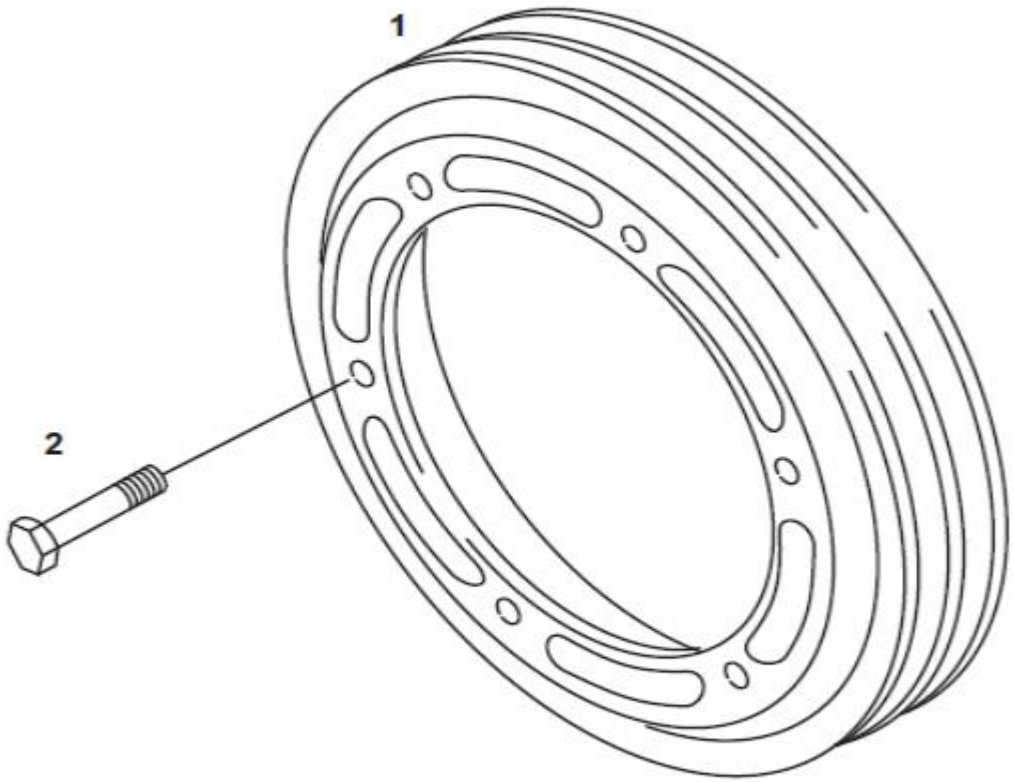

V- BELT PULLEY ON CRANKSHAFT

Diagram No. 19

SR	PART NO.	DESCRIPTION	QTY	APPLICABLE MODEL	REMARKS
1	64.02601-0595	V-BELT PULLEY FOR P T O	1	USED IN ALL MODELS WITH AC. NOT USED IN NON AC MODELS	
2	64.90020-0093	SCREW M8X20-8.8 MAN183-B1	6	USED IN ALL MODELS WITH AC. NOT USED IN NON AC MODELS	

CYLINDER HEAD **Diagram No. 20**

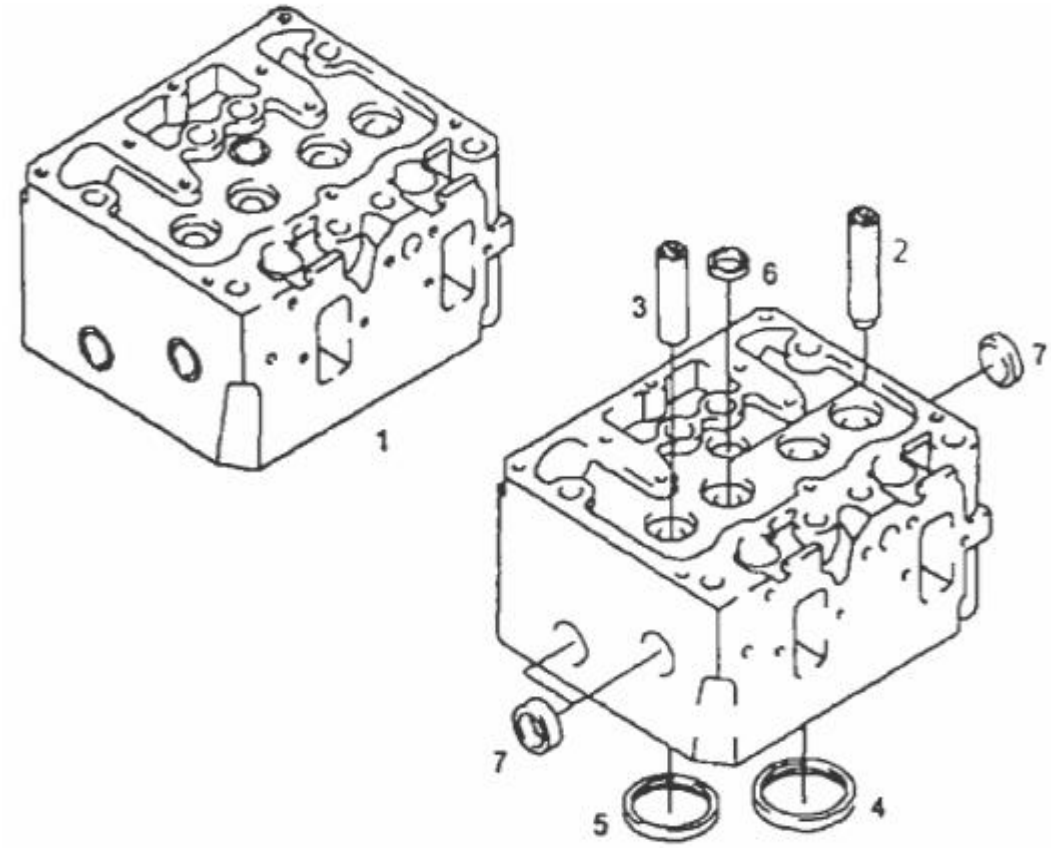

CYLINDER HEAD

Diagram No. 20

SR	PART NO.	DESCRIPTION	QTY	APPLICABLE MODEL	REMARKS
1	64.03101-6001	CYLINDER HEAD ASSY	3	COMMON FOR MODELS WITH 280 HP & 220 HP BS III ENGINES WITH VP 44 FIP & ALL 220 HP BS II ENGINES ONLY	CONSISTS OF VALVE GUIDES,VALVE SEAT RINGS & CLOSING CAPS
1	64.03101-6003	CYLINDER HEAD ASSY	3	COMMON FOR MODELS WITH 2 VCR ENGINES ONLY	CONSISTS OF VALVE GUIDES,VALVE SEAT RINGS & CLOSING CAPS
1	51.03101-6725	CYLINDER HEAD ASSY	2	COMMON FOR 180 HP 4 CYLINDER ENGINES ONLY	BARE HEAD
1	64.03101-6004	CYLINDER HEAD ASSY	3	COMMON FOR MODELS WITH 220 HP BS III ENGINES WITH VE 6 FIP	CONSISTS OF VALVE GUIDES,VALVE SEAT RINGS & CLOSING CAPS
2	64.03201-1002	VALVE GUIDE INLET	6	COMMON FOR ALL MODELS	51.03201-1057 ALTERNATE
3	64.03201-1001	VALVE GUIDE EXHAUST	6	COMMON FOR ALL MODELS	51.03201-1053 ALTERNATE
4	51.03203-0347	VALVE SEAT RING INLET EURO-III	6	COMMON FOR ALL MODELS ,EXCEPT MODELS WITH 180 HP ENGINES	
4	51.03203-0333	VALVE SEAT RING INLET EURO-II	6	COMMON FOR MODELS WITH 220 HP BS III ENGINES WITH VE 6 FIP ONLY	BARI I & BARI II ENGINES
5	51.03203-0219	VALVE SEAT RING EXHAUST EURO-III	6	COMMON FOR MODELS WITH 280 HP ENGINES (VP 44 & 2VCR),220 HP ENGINES BS III WITH VP 44 FIP,220 HP BS II ENGINES & 180 HP ENGINES	64.03203-0001 ALTERNATE
5	51.03203-0305	VALVE SEAT RING EXHAUST EURO-II	6	COMMON FOR MODELS WITH 220 HP BS III ENGINES WITH VE 6 FIP ONLY	BARI I & BARI II ENGINES
6	64.91606-0001	CLOSING CAP DIA 32.30	3	COMMON FOR ALL MODELS EXCEPT MODELS WITH 180 HP ENGINES	
7	64.91606-0003	CLOSING CAP DIA 25.20	9	COMMON FOR ALL MODELS EXCEPT MODELS WITH 180 HP ENGINES	

CYLINDER HEAD COVER WITH MOUNTING PARTS

Diagram No. 21

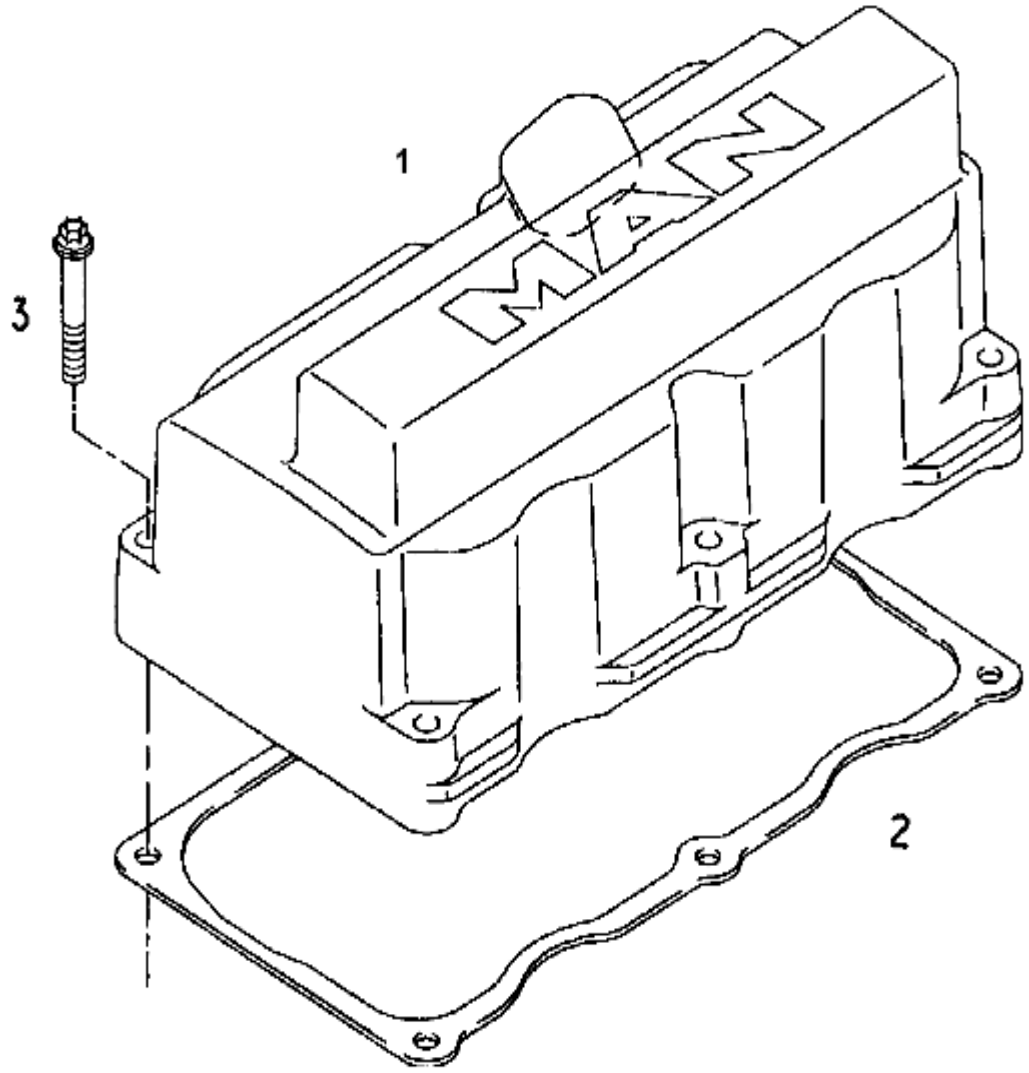

CYLINDER HEAD COVER WITH MOUNTING PARTS

Diagram No. 21

SR	PART NO.	DESCRIPTION	QTY	APPLICABLE MODEL	REMARKS
1	51.03401-0249	CYLINDER HEAD COVER M/C	3	COMMON FOR ALL MODELS EXCEPT 4 VCR BS IV ENGINES	
2	51.03905-0155	GASKET - CYLINDER HEAD COVER	3	COMMON FOR ALL MODELS EXCEPT 4 VCR BS IV ENGINES	
3	64.90030-0017	SCREW BM6X35-10.9 MAN183 PHR DIN 34801	18	COMMON FOR ALL MODELS EXCEPT 4 VCR BS IV ENGINES	

CYLINDER HEAD GASKET CYLINDER HEAD BOLTS

Diagram No. 22

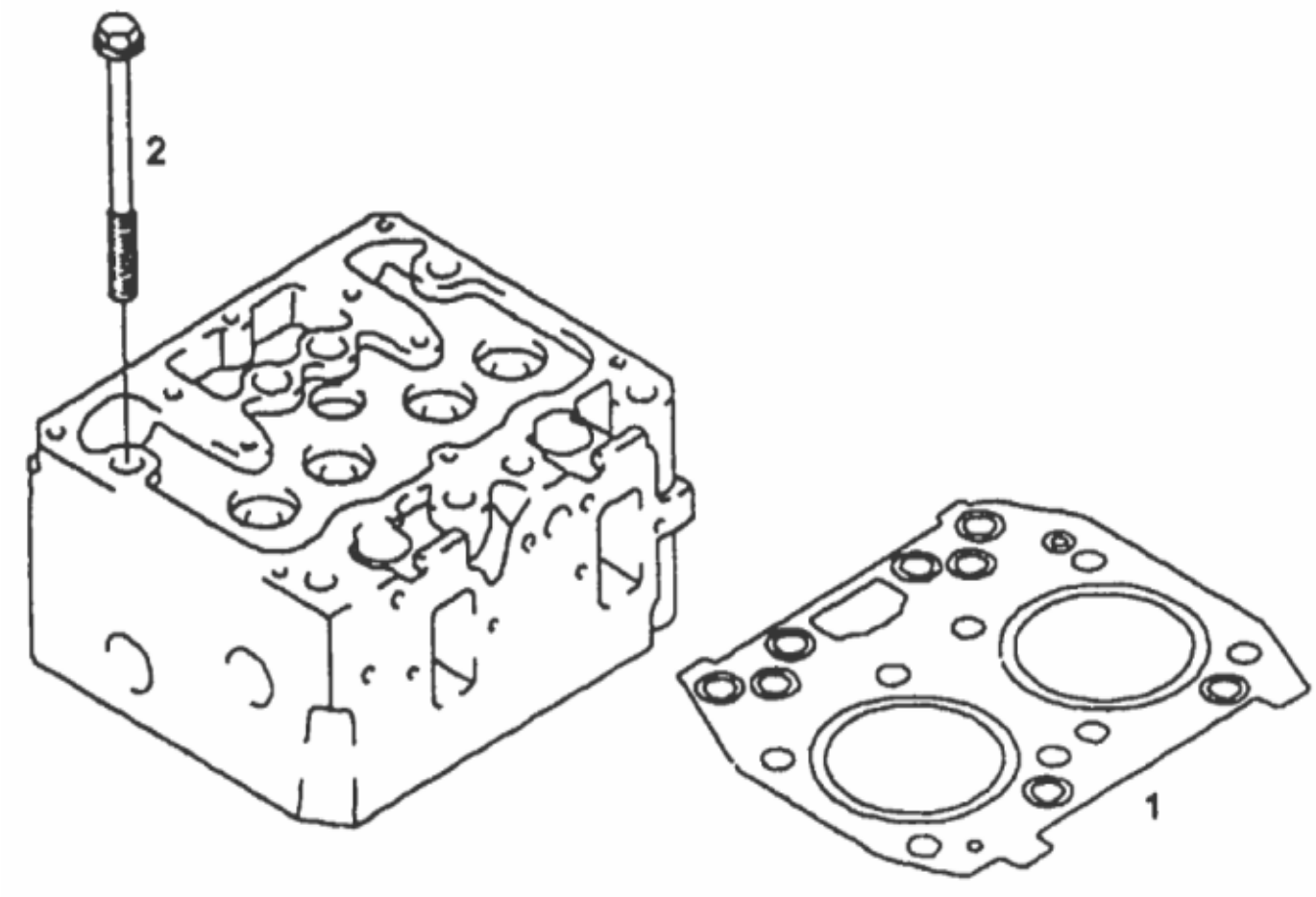

CYLINDER HEAD GASKET CYLINDER HEAD BOLTS

Diagram No. 22

SR	PART NO.	DESCRIPTION	QTY	APPLICABLE MODEL	REMARKS
1	51.03901-0378	CYLINDER HEAD GASKET	3	COMMON FOR ALL MODELS	
2	64.90020-0004	CYL HEAD BOLT M14X2X140	24	COMMON FOR ALL MODELS EXCEPT 4 VCR BS IV ENGINES	51.90020-0381 ALTERNATE

CAMSHAFT WITH CAMSHAFT GEAR

Diagram No. 23

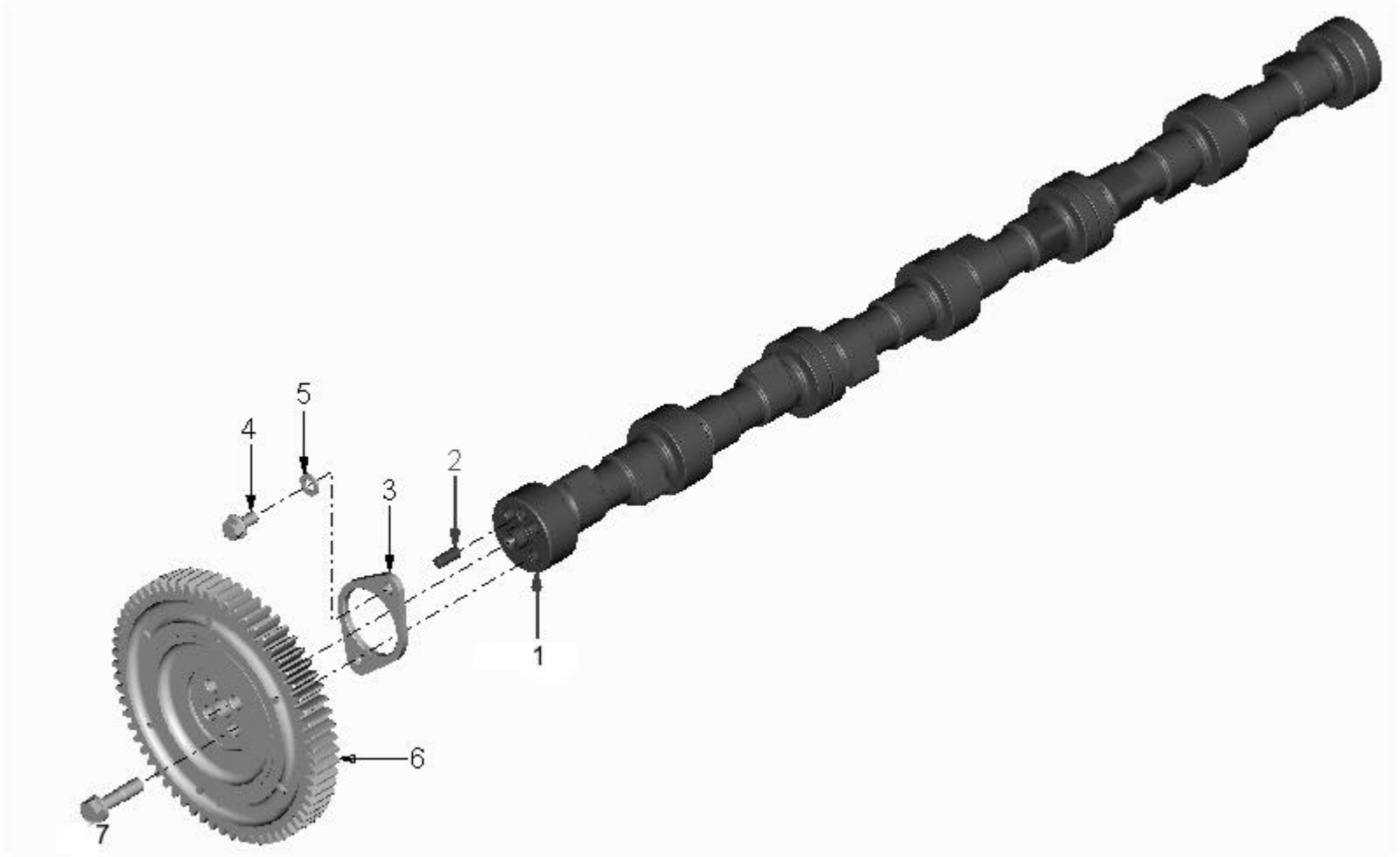

CAMSHAFT WITH CAMSHAFT GEAR

Diagram No. 23

SR	PART NO.	DESCRIPTION	QTY	APPLICABLE MODEL	REMARKS
1	64.04401-0001	CAM SHAFT MACHINED	1	COMMON FOR ALL ENGINES EXCEPT 180 HP ENGINES & 4 VCR ENGINES.	
1	64.04401-0003	CAM SHAFT MACHINED	1	COMMON FOR MODELS WITH 180 HP ENGINES ONLY	
1	64.04401-0973	CAM SHAFT	1	COMMON FOR 4 VCR BS IV ENGINES ONLY	ALTERNATE 51.04401-0789
2	64.91001-0004	DOWEL PIN 8M6X18-ST50-2K DIN 7	1	COMMON FOR ALL MODELS	
3	64.98112-0001	FLANGE	1	COMMON FOR ALL MODELS	
4	64.90020-0092	HHS M8X16 DIN 933-8.8 BTS:170102.20	2	COMMON FOR ALL MODELS	
5	64.90710-0026	PL WASHER A8.4 DIN125-ST BTS170202.12	2	COMMON FOR ALL MODELS	
6	64.04501-0001	CAM SHAFT GEAR MACHINED	1	COMMON FOR ALL MODELS EXCEPT MODELS WITH 2 & 4 VCR ENGINES	
6	64.04501-2002	CAM SHAFT GEAR MACHINED	1	COMMON FOR MODELS WITH 2 VCR ENGINES ONLY	
6	51.04501-5013	ASSLY CAMSHAFT GEAR	1	COMMON FOR MODELS WITH 4 VCR BSIV ENGINES ONLY	ALTERNATE 64.04501-5001 OR 64.04501-5025
7	64.90020-0001	HEX COLLER SCREW M10X1.25X38	4	COMMON FOR ALL MODELS	

INTERMEDIATE GEAR ASSY. 1

Diagram No. 24

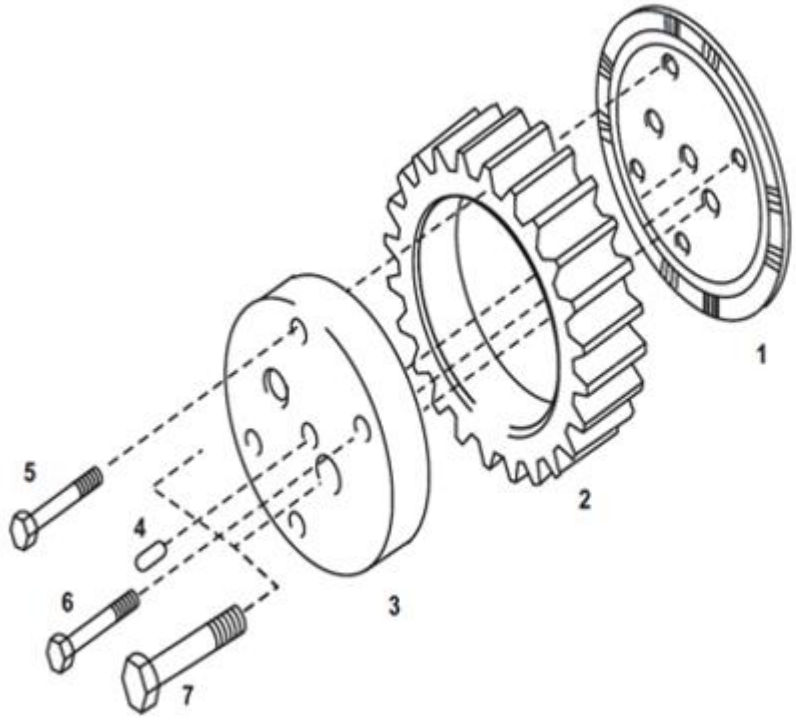

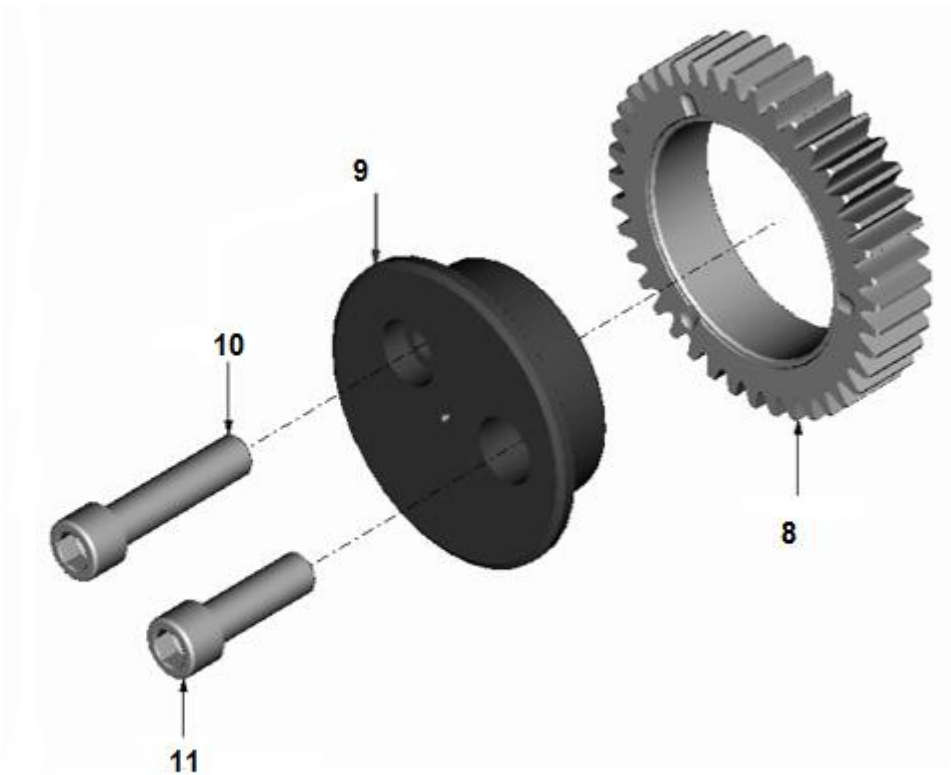

INTERMEDIATE GEAR ASSY. 1 Diagram No. 24

SR	PART NO.	DESCRIPTION	QTY	APPLICABLE MODEL	REMARKS
1	64.90720-0001	THRUST WASHER	1	FOR ALL ENGINES EXCEPT 2 & 4 VCR ENGINES	
2	64.04505-5001	INTERMEDIATE GEAR 1- ASSLY	1	FOR ALL ENGINES EXCEPT 2 & 4 VCR ENGINES	
3	64.04506-0001	INTERMEDIATE GEAR SHAFT	1	FOR ALL ENGINES EXCEPT 2 & 4 VCR ENGINES	
4	64.91301-0005	CYLINDRICAL PIN	1	FOR ALL ENGINES EXCEPT 2 & 4 VCR ENGINES	
5	64.90020-0157	HEX SCREW M8X45-8.8 MAN183 PHR DIN 933	1	FOR ALL ENGINES EXCEPT 2 & 4 VCR ENGINES	
6	64.90020-0173	HEX SCREW M8X50-10.9 MAN183 PHR DIN 933	3	FOR ALL ENGINES EXCEPT 2 & 4 VCR ENGINES	PART NOT USED.
7	06.02099-0365	SCREW M14X1.75X45-8.8 ZNPHR3F DIN 912	2	COMMON FOR ALL MODELS	
8	64.04505-5002	INTERMEDIATE GEAR 1- ASSLY	1	COMMON FOR 2 & 4 VCR ENGINES ONLY	
9	64.04506-0005	HUB – INTERMEDIATE GEAR 1	1	COMMON FOR 2 & 4 VCR ENGINES ONLY	
10	06.02099-0411	SCREW M14X1.75X60-8.8 PHR DIN 912	1	COMMON FOR 2 & 4 VCR ENGINES ONLY	
11	06.02099-0365	SCREW M14X1.75X45-8.8 ZNPHR3F DIN 912	1	COMMON FOR 2 & 4 VCR ENGINES ONLY	

INTERMEDIATE GEAR ASSY. 2 **Diagram No. 25**

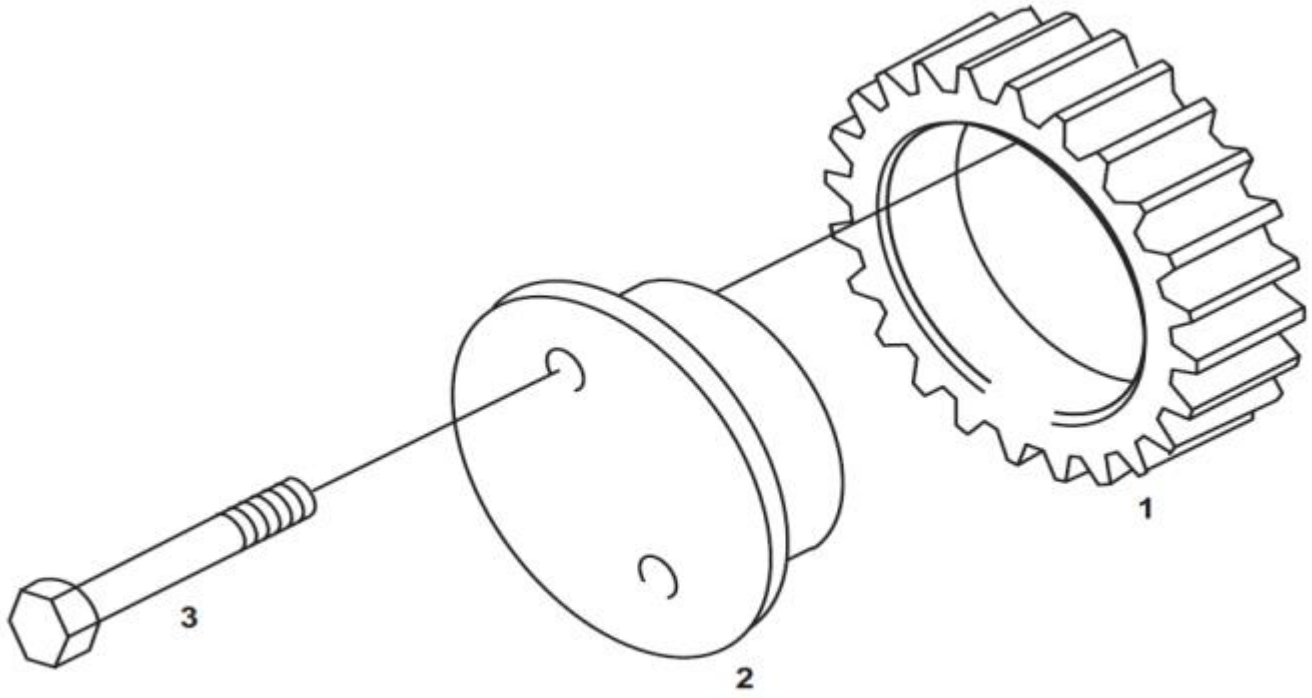

INTERMEDIATE GEAR ASSY

Diagram No. 25

SR	PART NO.	DESCRIPTION	QTY	APPLICABLE MODEL	REMARKS
1	64.04504-0001	INTERMEDIATE GEAR 2	1	COMMON FOR ALL MODELS EXCEPT MODELS WITH 2 & 4 VCR ENGINES	
1	51.04505-5119	INTERMEDIATE GEAR 2- ASSLY	1	COMMON FOR MODELS WITH 2 & 4 VCR ENGINES ONLY	SUPERCEDED BY 64.04505-5157
2	64.04506-0002	INTERMEDIATE GEAR SHAFT	1	COMMON FOR ALL MODELS EXCEPT MODELS WITH 2 & 4 VCR ENGINES	
2	64.11302-0001	HUB INTERMEDIATE GEAR-2	1	COMMON FOR MODELS WITH 2 & 4 VCR ENGINES ONLY	
3	64.90020-0173	HEX SCREW M8X50-10.9 MAN183 PHR DIN 933	1	COMMON FOR ALL MODELS EXCEPT MODELS WITH 2 & 4 VCR ENGINES	
3	64.90020-0100	HEX HEAD SCREW M8X40 DIN933-8.8 PHR	2	COMMON FOR MODELS WITH 2 & 4 VCR ENGINES ONLY	
Page No. 25		**REVISION NO. 01/07/16**			**VERSION: 001**

ROCKER BRACKET ASSEMBLY

Diagram No. 26

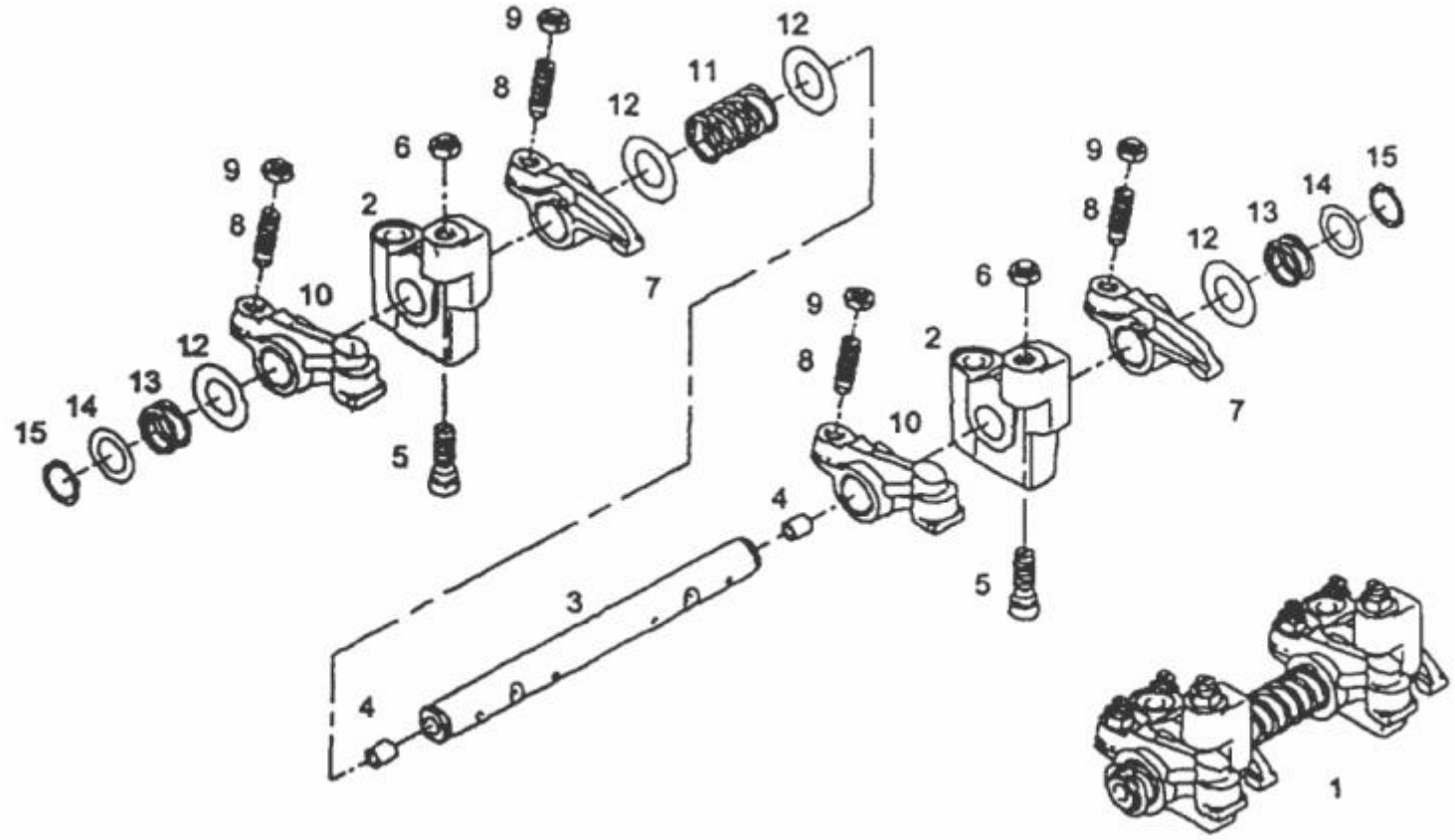

ROCKER BRACKET ASSEMBLY

Diagram No. 26

SR	PART NO.	DESCRIPTION	QTY	APPLICABLE MODEL	REMARKS
1	64.04200-4001	ASSY- ROCKER SHAFT COMPLETE (EVB)	3	COMMON FOR ALL MODELS EXCEPT 4 VCR ENGINES	
2	64.04202-0001	ROCKER ARM BRACKET	6	COMMON FOR ALL MODELS EXCEPT 4 VCR ENGINES	
3	64.04200-4002	ASSY – ROCKER SHAFT	3	COMMON FOR ALL MODELS EXCEPT 4 VCR ENGINES	
-	64.04203-0001	ROCKER ARM SHAFT	3	COMMON FOR ALL MODELS EXCEPT 4 VCR ENGINES	
4	64.90490-0066	SEALING PLUG G10 M655 (AVSEAL-II)	6	COMMON FOR ALL MODELS EXCEPT 4 VCR ENGINES	
5	51.04205-0042	ADJUSTING SCREW	6	COMMON FOR ALL MODELS EXCEPT 4 VCR ENGINES	64.04205-0001 ALTERNATE
6	64.90501-0001	HEX NUT M10X1	6	COMMON FOR ALL MODELS EXCEPT 4 VCR ENGINES	
7	64.04201-6173	ROCKER LEVER ASSY – INTAKE	6	COMMON FOR ALL MODELS EXCEPT 4 VCR ENGINES	
8	64.04205-0002	ADJUSTING SCREW M10X1	12	COMMON FOR ALL MODELS EXCEPT 4 VCR ENGINES	51.04205-0039 ALTERNATE
9	64.90501-0001	HEX NUT M10X1	12	COMMON FOR ALL MODELS EXCEPT 4 VCR ENGINES	51.90501-0030 ALTERNATE
10	64.04201-6001	ASSY ROCKER LEVER	6	COMMON FOR ALL MODELS EXCEPT 4 VCR ENGINES	
-	64.04201-5001	ROCKER LEVER MACHINED ASSY	6	COMMON FOR ALL MODELS EXCEPT 4 VCR ENGINES	INCLUDED IN SR 10
-	64.04250-0001	PISTON FOR ROCKER LEVER	6	COMMON FOR ALL MODELS EXCEPT 4 VCR ENGINES	INCLUDED IN SR 10.SUPERCEDED BY 51.04250-0004
-	64.91001-0009	PIN DIN EN 28752 – 2X20 A-ST	6	COMMON FOR ALL MODELS EXCEPT 4 VCR ENGINES	INCLUDED IN SR 10
-	64.97601-0013	SPRING INNER	6	COMMON FOR ALL MODELS EXCEPT 4 VCR ENGINES	INCLUDED IN SR 10
-	64.97601-0015	SPRING OUTER	6	COMMON FOR ALL MODELS EXCEPT 4 VCR ENGINES	INCLUDED IN SR 10
-	64.96481-0007	BALL 5MM III DIN 5401	6	COMMON FOR ALL MODELS EXCEPT 4 VCR ENGINES	INCLUDED IN SR 10

11	64.97601-0009	PRESSURE SPRING	3	COMMON FOR ALL MODELS EXCEPT 4 VCR ENGINES	
12	64.90701-0008	WASHER	12	COMMON FOR ALL MODELS EXCEPT 4 VCR ENGINES	
13	64.97601-0010	PRESSURE SPRING	6	COMMON FOR ALL MODELS EXCEPT 4 VCR ENGINES	
14	64.90701-0009	WASHER 20.3X30X0.5	6	COMMON FOR ALL MODELS EXCEPT 4 VCR ENGINES	
15	64.90820-0021	CIRCLIP 20X1.2-ZNPHR5F DIN 471	6	COMMON FOR ALL MODELS EXCEPT 4 VCR ENGINES	
Page No. 26		**REVISION NO. 01/07/16**			**VERSION: 001**

VALVES VALVE TAPET **Diagram No. 27**

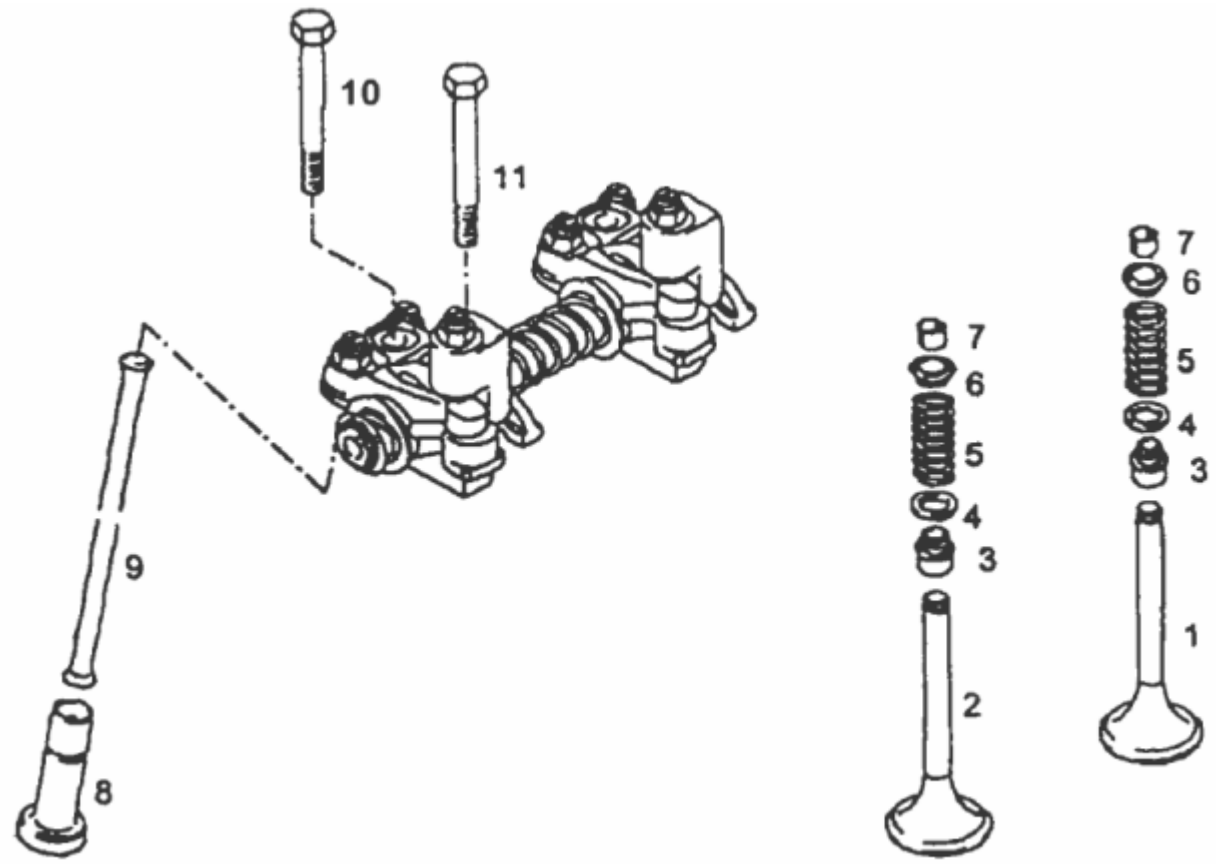

VALVES VALVE TAPET

Diagram No. 27

SR	PART NO.	DESCRIPTION	QTY	APPLICABLE MODEL	REMARKS
1	64.04101-0001	INLET VALVE	6	COMMON FOR ALL MODELS EXCEPT 4 VCR ENGINES	
2	64.04101-0002	EXHAUST VALVE	6	COMMON FOR ALL MODELS EXCEPT 4 VCR ENGINES	
3	64.04902-0001	VALVE STEM SEAL	12	COMMON FOR ALL MODELS EXCEPT 4 VCR ENGINES	51.04902-0029 ALTERNATE
4	64.90701-0001	WASHER D24/36/0.5	12	COMMON FOR ALL MODELS EXCEPT 4 VCR ENGINES	
5	64.04102-0001	VALVE SPRING	12	COMMON FOR ALL MODELS EXCEPT 4 VCR ENGINES	
6	64.04103-0001	VALVE SPRING RETAINER	12	COMMON FOR ALL MODELS EXCEPT 4 VCR ENGINES	
7	64.04104-0001	VALVE COLLET	24	COMMON FOR ALL MODELS EXCEPT 4 VCR ENGINES	
8	64.04301-0001	VALVE TAPPET	12	COMMON FOR ALL MODELS EXCEPT 4 VCR ENGINES	
9	64.04302-0001	PUSH ROD	12	COMMON FOR ALL MODELS EXCEPT 4 VCR ENGINES	
10	64.90490-0007	SPECIAL SCREW M10X65-10.9	6	COMMON FOR ALL MODELS EXCEPT 4 VCR ENGINES	
11	64.90490-0024	SIX ROUND SCREW M10X75-10.9	6	COMMON FOR ALL MODELS EXCEPT 4 VCR ENGINES	

DRAIN PLUG OIL FILTER HEAD DELETION STARTING AID

Diagram No. 28

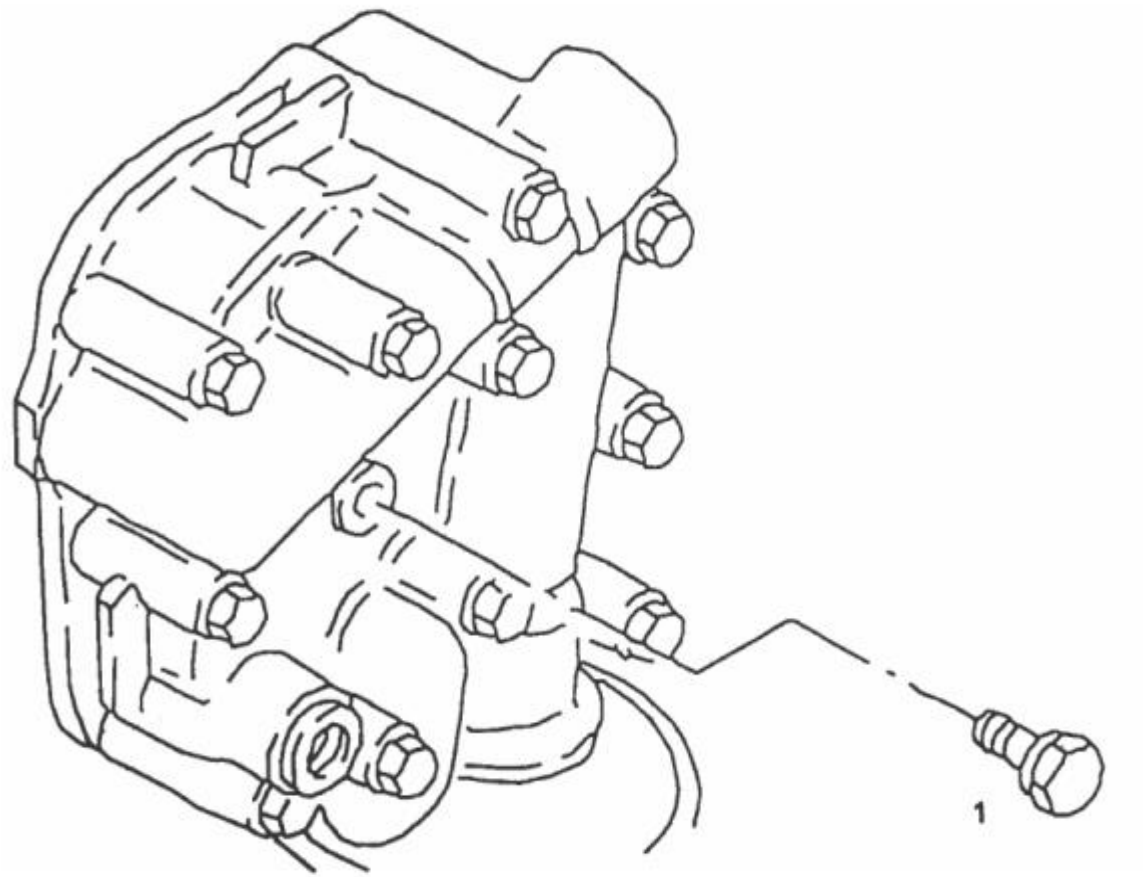

DRAIN PLUG OIL FILTER HEAD DELETION STARTING AID

Diagram No. 28

SR	PART NO.	DESCRIPTION	QTY	APPLICABLE MODEL	REMARKS
1	64.90490-0043	LOCKING BOLT C-M 10X1-ST-A3C DIN 7604	1	COMMON FOR ALL MODELS	
-	06.56631-0104	SEALING WASHER BS-10,7X16,0-ST FPM1-80	1	COMMON FOR ALL MODELS	

FUEL FILTER (2 & 4 VCR)

Diagram No. 29

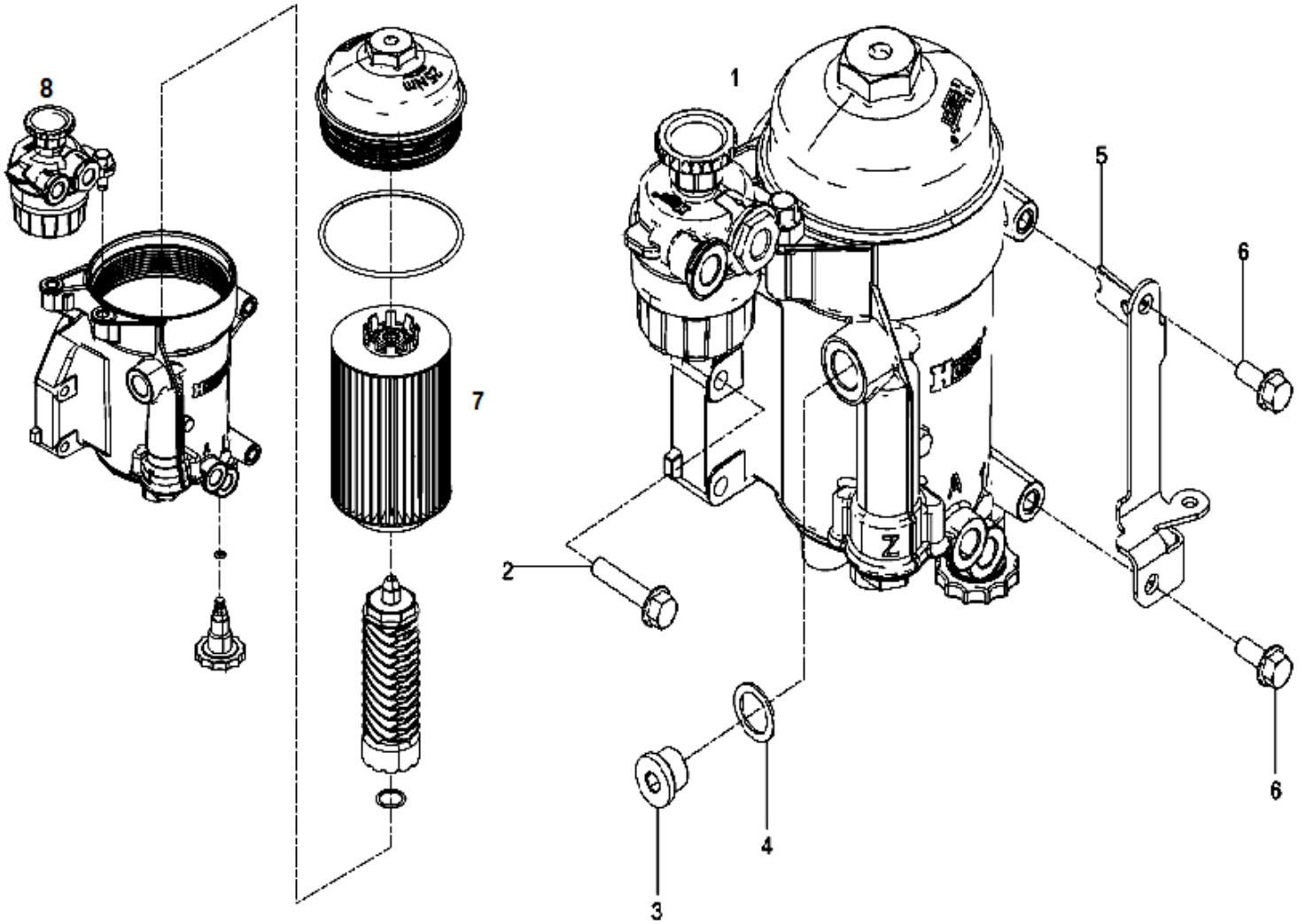

FUEL FILTER (2 & 4 VCR) Diagram No. 29

SR	PART NO.	DESCRIPTION	QTY	APPLICABLE MODEL	REMARKS
1	51.12501-7289	FUEL FILTER ASSEMBLY	1	COMMON FOR MODELS WITH 2 & 4 VCR ENGINES ONLY	SUPERSEDED BY 51.12501-7313
1	51.12501-7313	FUEL FILTER ASSEMBLY	1	COMMON FOR MODELS WITH 2 & 4 VCR ENGINES ONLY	
2	64.90030-0062	FLANGE BOLT M8X40-10.9 MAN183-B1	3	COMMON FOR MODELS WITH 2 & 4 VCR ENGINES ONLY	
3	64.90490-0037	LOCKING BOLT M18X1.5-ST-A3C DIN 908	1	COMMON FOR MODELS WITH 2 & 4 VCR ENGINES ONLY	
4	06.56631-0109	SEALING RING BS18.7X26.0-ST /FPM 1-80	1	COMMON FOR MODELS WITH 2 & 4 VCR ENGINES ONLY	
5	51.12340-0116	BRACKET AT THE FUEL FILTER	1	COMMON FOR MODELS WITH 2 & 4 VCR ENGINES ONLY	
6	64.90030-0060	FLANGE BOLT M8X20-10.9 MAN183-B1	2	COMMON FOR MODELS WITH 2 & 4 VCR ENGINES ONLY	
7	51.12503-0061	FUEL FILTER CARTRIDGE WITH O RING	1	COMMON FOR MODELS WITH 2 & 4 VCR ENGINES ONLY	COMMON FOR BOTH ABOVE FILTER ASSEMBLIES
8	51.12150-0001	FUEL PREFILTER	1	COMMON FOR MODELS WITH 2 & 4 VCR ENGINES ONLY	

MOUNTING OIL SUMP ON CRANKCASE YOKE

Diagram No. 30

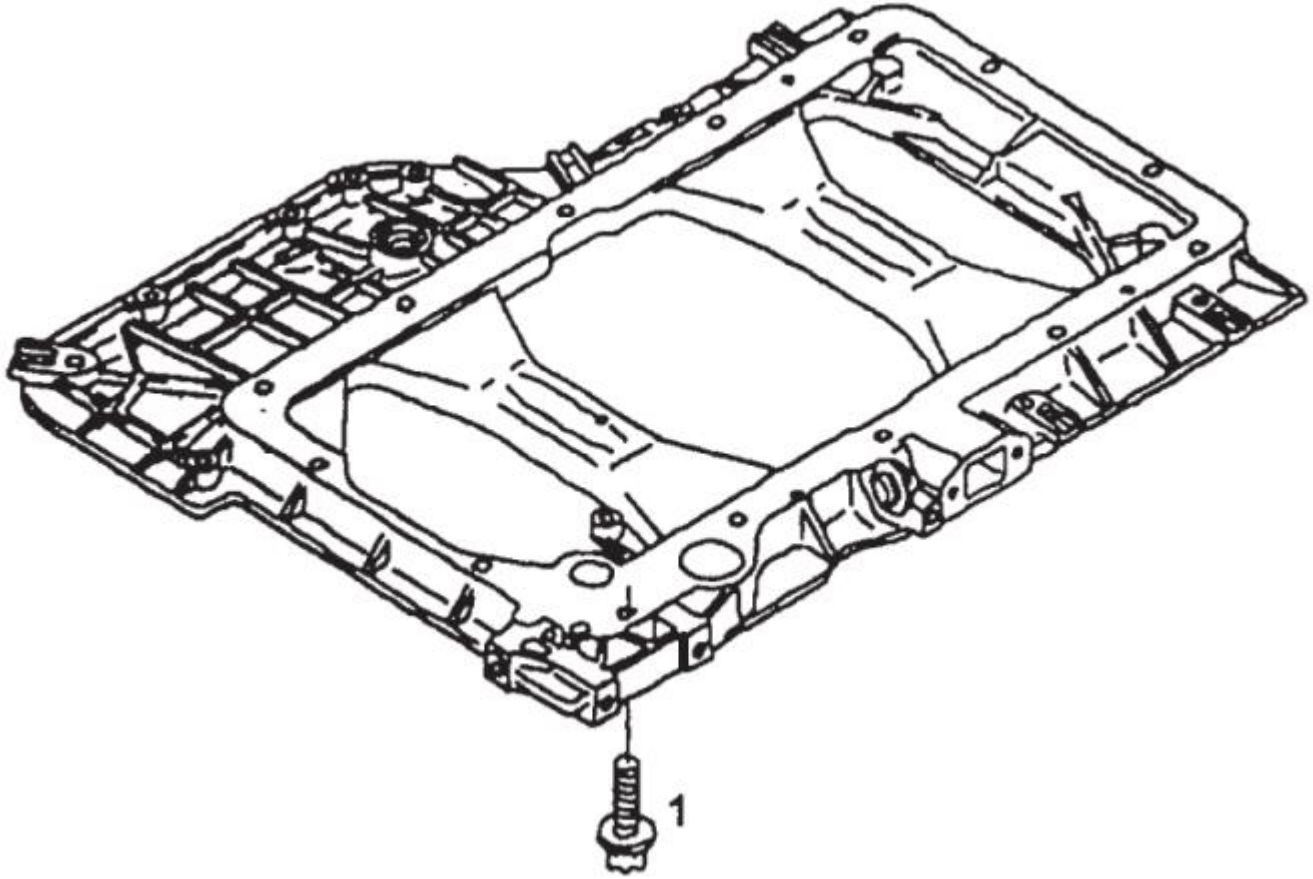

MOUNTING OIL SUMP ON CRANKCASE YOKE

Diagram No. 30

SR	PART NO.	DESCRIPTION	QTY	APPLICABLE MODEL	REMARKS
1	64.90030-0010	SCREW B M8X40-8.8-MAN183-PHR DIN 34801	12	COMMON FOR ALL MODELS	06.03221-0609 ALTERNATE

OIL FILLER PIPE

Diagram No. 31

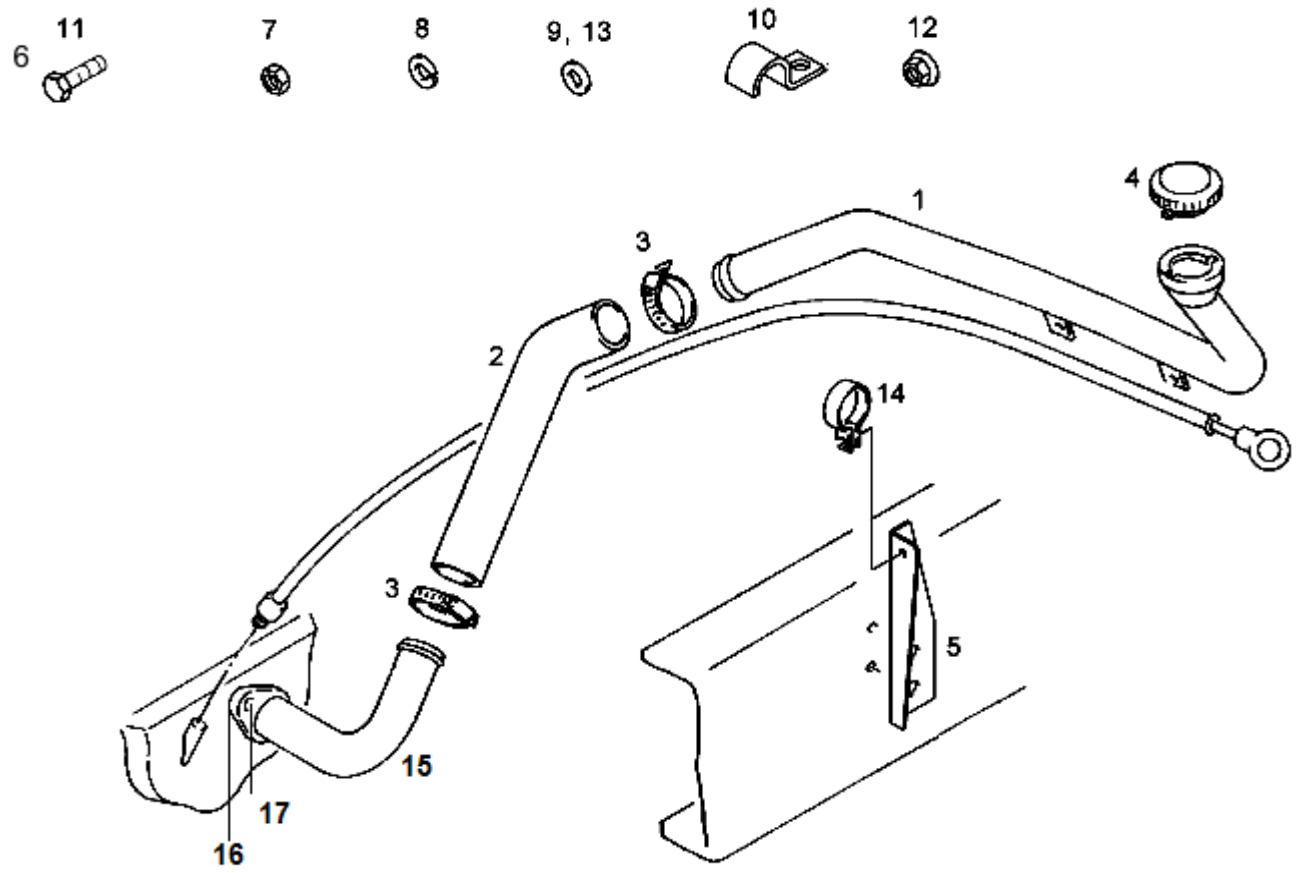

OIL FILLER PIPE

Diagram No. 31

SR	PART NO.	DESCRIPTION	QTY	APPLICABLE MODEL	REMARKS
1	64.05807-0001	OIL FILLING PIPE	1	COMMON FOR ALL MODELS	
2	64.96330-0014	HOSE (ENGINE OIL FILLING)	1	COMMON FOR ALL MODELS	
3	64.97445-0032	WORM DRIVE HOSE CLIP (42-55)- KLIPCO	2	COMMON FOR ALL MODELS	
4	64.01811-0002	CAP WITH KEYS	1	COMMON FOR ALL MODELS.NOT SERVICED SEPARATELY	USE 64.97100-6004
5	64.41710-0175	BKT. FOR OIL FILLING PIPE ON CHASSIS	1	COMMON FOR ALL MODELS	
6	64.90020-0243	HEX HEAD BOLT M6X30 DIN933-8.8 A3C	2	COMMON FOR ALL MODELS	
7	64.90501-0036	HEX NUT M6X1.00 DIN934-8 A3C	2	COMMON FOR ALL MODELS	
8	64.90801-0046	SPRING WASHER B6 DIN127 A3C	2	COMMON FOR ALL MODELS	
9	64.90710-0025	PLAIN WASHER A6.4 DIN125-ST A3C	2	COMMON FOR ALL MODELS	
10	64.97122-0015	PIPE CLAMP A12 MAN 194	3	COMMON FOR ALL MODELS	
11	64.90020-0087	HEX HEAD SCREW M6X16 DIN933-8.8 A3C	3	COMMON FOR ALL MODELS	
12	06.11240-0403	HEX. NUT BM6-8 MAN183-B1 M711260	3	COMMON FOR ALL MODELS	
13	64.90710-0025	PLAIN WASHER A6.4 DIN125-ST A3C	6	COMMON FOR ALL MODELS	
14	64.97420-0004	OIL PIPE HOLDING CLAMP (ON CHASSIS)	1	COMMON FOR ALL MODELS	
15	51.05807-0011	OIL FILLING PIPE M/C	1	COMMON FOR ALL MODELS EXCEPT MODELS WITH 180 HP ENGINES.	
15	51.01810-0048	OIL FILLING NECK M/C	1	COMMON FOR MODELS WITH 180 HP ENGINES ONLY	
16	64.96601-0018	GASKET	1	COMMON FRO ALL MODELS EXCEPT MODELS WITH 180 HP ENGINES.	
16	64.01908-0001	GASKET	1	COMMON FOR MODELS WITH 180 HP ENGINES ONLY	

17	64.90020-0097	HEX HEAD SCREW M8X30 DIN933-8.8 PHR	2	COMMON FOR ALL MODELS	
17	64.90710-0026	PLAIN WASHER A8.4 DIN125-ST A3C	2	COMMON FOR ALL MODELS	
Page No. 31		**REVISION NO. 001**			**VERSION: 001**

OIL DIPSTICK WITH TUBE

Diagram No. 32

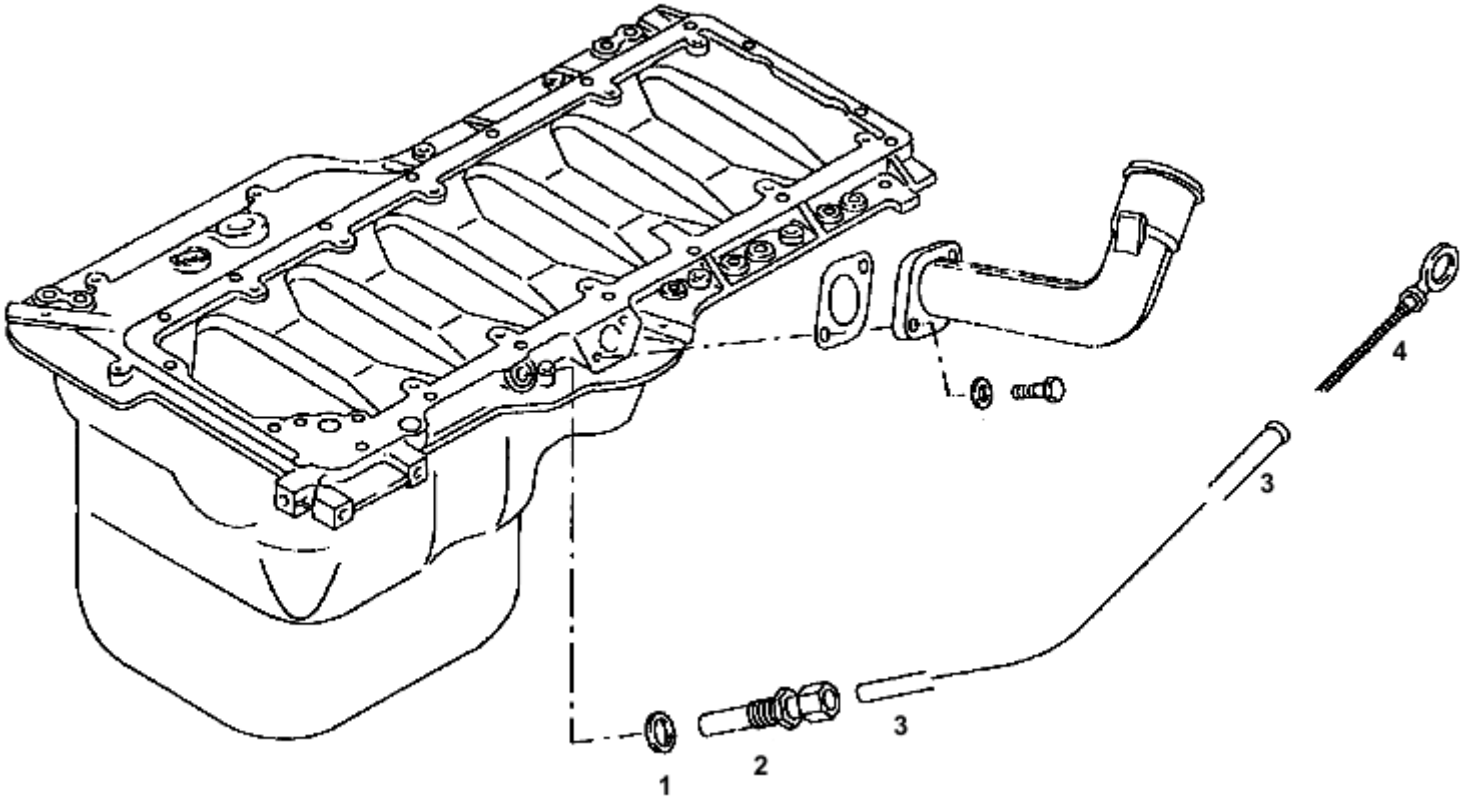

OIL DIPSTICK WITH TUBE

Diagram No. 32

SR	PART NO.	DESCRIPTION	QTY	APPLICABLE MODEL	REMARKS
1	06.56631-0106	SEALING RING BS-14,7X22,O-ST TPMI-80	1	COMMON FOR MODELS WITH 220,280 & 300 HP ENIGNES.	
2	51.98181-0004	ASSY DIPSTICK ADAPTOR	1	COMMON FOR MODELS WITH 220,280 & 300 HP ENIGNES.	
2	51.98181-0003	ASSY DIPSTICK ADAPTOR	1	COMMON FOR MODELS WITH 180 HP ENGINES ONLY	
3	64.05806-5001	ASSY GUIDING TUBE	1	COMMON FOR MODELS WITH 220,280 & 300 HP ENIGNES.	
3	64.05806-5002	ASSY GUIDING TUBE	1	COMMON FOR MODELS WITH 180 HP ENGINES ONLY	
4	64.05805-5003	ASSLY OIL DIPSTICK (21-26 LTRS)	1	COMMON FOR MODELS WITH 220,280 & 300 HP ENIGNES.	
4	64.05805-5001	ASSY OIL DIPSTICK (11-15 LTRS)	1	COMMON FOR MODELS WITH 180 HP ENGINES ONLY	

OIL FILLER HEAD, OIL FILTER AND OIL COOLER

Diagram No. 33

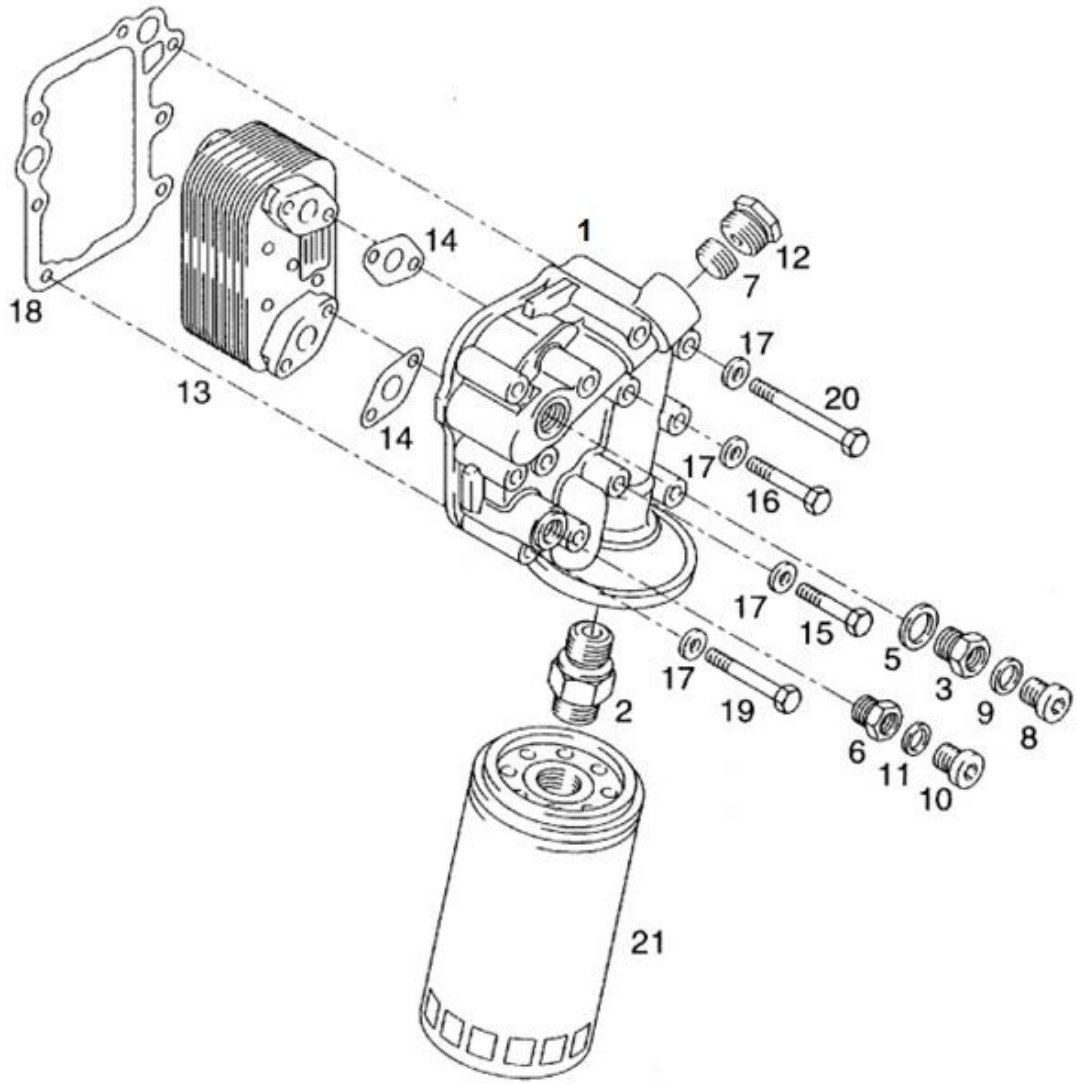

OIL FILLER HEAD, OIL FILTER AND OIL COOLER

Diagram No. 33

SR	PART NO.	DESCRIPTION	QTY	APPLICABLE MODEL	REMARKS
1	51.05503-0098	OIL FILTER HEAD M/C	1	COMMON FOR ALL MODELS	SUPERCEDED BY 64.05503-0104
2	64.98130-0006	THREADED PART	1	COMMON FOR ALL MODELS	SUPERCEDED BY 64.98130-0743
3	64.98130-0004	THREADED PART M24X1.5-M18X1.5	1	COMMON FOR ALL MODELS	
5	06.56631-0111	SEALING RING BS24.7X32.0-ST /FPM 1-80	1	COMMON FOR ALL MODELS	
6	64.92010-0001	THREADED BUSH M24X1.5-M18X1.5	1	COMMON FOR ALL MODELS	
7	64.90310-0007	LOCKING BOLT M24X1.5-ST-ZNPHR3F DIN 906	1	COMMON FOR ALL MODELS	
8	64.90490-0037	LOCKING BOLT M18X1.5-ST-A3C DIN 908	1	COMMON FOR ALL MODELS	
9	06.56631-0109	SEALING RING BS18.7X26.0-ST /FPM 1-80	1	COMMON FOR ALL MODELS	
10	64.90490-0042	LOCKING BOLT M18X1.5-ST-A3C DIN 7604	1	COMMON FOR ALL MODELS	
11	06.56631-0109	SEALING RING BS18.7X26.0-ST /FPM 1-80	1	COMMON FOR ALL MODELS	
12	64.98130-0001	SCREW FITTING M30X1.5/18X1.5	1	COMMON FOR ALL MODELS	
13	64.05601-0003	OIL COOLER	1	COMMON FOR ALL ENGINES EXCEPT 180 HP ENGINES	SUPERCEDED BY 64.05601-0195
13	64.05601-0002	OIL COOLER	1	COMMON FOR 180 HP ENGINES ONLY	
14	64.96601-0017	GASKET FOR OIL COOLER	2	COMMON FOR ALL MODELS	
15	64.90030-0011	SCREW B M8X45-8.8-MAN183 PHR DIN 34801	2	COMMON FOR ALL MODELS	
16	64.90030-0012	SCREW B M8X55-8.8-MAN183 PHR DIN 34801	2	COMMON FOR ALL MODELS	
17	64.90710-0077	WASHER 8.4 DIN125-200HV MAN183-B1	11	COMMON FOR ALL MODELS	
18	64.05901-0001	GASKET FOR OIL FILTER HEAD	1	COMMON FOR ALL MODELS	

19	64.90030-0013	SCREW B M8X65-8.8-MAN183 PHR DIN 34801	3	COMMON FOR ALL MODELS	
20	64.90030-0014	SCREW B M8X95-8.8-MAN183 PHR DIN 34801	4	COMMON FOR ALL MODELS	
21	64.05501-7001	SPIN ON FILTER	1	COMMON FOR ALL MODELS	SUPERCEDED BY 64.05501-7227
Page No. 33		**REVISION NO. 01/08/16**			**VERSION: 001**

OIL PUMP **Diagram No. 34**

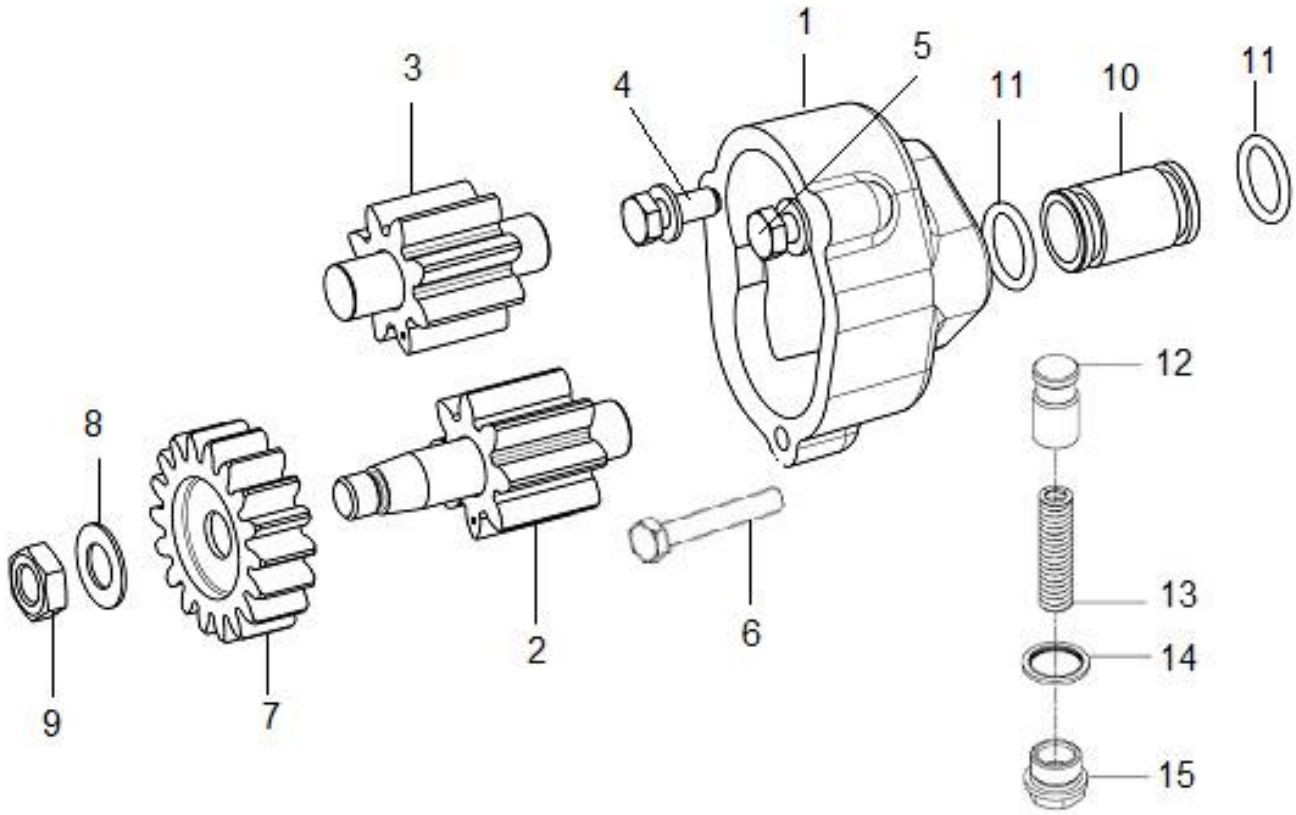

OIL PUMP

Diagram No. 34

SR	PART NO.	DESCRIPTION	QTY	APPLICABLE MODEL	REMARKS
A	64.05100-6004	ASSY LUB OIL PUMP (D0836)	1	COMMON FOR ALL ENGINES EXCEPT 2VCR,4VCR &180 HP ENGINES	
A	64.05100-6005	ASSY LUB OIL PUMP (D0836LFL13)	1	COMMON FOR 2VCR & 4VCR ENGINES ONLY	
A	64.05100-6003	ASSY LUB OIL PUMP (D0834)	1	COMMON FOR 180 HP ENGINES ONLY	
1	64.05102-0005	LUB OIL PUMP HSG (D0836)	1	COMMON FOR ALL ENGINES EXCEPT 180 HP ENGINES	
1	64.05102-0003	LUB OIL PUMP HSG (D0834)	1	COMMON FOR 180 HP ENGINES ONLY	
2	64.05104-6011	ASSLY GEAR WITH SHAFT	1	COMMON FOR ALL ENGINES EXCEPT 180 HP ENGINES	
3	64.05104-6009	ASSLY GEAR WITH SHAFT	1	COMMON FOR ALL ENGINES EXCEPT 180 HP ENGINES	
4	64.90020-0170	HEX SCREW M8X16-10.9-MAN183 PHR DIN 933	1	FOR ALL ENGINES EXCEPT 2VCR ENGINES	
5	64.90020-0229	HEX SCREW M8X20-10.9-MAN183	1	COMMON FOR ALL MODELS	
6	64.90020-0173	HEX SCREW M8X50-10.9 MAN183	1	FOR ALL ENGINES EXCEPT 2VCR ENGINES	
7	64.05201-0001	DRIVE GEAR	1	FOR ALL ENGINES EXCEPT 2 & 4VCR ENGINES	
7	51.05201-0083	DRIVE GEAR	1	COMMON FOR MODELS WITH 2 & 4 VCR ENGINES	
8	64.90801-0009	SPRING WASHER B12-ZNPHR3F DIN 137	1	COMMON FOR ALL MODELS	
9	64.90501-0050	HEX NUT M12X1.5-17H-ZNPHR3F DIN 936	1	COMMON FOR ALL MODELS	
10	64.05207-0001	OIL DELIVERY PIPE	1	COMMON FOR ALL MODELS	
11	64.96501-0036	O RING 19X3 B-FPM 1-70 STOFF NR MAN 308	2	COMMON FOR ALL MODELS	06.56333-4245 ALTERNATE
12	64.05410-0002	PISTON FOR PR. RELIEF VALVE	1	COMMON FOR ALL MODELS	
13	64.97601-0011	COMPRESSION SPRING FOR PR. RELIEF VALVE	1	COMMON FOR ALL MODELS	

14	06.56631-0111	SEALING RING BS24.7X32.0-ST /FPM 1-80	1	COMMON FOR ALL MODELS	
15	64.90310-0001	LOCKING BOLT M24X1.5	1	COMMON FOR ALL MODELS	

OIL SUCTION PIPE **Diagram No. 35**

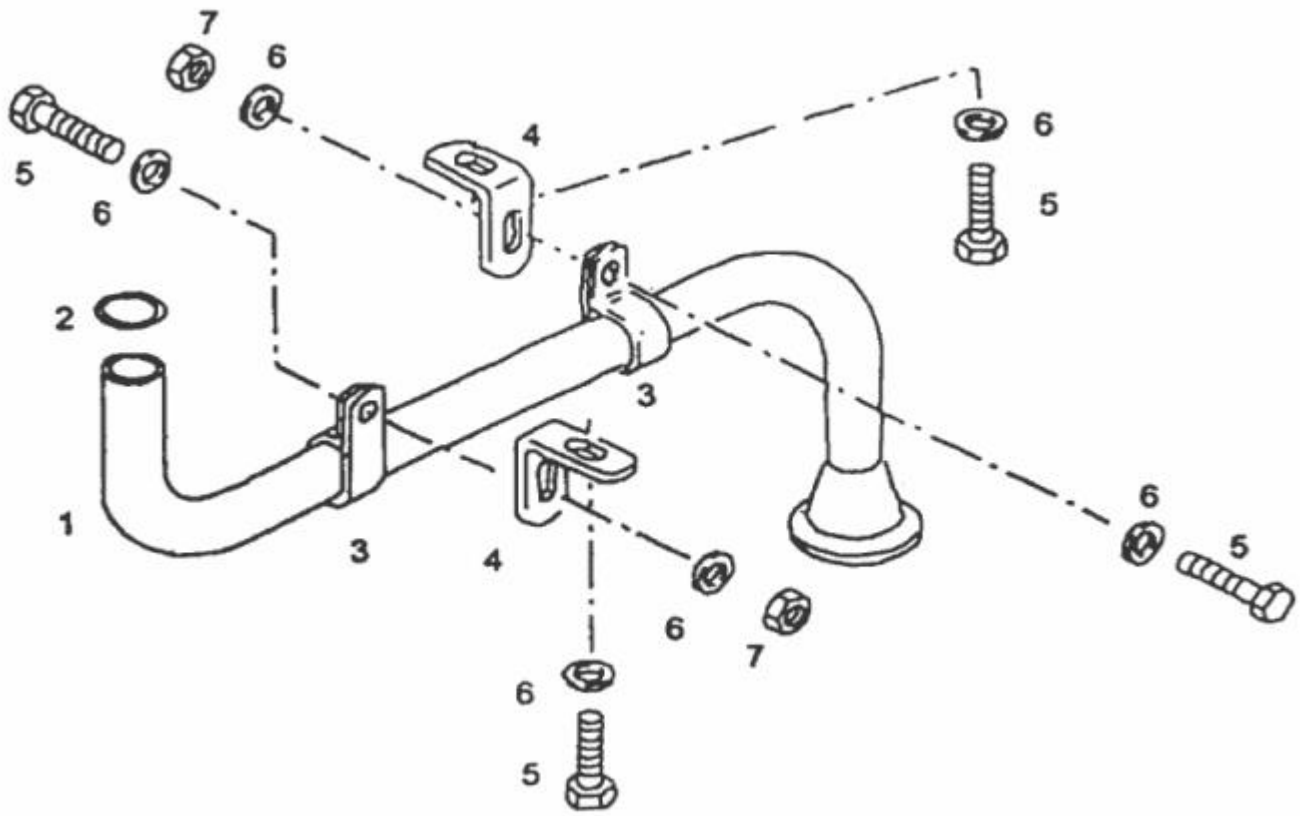

OIL SUCTION PIPE

Diagram No. 35

SR	PART NO.	DESCRIPTION	QTY	APPLICABLE MODEL	REMARKS
1	64.05703-5002	OIL SUCTION TUBE	1	FOR ALL MODELS EXCEPT MODELS WITH 180 HP ENGINES	
1	64.05703-5003	OIL SUCTION PIPE ASSY	1	COMMON FOR 180 HP ENGINES ONLY	
2	64.96501-0035	O RING 25X3 B-FPM 1-70	1	COMMON FOR ALL MODELS	06.56333-3258 ALTERNATE
3	64.97401-0014	PIPE CLAMP	2	COMMON FOR ALL MODELS	64.97401-0633 ALTERNATE
4	64.97485-0489	HOLDING ANGLE	2	COMMON FOR ALL MODELS	
5	64.90020-0093	HHS M8 X20 DIN 933-8.8	6	COMMON FOR ALL MODELS	COMMON FOR ALL ENGINES
6	64.90710-0026	PL WASHER A8.4 DIN125-ST	6	COMMON FOR ALL MODELS	COMMON FOR ALL ENGINES
7	64.90501-0037	HEX NUT M8X1.25 DIN 934-8	2	COMMON FOR ALL MODELS	COMMON FOR ALL ENGINES

WATER PUMP PIPING (2 & 4 VCR)

Diagram No. 36

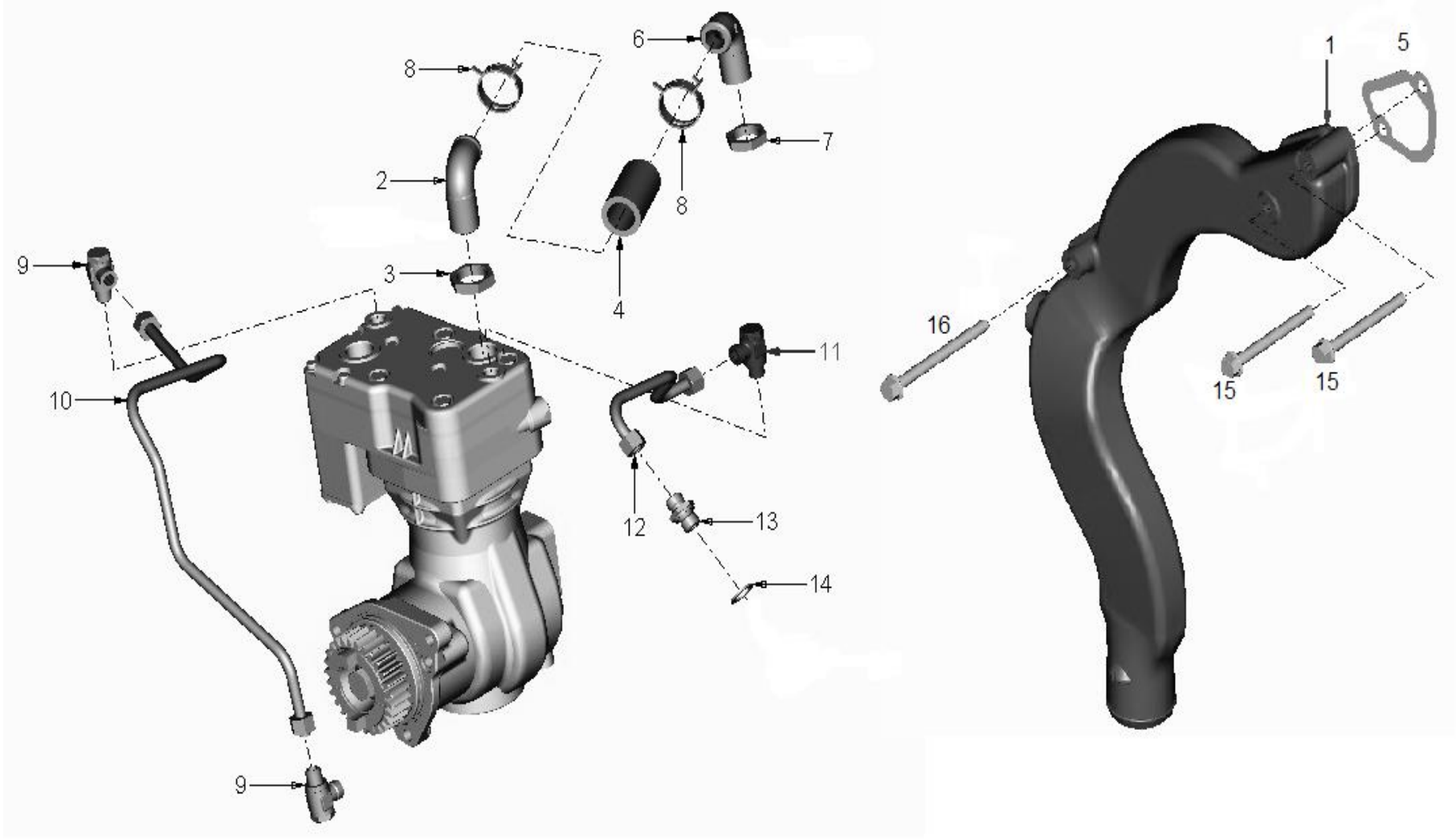

WATER PUMP PIPING (2 & 4 VCR) Diagram No. 36

SR	PART NO.	DESCRIPTION	QTY	APPLICABLE MODEL	REMARKS
1	64.06303-0160	COOLANT PIPE (FROM RADIATOR)	1	COMMON FOR 2 & 4 VCR ENGINES ONLY	
2	64.54120-6004	ASSY SUCTION MANIFOLD	1	COMMON FOR 2 VCR ENGINES ONLY	
3	64.90801-0001	HEX NUT M30X1.5	1	COMMON FOR 2 VCR ENGINES ONLY	
4	64.96330-0040	HOSE-AIR COMPRES.INLET	1	COMMON FOR 2 & 4 VCR ENGINES ONLY	SUPERCEDED BY 64.96330-0025
5	51.06903-0059	GASKET- COOLANT PIPE	1	COMMON FOR 2 & 4 VCR ENGINES ONLY	
6	64.54120-6002	AIR COMPRESSOR INTAKE ELBOW	1	COMMON FOR 2 VCR ENGINES ONLY	
7	64.90801-0001	HEX NUT M30X1.5	1	COMMON FOR 2 VCR ENGINES ONLY	
8	64.97445-0023	SPRING BAND CLAMP 35X12	2	COMMON FOR 2 & 4 VCR ENGINES ONLY	
9	51.98110-0235	CONNECTOR WATER CONNECTION	2	COMMON FOR 2 & 4 VCR ENGINES ONLY	
10	64.06303-5007	COOLANT LINE –COOLANT PUMP TO COMP	1	COMMON FOR 2 & 4 VCR ENGINES ONLY	
11	51.98110-0235	CONNECTOR WATER CONNECTION	1	COMMON FOR 2 & 4 VCR ENGINES ONLY	
12	64.06303-5008	COOLANT LINE –COMP. TO THERMOSTAT	1	COMMON FOR 2 & 4 VCR ENGINES ONLY	
13	64.98001-0004	PIPE FITTING M16X1.5-M16X1.5(ADAPTOR)	1	COMMON FOR 2 & 4 VCR ENGINES ONLY	
14	06.56631-0107	SEALING RING BS-16,7X24,0-ST FPM1-80	1	COMMON FOR 2 & 4 VCR ENGINES ONLY	
15	64.90030-0044	FLANGE BOLT M8X80-10.9	2	COMMON FOR 2 & 4 VCR ENGINES ONLY	
16	64.90020-0452	FLANGE BOLT M8X95	1	COMMON FOR 2 & 4 VCR ENGINES ONLY	

OIL SUMP AND CRANKCASE YOKE

Diagram No. 37

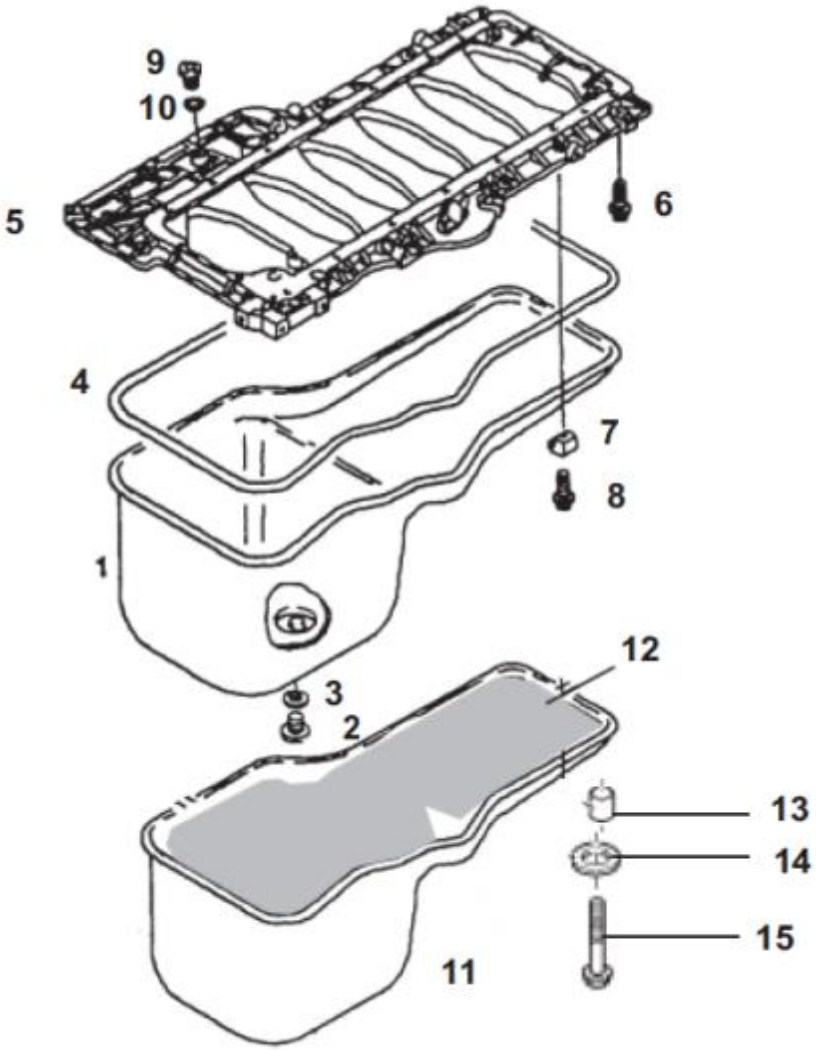

OIL SUMP AND CRANKCASE YOKE

Diagram No. 37

SR	PART NO.	DESCRIPTION	QTY	APPLICABLE MODEL	REMARKS
1	64.05801-6002	OIL SUMP ASSEMBLY	1	COMMON FOR ALL MODELS EXCEPT MODELS WITH 180 HP ENGINES	SUPERCEDED BY 64.05801-5860
1	64.05801-6003	OIL SUMP ASSY (D0834) COMPLETE	1	COMMON FOR MODELS WITH 180 HP ENGINES ONLY	64.05801-6004 ALTERNATE
2	64.90490-0035	DRAIN PLUG M22 X 1.5	1	COMMON FOR ALL MODELS	
3	06.56631-0110	SEALING RING B22.7 X 30	1	COMMON FOR ALL MODELS	SUPERCEDED BY 06.56631-0239
4	64.05904-0001	GASKET FOR OIL SUMP	1	COMMON FOR ALL MODELS EXCEPT MODELS WITH 180 HP ENGINES	51.05904-0195 ALTERNATE
4	64.05901-0002	GASKET FOR OIL SUMP	1	COMMON FOR MODELS WITH 180 HP ENGINES ONLY	
5	51.01108-0084	CRANKCASE YOKE	1	COMMON FOR ALL MODELS EXCEPT MODELS WITH 180 HP ENGINES	
5	51.01108-0082	CRANK CASE COVER BOTTOM –M/C	1	COMMON FOR MODELS WITH 180 HP ENGINES ONLY	
6	64.90030-0010	SCREW B M8X40-8.8-MAN183-PHR DIN 34801	19	COMMON FOR ALL MODELS	06.03221-0609 ALTERNATE
7	64.05840-0001	RETAINER FOR OIL SUMP	12	COMMON FOR ALL MODELS	SUPERCEDED BY 64.05840-0157
8	64.90030-0010	SCREW B M8X40-8.8-MAN183-PHR DIN 34801	12	COMMON FOR ALL MODELS	06.03221-0609 ALTERNATE
9	64.90490-0037	LOCKING BOLT M18X1.5-ST-A3C DIN 908	1	COMMON FOR ALL MODELS	
10	06.56631-0109	SEALING RING BS18.7X26.0-ST /FPM 1-80	1	COMMON FOR ALL MODELS	
11	64.19220-0009	OIL SUMP COVER (6CYL)	1	COMMON FOR MODELS WITH 280 HP ENGINES (VP 44 & 2VCR), MODELS WITH 220 HP BS III ENGINE WITH VP 44 FIP & ALL BS II MODELS	SUPERCEDED BY 64.19220-0189

11	64.19220-0007	OIL SUMP COVER (4CYL)	1	COMMON FOR MODELS WITH 180 HP ENGINES ONLY	
12	51.19220-0114	ABSORBER MAT	1	COMMON FOR ALL MODELS EXCEPT MODELS WITH 180 HP ENGINE & 220 HP BS III ENGINES WITH VE 6 FIP.	
12	51.19220-0103	ABSORBER MAT	1	COMMON FOR MODELS WITH 180 HP ENGINES ONLY	
13	64.05840-0003	DISTANCE PIECE	4	COMMON FOR ALL MODELS EXCEPT MODELS WITH 220 HP ENGINE WITH VE6 BS III FIP	
14	64.05823-0001	RUBBER GROMMET	4	COMMON FOR ALL MODELS EXCEPT MODELS WITH 220 HP ENGINE WITH VE6 BS III FIP	
15	64.90020-0249	HEX SCREW M8X50-8.8-MAN183-PHR DIN 931	3	COMMON FOR ALL MODELS EXCEPT MODELS WITH 220 HP ENGINE WITH VE6 BS III FIP	
15	64.90020-0322	HEX SCREW M8X80-8.8 DIN6921	1	COMMON FOR ALL MODELS EXCEPT MODELS WITH 220 HP ENGINE WITH VE6 BS III FIP	
15	64.90710-0070	WASHER 8-100HV A3C DIN EN ISO 7094	3	COMMON FOR ALL MODELS EXCEPT MODELS WITH 220 HP ENGINE WITH VE6 BS III FIP	
Page No. 37		**REVISION NO. 01/07/16**			**VERSION: 001**

WATER PUMP & MOUNTING (2 & 4 VCR)

Diagram No. 38

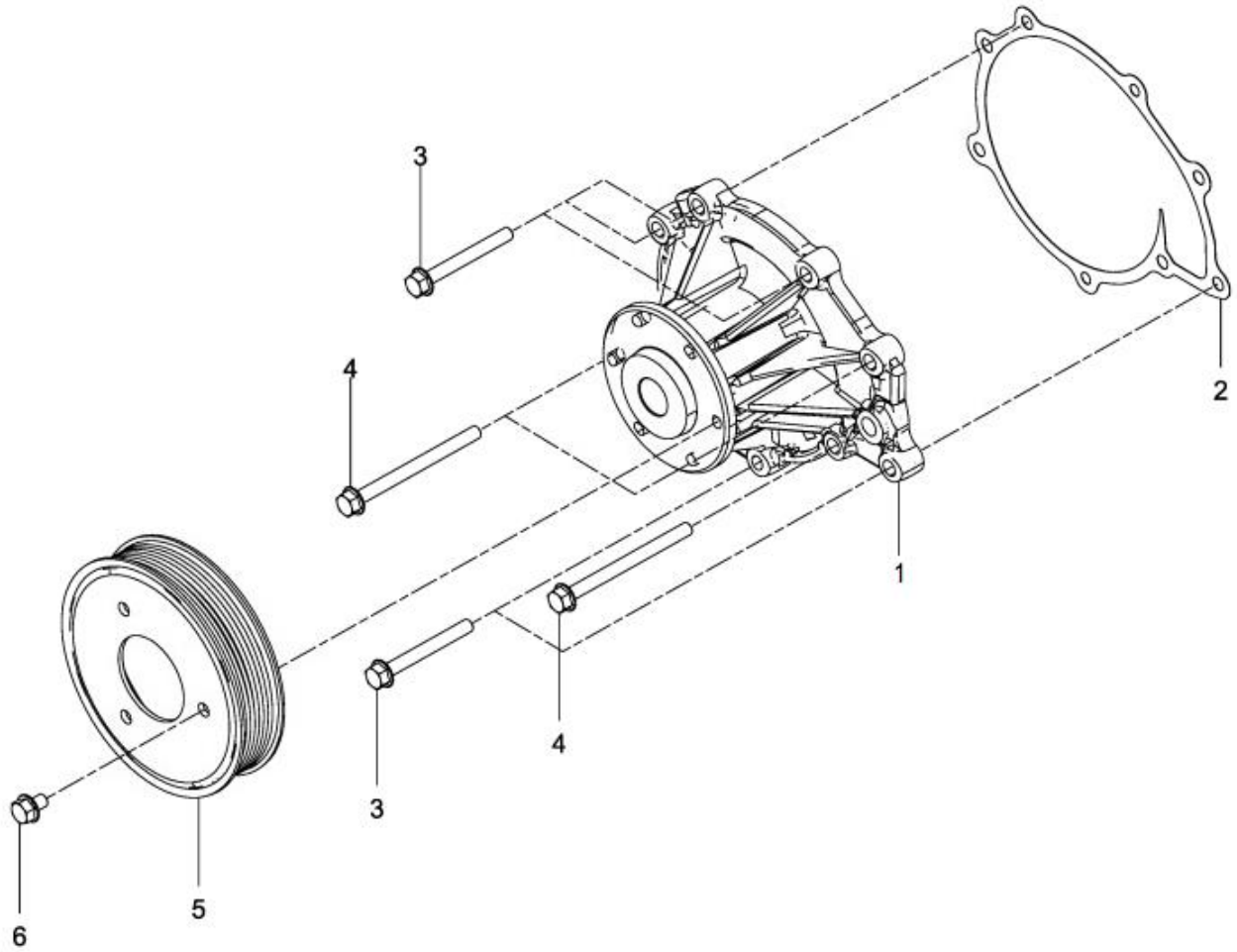

WATER PUMP & MOUNTING (2 & 4 VCR) Diagram No. 38

SR	PART NO.	DESCRIPTION	QTY	APPLICABLE MODEL	REMARKS
1	51.06500-6699	COOLANT PUMP	1	FOR 2 & 4 VCR ENGINES ONLY	51.06500-6679 ALTERNATE
2	51.06901-0196	GASKET WATER PUMP	1	FOR 2 & 4 VCR ENGINES ONLY	
3	64.90020-0453	FLANGE BOLT M8X70-10.9 MAN183B1 DIN6921	5	FOR 2 & 4 VCR ENGINES ONLY	
4	64.90030-0063	FLANGE BOLT M8X100-10.9 MAN183B1 DIN6921	3	FOR 2 & 4 VCR ENGINES ONLY	
5	64.06503-0404	PULLEY	1	FOR 2 & 4 VCR ENGINES ONLY	
6	64.90020-0093	HHS M8 X20 DIN 933-8.8 BTS:170102.20	3	FOR 2 & 4 VCR ENGINES ONLY	

CONNECTING UNION IN WATER OUTLET MANIFOLD

Diagram No. 39

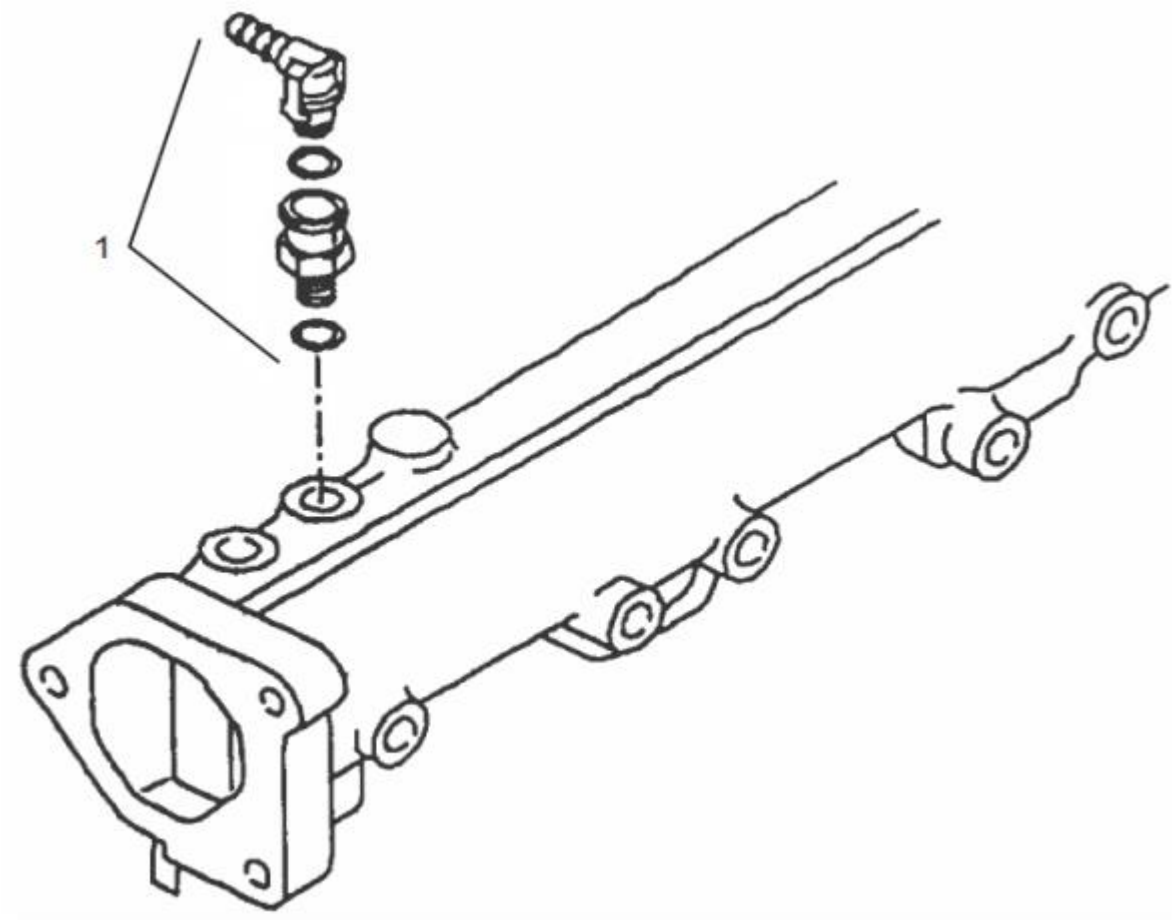

CONNECTING UNION IN WATER OUTLET MANIFOLD

Diagram No. 39

SR	PART NO.	DESCRIPTION	QTY	APPLICABLE MODEL	REMARKS
1	51.98181-6004	ANGLE SNAP CONNECTOR	1	COMMON FOR ALL MODELS	

COOLING WATER MANIFOLD M/C (2VCR)

Diagram No. 40

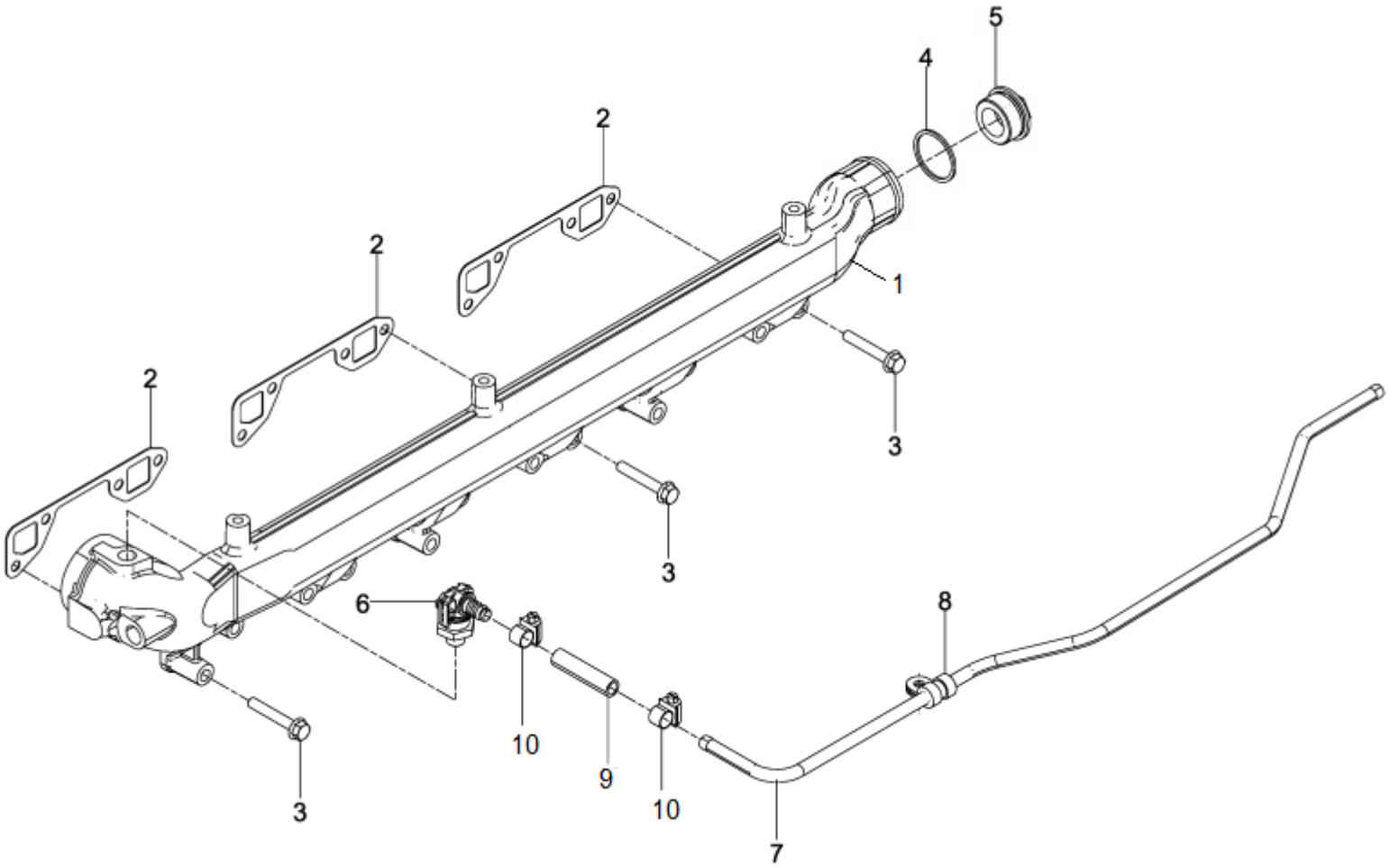

COOLING WATER MANIFOLD M/C (2VCR)

Diagram No. 40

SR	PART NO.	DESCRIPTION	QTY	APPLICABLE MODEL	REMARKS
1	64.06302-0009	COOLING WATER MANIFOLD M/C (2VCR)	1	FOR 2 VCR ENGINES ONLY	
2	64.06903-0001	GASKET FOR COOLING WATER MANIFOLD	3	FOR 2 VCR ENGINES ONLY	
3	64.90030-0009	HEX SCREW M8X50-10.9 MAN183-B1	12	FOR 2 VCR ENGINES ONLY	
4	64.91710-0029	SEALING RING A38X44-CU DIN 7603	1		
5	64.90490-0518	ADAPTOR M38 FOR DASHBOARD SENSOR	1		
6	51.98181-6004	ASSY ANGLE SNAP CONNECTOR & ADAPTOR	1		
7	64.06303-5015	PIPE DEARIATION PLUG TO SURGE TANK	1		
8	64.97445-0017	HOSE CLAMP D1-12X15 W1-2 EPDM	2		
9	64.96301-0079	HOSE PIPE(DEARIATION PIPE TO SURGE TANK)	1		
10	64.97201-0006	CLIP KLIPCO /(18-25)	2		

COOLANT PIPE WATER INLET WITH MOUNTING PARTS

Diagram No. 41

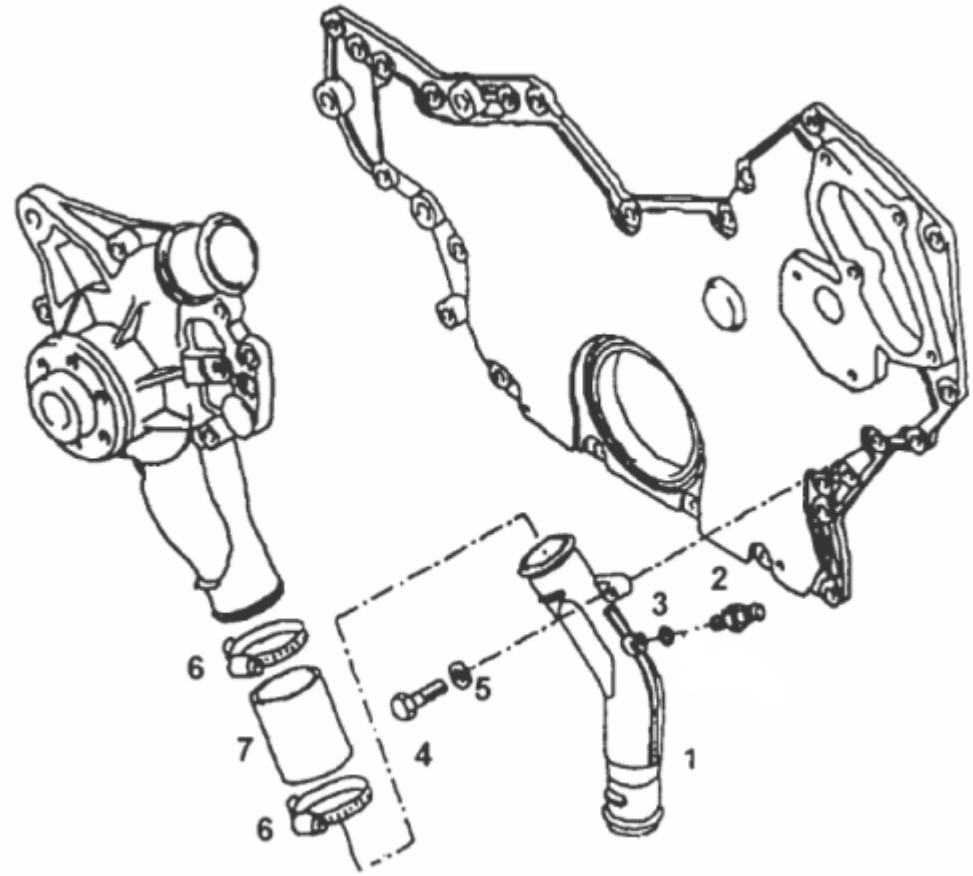

COOLANT PIPE WATER INLET WITH MOUNTING PARTS

Diagram No. 41

SR	PART NO.	DESCRIPTION	QTY	APPLICABLE MODEL	REMARKS
1	51.06302-0672	COOLANT PIPE (FROM RADIATOR)-M/C	1	FOR ALL ENGINES EXCEPT 2 & 4VCR ENGINES	
2	64.98131-0001	NOZZLE (HOSE CONNECTING PIECE)	1	FOR ALL ENGINES EXCEPT 2 & 4VCR ENGINES	
3	06.56631-0109	SEALING RING BS18.7X26.0-ST /FPM 1-80	1	FOR ALL ENGINES EXCEPT 2 & 4VCR ENGINES	
4	64.90020-0157	HEX SCREW M8X45-8.8 MAN183 PHR DIN 933	2	FOR ALL ENGINES EXCEPT 2 & 4VCR ENGINES	
5	64.90710-0026	PL WASHER A8.4 DIN125-ST BTS170202.12	2	FOR ALL ENGINES EXCEPT 2 & 4VCR ENGINES	
6	64.97122-0012	HOSE CLAMP AS64-71N (SS)	2	FOR ALL ENGINES EXCEPT 2 & 4VCR ENGINES	
7	64.96330-0005	HOSE FOR WATER PUMP CONNECTION	1	FOR ALL ENGINES EXCEPT 2 & 4VCR ENGINES	

COOLING WATER PIPE (4 CYLINDER ENGINE)

Diagram No. 42

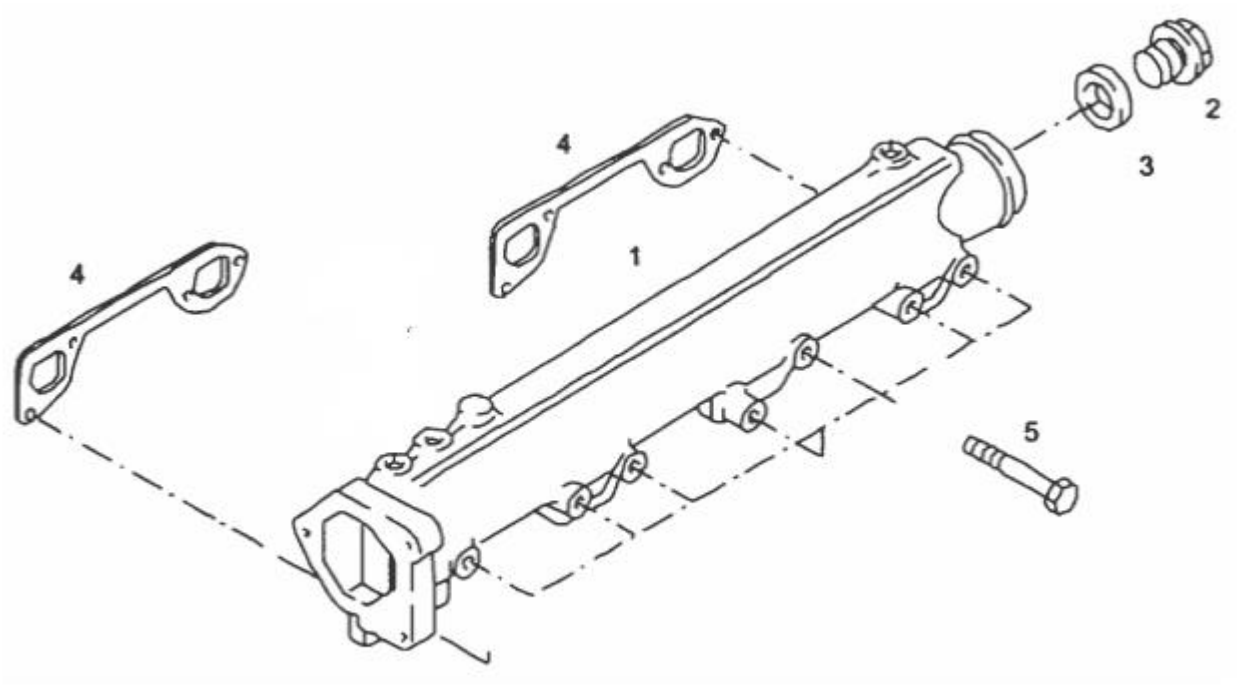

COOLING WATER PIPE (4 CYLINDER ENGINE) Diagram No. 42

SR	PART NO.	DESCRIPTION	QTY	APPLICABLE MODEL	REMARKS
1	64.06301-0002	COOLING WATER PIPE	1	FOR MODELS WITH 180 HP ENGINES	
2	64.90490-0036	DRAIN PLUG M30 X 1.5	1	FOR MODELS WITH 180 HP ENGINES	
3	64.96501-0053	SEALING WASHER	1	FOR MODELS WITH 180 HP ENGINES	06.56631-0114 ALTERNATE
4	64.06903-0001	GASKET	2	FOR MODELS WITH 180 HP ENGINES	
5	64.90030-0009	HEX. SCREW M8 X 50	8	FOR MODELS WITH 180 HP ENGINES	

AIR INTAKE MANIFOLD ASSEMBLY (2 VCR)

Diagram No. 43

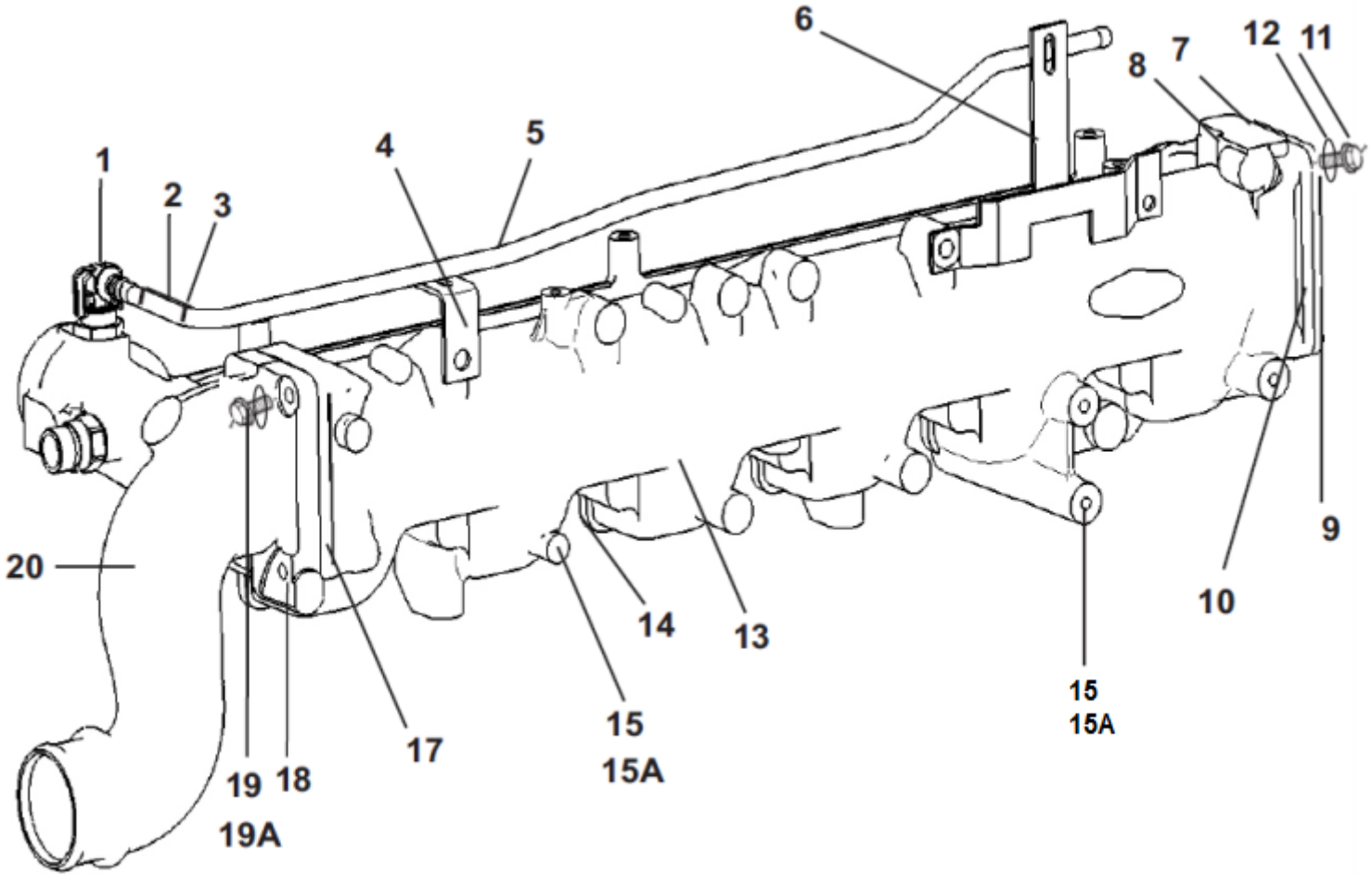

AIR INTAKE MANIFOLD ASSEMBLY (2 VCR) Diagram No. 43

SR	PART NO.	DESCRIPTION	QTY	APPLICABLE MODEL	REMARKS
1	51.98181-6004	ASSY ANGLE SNAP CONNECTOR & ADAPTOR	1	COMMON FOR ALL MODELS	
2	64.96301-0079	HOSE PIPE(DEARIATION PIPE TO SURGE TANK)	1	COMMON FOR MODELS WITH 2 VCR ENGINES ONLY	
3	64.97201-0006	CLIP KLIPCO /(18-25)	2	COMMON FOR MODELS WITH 2 VCR ENGINES ONLY	
4	64.41710-0352	L SUPPORT BKT FOR DE AERATION PIPE	1	COMMON FOR MODELS WITH 2 VCR ENGINES ONLY	
5	64.06303-5015	PIPE DE AERATION PLUG TO SURGE TANK	1	COMMON FOR MODELS WITH 2 VCR ENGINES ONLY	
6	64.41710-0407	DE AERATION PIPE SUPPORT BKT	1	COMMON FOR MODELS WITH 2 VCR ENGINES ONLY	
7	51.27421-0216	PRESSURE SENSOR	1	COMMON FOR MODELS WITH 2 VCR ENGINES ONLY	
8	06.56631-0106	SEALING RING BS-14,7X22,O-ST TPMI-80	1	COMMON FOR ALL MODELS	
9	64.08203-0001	COVER FOR INTAKE PIPE	1	COMMON FOR ALL MODELS EXCEPT MODELS WITH 180 HP ENGINES	
10	64.08902-0002	GASKET FOR INTAKE PIPE	1	COMMON FOR ALL MODELS	
11	64.90020-0095	HHS 8X25 DIN 933-8.8 BTS:170102.20	4	COMMON FOR ALL MODELS	
12	64.90710-0026	PL WASHER A8.4 DIN125-ST BTS170202.12	4	COMMON FOR ALL MODELS	
13	64.08201-0057	AIR INTAKE MANIFOLD – MACHINING	1	COMMON FOR MODELS WITH 2 VCR ENGINES ONLY	
14	64.08902-0001	GASKET – INTAKE MANIFOLD	6	COMMON FOR ALL MODELS	
15	64.90020-0242	HHB M8X70 DIN 931-8.8 BTS:170102-20	12	COMMON FOR ALL MODELS	
15A	64.90710-0026	PL WASHER A8.4 DIN125-ST BTS170202.12	12	COMMON FOR ALL MODELS	
17	64.08902-0002	GASKET FOR INTAKE PIPE	1	COMMON FOR ALL MODELS	

18	64.90020-0097	HHS M8X30 DIN 933-8.8 BTS:170102.20	2	COMMON FOR ALL MODELS	
19	64.90020-0100	HHS M8 X 40 DIN 933 – 8.8 BTS 170102.20	1	COMMON FOR ALL MODELS	
19A	64.90710-0026	PL WASHER A8.4 DIN125-ST BTS170202.12	3	COMMON FOR ALL MODELS	
20	51.09411-0640	CHARGE AIR PIPE TO INTAKE MANIFOLD-M/C	1	COMMON FOR ALL MODELS EXCEPT MODELS WITH 180 HP ENGINES	
Page No. 43		**REVISION NO. 002**			**VERSION: 002**

AIR INTAKE MANIFOLD ASSEMBLY (2 VCR)

Diagram No. 44

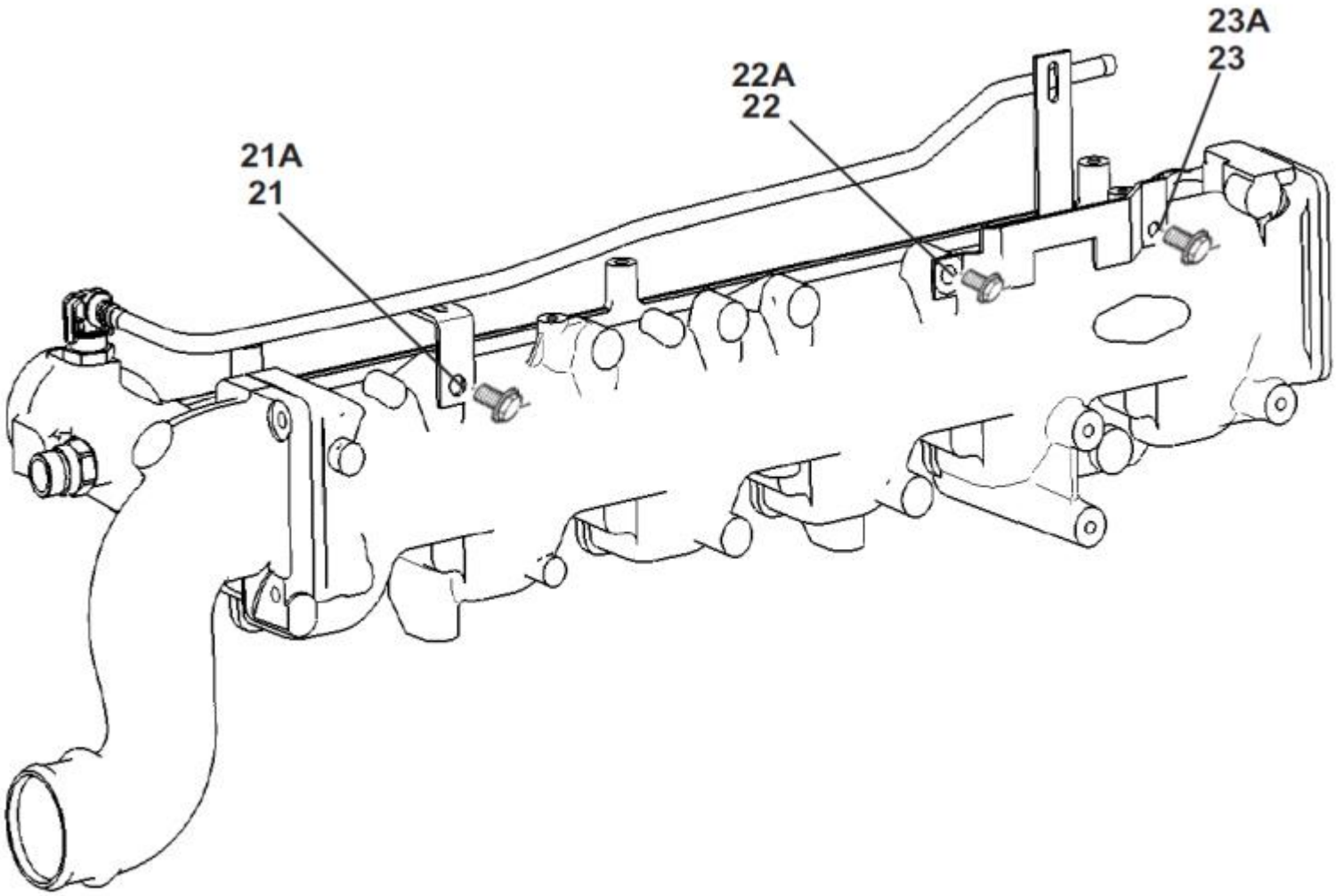

AIR INTAKE MANIFOLD ASSEMBLY (2 VCR) Diagram No. 44

S R	PART NO.	DESCRIPTION	QTY	APPLICABLE MODEL	REMARKS
21	64.90020-0197	HEX BOLT M10X25-8.8 DIN 933 MAN183-B1	1	COMMON FOR ALL MODELS EXCEPT MODELS WITH 180 HP ENGINES	
21A	64.90710-0027	PL WASHER A10.5 DIN125-ST BTS170202.12	1	COMMON FOR ALL MODELS	
22	64.90020-0197	HEX BOLT M10X25-8.8 DIN 933 MAN183-B1	1	COMMON FOR ALL MODELS EXCEPT MODELS WITH 180 HP ENGINES	
22A	64.90710-0027	PL WASHER A10.5 DIN125-ST BTS170202.12	1	COMMON FOR ALL MODELS	
23	64.90020-0152	HEX. SCREW M8X18 DIN 933-8.8 MAN183-B1	1	COMMON FOR MODELS WITH 2 VCR ENGINES ONLY	
23A	64.90710-0026	PL WASHER A8.4 DIN125-ST BTS170202.12	1	COMMON FOR ALL MODELS	

COOLING WATER PIPE ASSEMBLY

Diagram No. 45

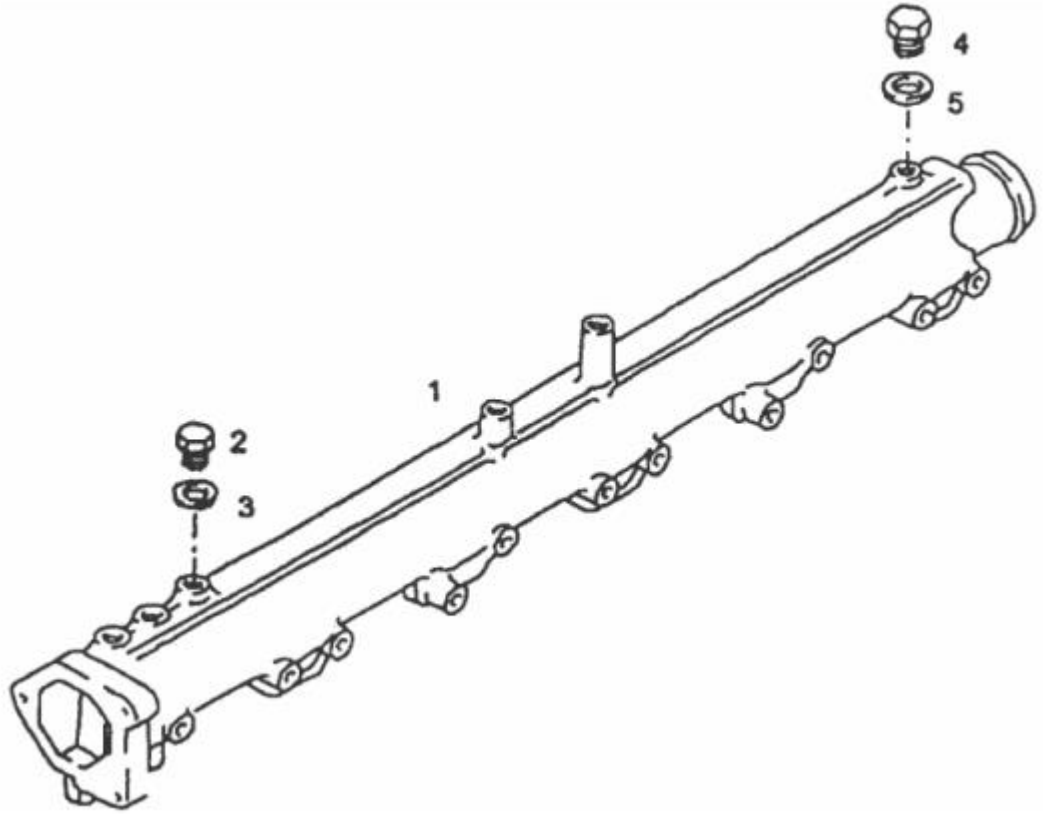

COOLING WATER PIPE ASSEMBLY

Diagram No. 45

SR	PART NO.	DESCRIPTION	QTY	APPLICABLE MODEL	REMARKS
1	64.06302-0005	COOLING WATER MANIFOLD 6 CYL. M/C	1	FOR ALL ENGINES EXCEPT 180 HP ENGINES & 2 & 4 VCR ENGINES	
2	64.90490-0041	LOCKING BOLT A-M14X1.5-ST-A3C	1	FOR ALL ENGINES EXCEPT 180 HP ENGINES & 2 & 4 VCR ENGINES	
3	06.56631-0106	SEALING RING BS-14,7X22,O-ST TPMI-80	1	FOR ALL ENGINES EXCEPT 180 HP ENGINES & 2 & 4 VCR ENGINES	
4	64.90490-0034	CLOSING PLUG M20X1.5-ST-ZNPHR3F	1	FOR ALL ENGINES EXCEPT 180 HP ENGINES & 2 & 4 VCR ENGINES	
5	06.56631-0121	SEALING RING BS20.7X28-ST-FPM1-80	1	FOR ALL ENGINES EXCEPT 180 HP ENGINES & 2 & 4 VCR ENGINES	64.96501-0054 ALTERNATE

THERMOSTAT & THERMOSTAT HOUSING VP 44 & VE6

Diagram No. 46

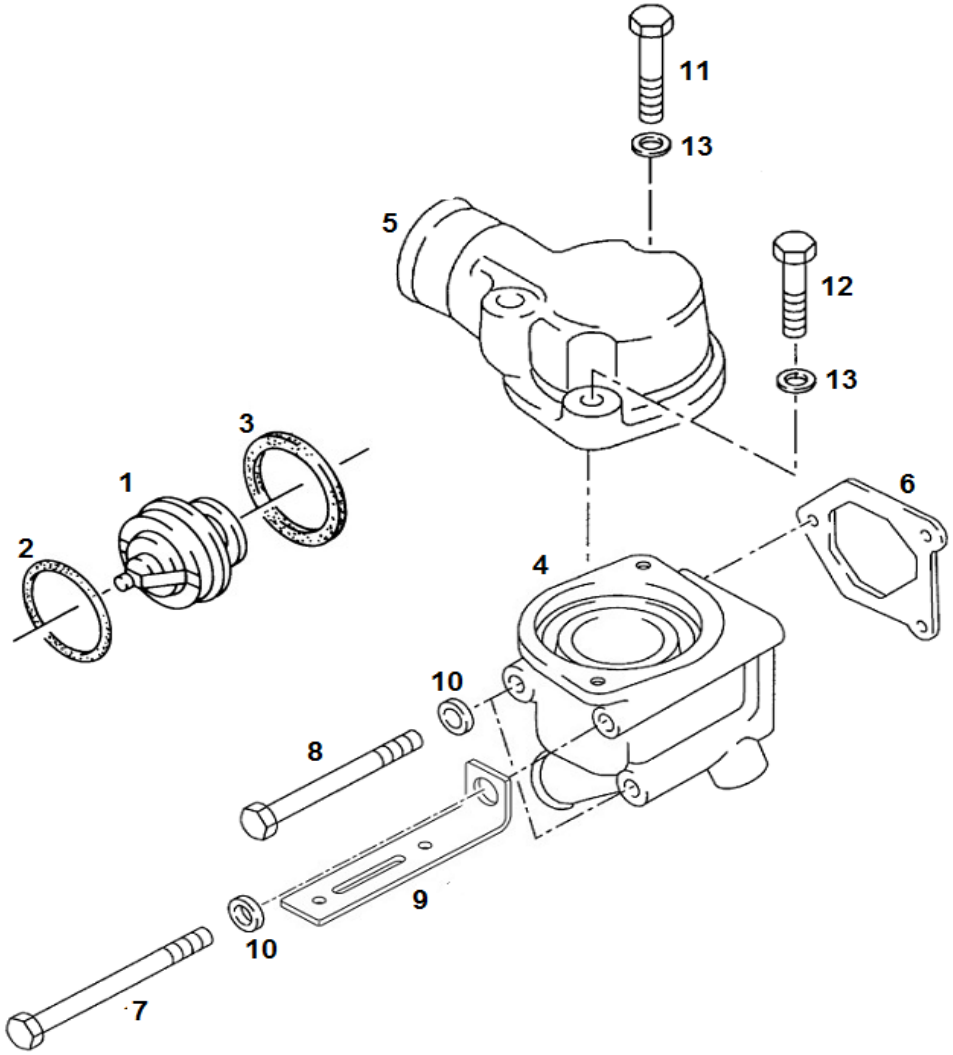

THERMOSTAT & THERMOSTAT HOUSING VP 44 & VE6 Diagram No. 46

SR	PART NO.	DESCRIPTION	QTY	APPLICABLE MODEL	REMARKS
1	51.06402-0099	THERMOSTAT ASSLY 83 DEG.	1	FOR ALL ENGINES	
2	64.96501-0040	O RING 60X40 B-NBR 3-60-M7.660.60	1	FOR ALL ENGINES	
3	51.06901-0108	THERMOSTAT COVER GASKET	1	FOR ALL ENGINES	
4	51.06404-0067	THERMOSTAT HOUSING-M/C	1	FOR ALL ENGINES EXCEPT 2 & 4 VCR ENGINES & BUS	
5	51.06404-0082	COVER FOR THERMOSTAT HOUSING -M/C	1	FOR ALL ENGINES EXCEPT 2 & 4 VCR ENGINES & BUS	
6	64.06904-0001	GASKET THERMOSTAT AFOE2-M3219	1	FOR ALL ENGINES EXCEPT 2 & 4 VCR ENGINES & BUS	
7	64.90020-0138	HEX SCREW M8X115-8.8 ZNPHR3F DIN 931	1	FOR ALL ENGINES EXCEPT 2 & 4 VCR ENGINES & BUS	
8	64.90020-0078	HEX HEAD BOLT M8X105 DIN931-8.8 PHR	2	FOR ALL ENGINES EXCEPT 2 & 4 VCR ENGINES & BUS	
9	64.41290-0277	MTG BKT FOR COMPRESSOR LINE	1	FOR ALL ENGINES EXCEPT 2 & 4 VCR ENGINES & BUS	
10	64.90710-0026	PLAIN WASHER A8.4 DIN125-ST A3C	3	FOR ALL ENGINES EXCEPT 2 & 4 VCR ENGINES & BUS	
11	64.90020-0097	HEX HEAD SCREW M8X30 DIN933-8.8 PHR	1	FOR ALL ENGINES EXCEPT 2 & 4 VCR ENGINES & BUS	
12	64.90020-0097	HEX HEAD SCREW M8X30 DIN933-8.8 PHR	1	FOR ALL ENGINES EXCEPT 2 & 4 VCR ENGINES & BUS	
13	64.90710-0026	PLAIN WASHER A8.4 DIN125-ST A3C	2	FOR ALL ENGINES EXCEPT 2 & 4 VCR ENGINES & BUS	

THERMOSTAT & THERMOSTAT HOUSING VP 44 (BUS)

Diagram No. 47

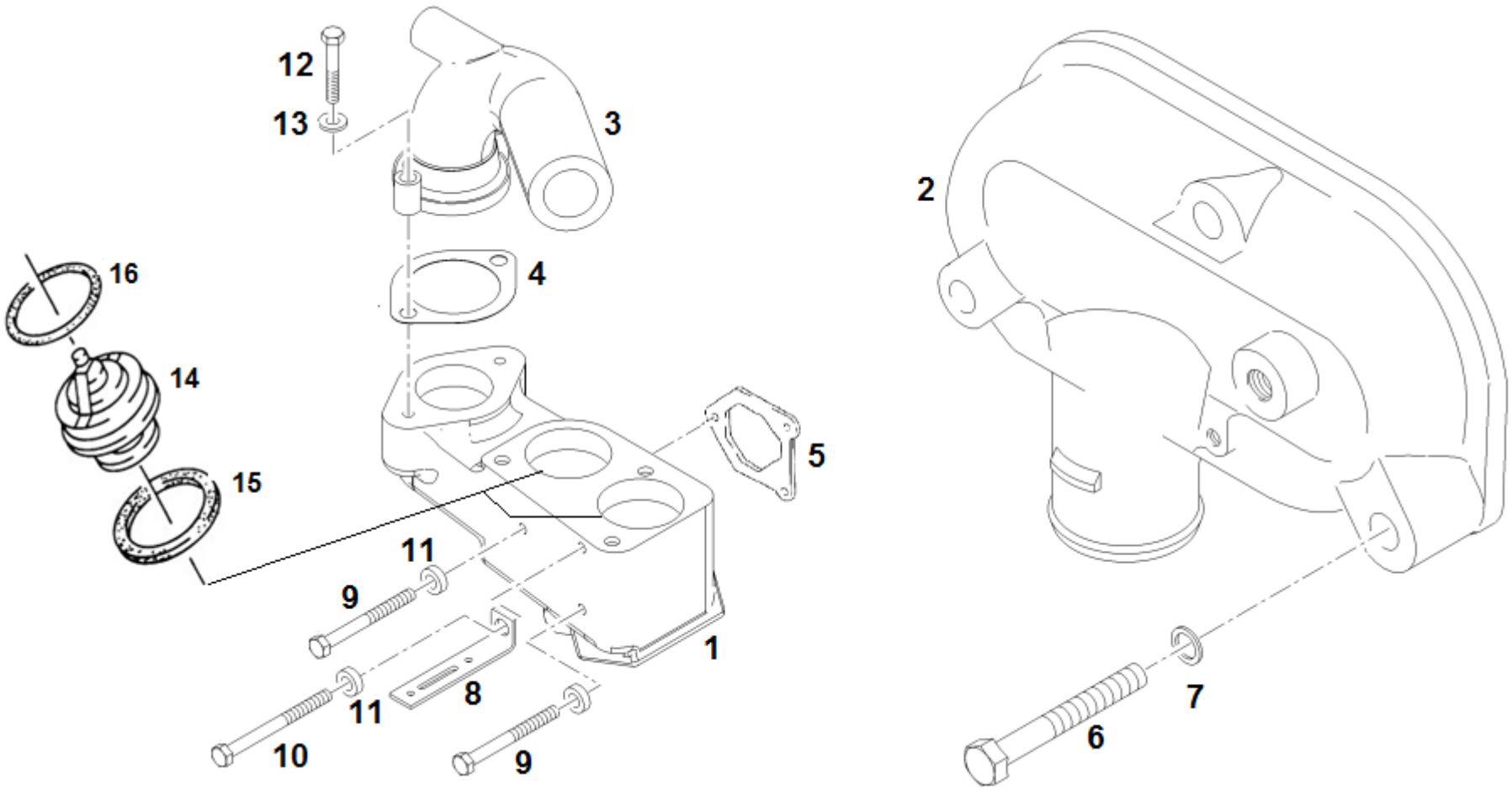

THERMOSTAT & THERMOSTAT HOUSING VP 44 (BUS) Diagram No. 47

SR	PART NO.	DESCRIPTION	QTY	APPLICABLE MODEL	REMARKS
1	64.06404-0002	THERMOSTAT HOUSING	1	FOR 220 HP BUS ENGINES WITH VP 44 FIP	
2	64.06405-0006	THERMOSTAT COVER	1	FOR 220 HP BUS ENGINES WITH VP 44 FIP	
3	64.06420-0001	ELBOW	1	FOR 220 HP BUS ENGINES WITH VP 44 FIP	
4	64.06920-0001	GASKET	1	FOR 220 HP BUS ENGINES WITH VP 44 FIP	
5	64.06904-0001	GASKET THERMOSTAT AFOE2-M3219	1	FOR 220 HP BUS ENGINES WITH VP 44 FIP	
6	64.90020-0249	HEX SCREW M8X50-8.8-MAN183-PHR DIN 931	3	FOR 220 HP BUS ENGINES WITH VP 44 FIP	
7	64.90710-0026	PLAIN WASHER A8.4 DIN125-ST A3C	3	FOR 220 HP BUS ENGINES WITH VP 44 FIP	
8	64.41290-0277	MTG BKT FOR COMPRESSOR LINE	1	FOR 220 HP BUS ENGINES WITH VP 44 FIP	
9	64.90020-0138	HEX SCREW M8X115-8.8 ZNPHR3F DIN 931	2	FOR 220 HP BUS ENGINES WITH VP 44 FIP	
10	64.90020-0078	HEX HEAD BOLT M8X105 DIN931-8.8 PHR	1	FOR 220 HP BUS ENGINES WITH VP 44 FIP	
11	64.90710-0026	PLAIN WASHER A8.4 DIN125-ST A3C	3	FOR 220 HP BUS ENGINES WITH VP 44 FIP	
12	64.90020-0099	HEX HEAD SCREW M8X35 DIN933-8.8 PHR	2	FOR 220 HP BUS ENGINES WITH VP 44 FIP	
13	64.90710-0026	PLAIN WASHER A8.4 DIN125-ST A3C	2	FOR 220 HP BUS ENGINES WITH VP 44 FIP	
14	51.06402-0099	THERMOSTAT ASSLY 83 DEG.	2	FOR ALL ENGINES	
15	51.06901-0108	THERMOSTAT COVER GASKET	2	FOR ALL ENGINES	
16	64.96501-0040	O RING 60X40 B-NBR 3-60-M7.660.60	2	FOR ALL ENGINES	

MOUNTING PARTS FOR WATER PUMPS

Diagram No. 48

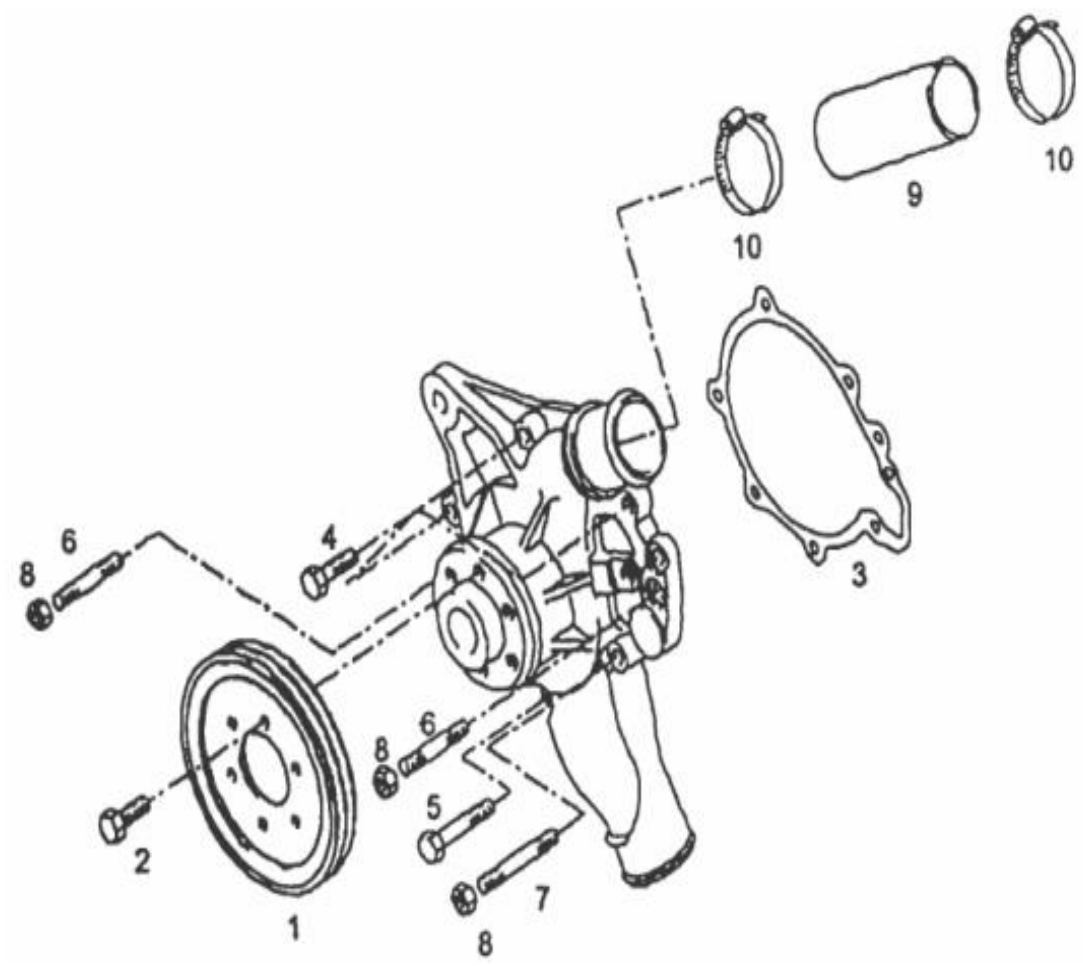

MOUNTING PARTS FOR WATER PUMPS

Diagram No. 48

SR	PART NO.	DESCRIPTION	QTY	APPLICABLE MODEL	REMARKS
1	51.06503-0380	V-BELT PULLEY FOR WATER PUMP	1	COMMON FOR ALL MODELS EXCEPT MODELS WITH 2 & 4 VCR ENGINES & BUS	SUPERSEDED BY 64.06503-0380
1	64.06503-0003	V-BELT PULLEY FOR WATER PUMP	1	COMMON FOR BUS MODEL ONLY	
2	64.90020-0093	HHS M8 X20 DIN 933-8.8 BTS:170102.20	6	COMMON FOR ALL MODELS	
3	64.06901-0001	GASKET (WATER PUMP HOUSING)	1	COMMON FOR ALL MODELS EXCEPT MODELS WITH 2 & 4 VCR ENGINES	
4	64.90020-0099	HHS M8X35 DIN 933-8.8 BTS:170102.20	3	COMMON FOR ALL MODELS EXCEPT MODELS WITH 2 & 4 VCR ENGINES	
5	64.90020-0158	HEX SCREW M8X60-8.8 MAN183 PHR	1	COMMON FOR ALL MODELS	
6	64.90201-0006	STUD M8X70-8.8 DIN 939	3	COMMON FOR ALL MODELS EXCEPT MODELS WITH 2 & 4 VCR ENGINES	
7	64.90201-0017	STUD M8X95-8.8 DIN 939	1	COMMON FOR ALL MODELS EXCEPT MODELS WITH 2 & 4 VCR ENGINES	
8	64.90501-0037	HEX NUT M8X1.25 DIN 934-8 BTS170202.22	4	COMMON FOR ALL MODELS	
9	64.96330-0023	HOSE FOR WATER PUMP CONNECTION	1	COMMON FOR ALL MODELS EXCEPT MODELS WITH 2 & 4 VCR ENGINES	
10	64.97122-0014	HOSE CLAMP AS32-39 (SS)	2	COMMON FOR ALL MODELS EXCEPT MODELS WITH 2 & 4 VCR ENGINES	

MOUNTING PARTS TO COOLING WATER PIPE

Diagram No. 49

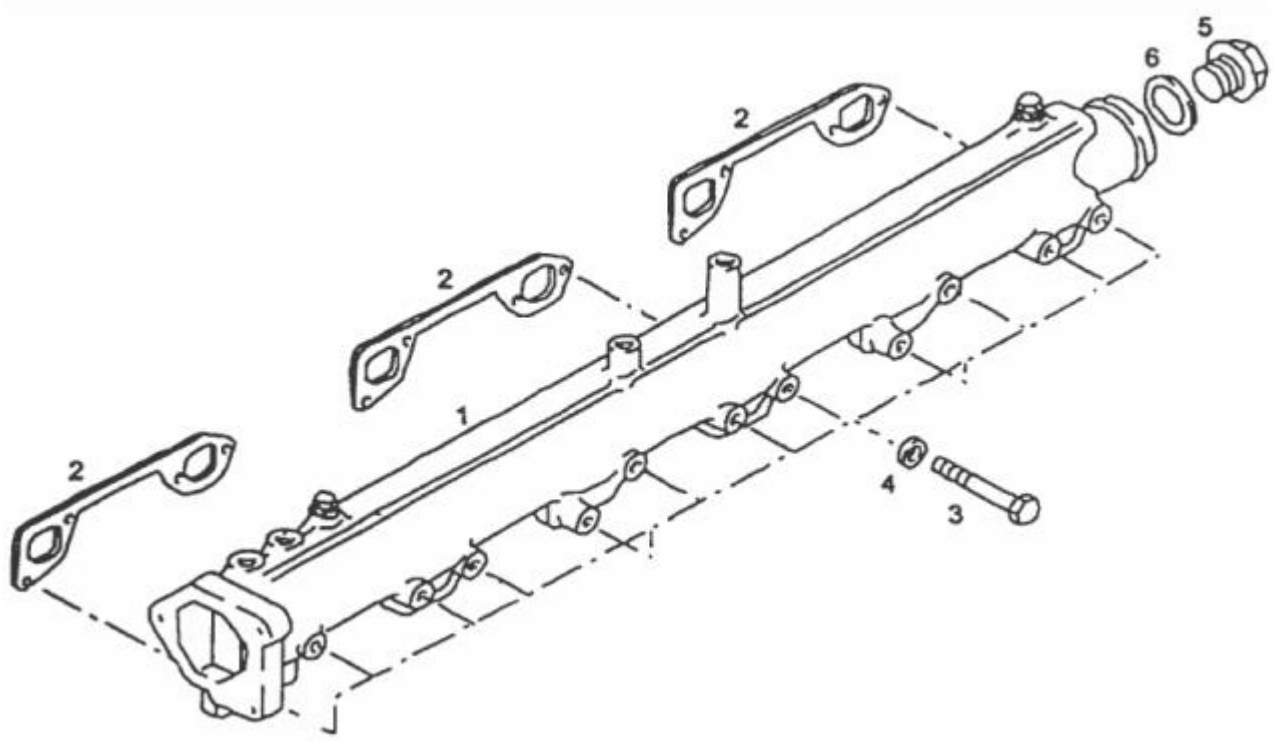

MOUNTING PARTS TO COOLING WATER PIPE

Diagram No. 49

SR	PART NO.	DESCRIPTION	QTY	APPLICABLE MODEL	REMARKS
1	64.06302-0005	COOLING WATER MANIFOLD 6 CYL. M/C	1	COMMON FOR ALL ENGINES EXCEPT 180 HP , 2 & 4VCR ENGINES	
2	64.06903-0001	GASKET FOR COOLING WATER MANIFOLD	3	COMMON FOR ALL MODELS	
3	64.90030-0009	HEX SCREW M8X50-10.9 MAN183-B1	12	COMMON FOR ALL MODELS	06.03216-8310 ALTERNATE
4	64.90710-0029	PL WASHER A13 DIN125-ST BTS170202.12	12	COMMON FOR ALL MODELS EXCEPT MODELS WITH 2 & 4VCR ENGINES	
5	64.90490-0038	CLOSING PLUG M38X1.5-ST-A3C DIN 980	1	COMMON FOR ALL MODELS EXCEPT MODELS WITH 180 HP , 2 & 4 VCR ENGINES	
6	64.91710-0029	SEALING RING A38X44-CU DIN 7603	1	COMMON FOR ALL MODELS EXCEPT MODELS WITH 180 HP , 2 & 4 VCR ENGINES	

WATER PUMP LARGE VERSION **Diagram No. 50**

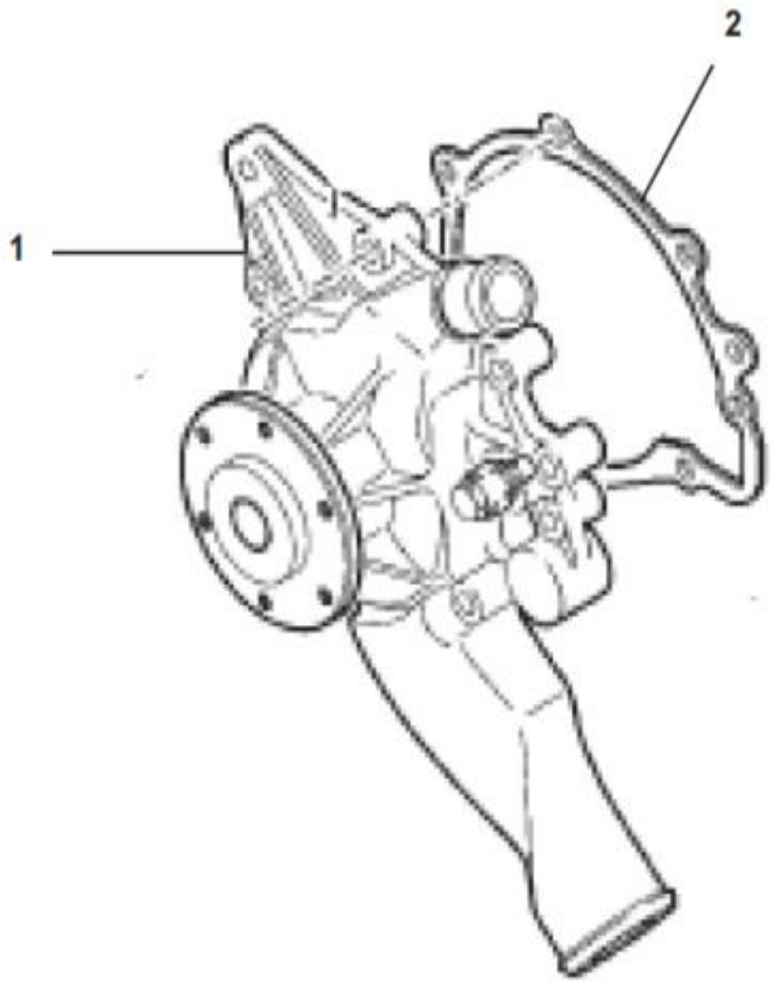

WATER PUMP LARGE VERSION

Diagram No. 50

SR	PART NO.	DESCRIPTION	QTY	APPLICABLE MODEL	REMARKS
1	64.06500-4001	ASSY WATER PUMP	1	COMMON FOR ALL MODELS EXCEPT MODELS WITH 2 & 4 VCR ENGINES	
2	64.06901-0001	GASKET (WATER PUMP HOUSING)	1	COMMON FOR ALL MODELS EXCEPT MODELS WITH 2 & 4 VCR ENGINES	
Page No. 50		**REVISION NO. 001**			**VERSION: 001**

INTERCOOLER ELBOW CHARGE-AIR PIPE ON TURBOCHARGER

Diagram No. 51

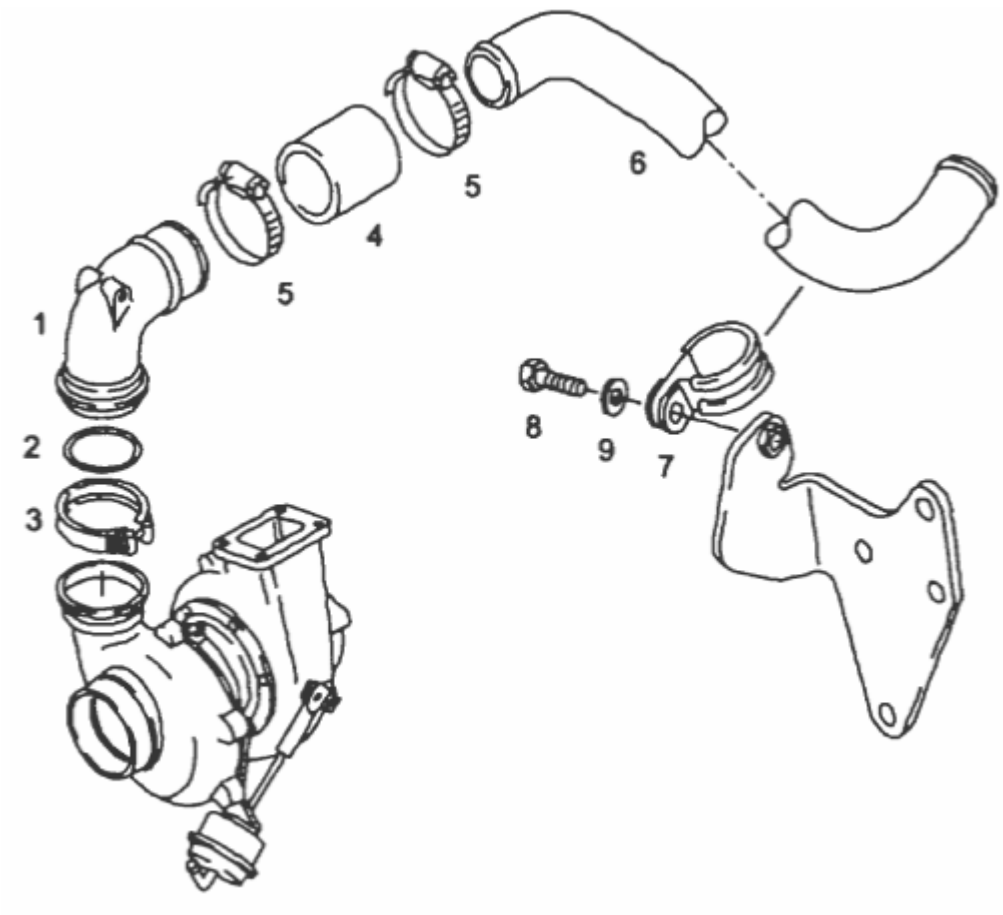

INTERCOOLER ELBOW CHARGE-AIR PIPE ON TURBOCHARGER Diagram No. 51

SR	PART NO.	DESCRIPTION	QTY	APPLICABLE MODEL	REMARKS
1	64.09411-0003	CHARGE AIR MANIFOLD (ELBOW ON TC)	1	COMMON FOR 220 HP BSIII ENGINES WITH VE6 FIP , 180 HP ENGINES, 230 HP 2 VCR & 300 HP 4 VCR ENGINES ONLY	
2	64.96501-0042	O-RING 52X3 B-FPM 1-70 M7.660.60	1	COMMON FOR MODELS WITH 220 HP WITH VE6 FIP BSIII ENGINES & MODELS WITH 180 HP ENGINES ONLY	
3	51.97445-0052	HOSE CLAMP	1	COMMON FOR MODELS WITH 220 HP WITH VE6 FIP BSIII ENGINES & MODELS WITH 180 HP ENGINES ONLY	
4	51.96301-0107	HOSE M3055-50-7LX90	1	COMMON FOR MODELS WITH 220 HP WITH VE6 FIP BSIII ENGINES & MODELS WITH 180 HP ENGINES ONLY	
5	64.97122-0013	HOSE CLAMP AS56-63 N M7.751.30	2	COMMON FOR MODELS WITH 280 HP ENGINES WITH VP 44 FIP,180 HP ENGINES,220 HP BS II ENGINES & 220 BS III ENGINES WITH VP 44 FIP ONLY	
6	64.09411-0002	CHARGE AIR PIPE (TC TO INTERCOOLER)	1	COMMON FOR MODELS WITH 180 HP ENGINES	SUPERCEDED BY 64.09411-0007
6	64.09411-0007	CHARGE AIR PIPE (TC TO INTERCOOLER)	1	COMMON FOR MODELS WITH 220 HP BS III ENGINES WITH VE6 FIP & 230 HP 2 VCR ENGINES ONLY	
6	64.09411-0001	CHARGE AIR PIPE (TC TO INTERCOOLER)	1	COMMON FOR MODELS WITH 280 HP ENGINES (VP 44 & 2VCR) , 220 HP BS II ENGINES & 220 HP BS III ENGINES WITH VP 44 FIP ONLY	
7	64.97445-0019	HOLDING CLAMP D1-50X25-W1-2-EPDM DIN3016	1	COMMON FOR ALL MODELS	
8	64.90020-0149	HEX SCREW M8X28-8.8 A2C DIN 933	1	COMMON FOR MODELS WITH 180 HP ENGINES	

8	64.90020-0093	HEX HEAD SCREW M8X20 DIN933-8.8 PHR	1	FOR 280 HP 2 VCR ENGINES ONLY	
9	64.90710-0026	PL WASHER A8.4 DIN125-ST BTS170202.12	1	COMMON FOR ALL MODELS	
Page No. 51		**REVISION NO. 001**			**VERSION: 001**

RIGID FAN WITH VISCO COUPLING AND MOUNTING PARTS

Diagram No. 52

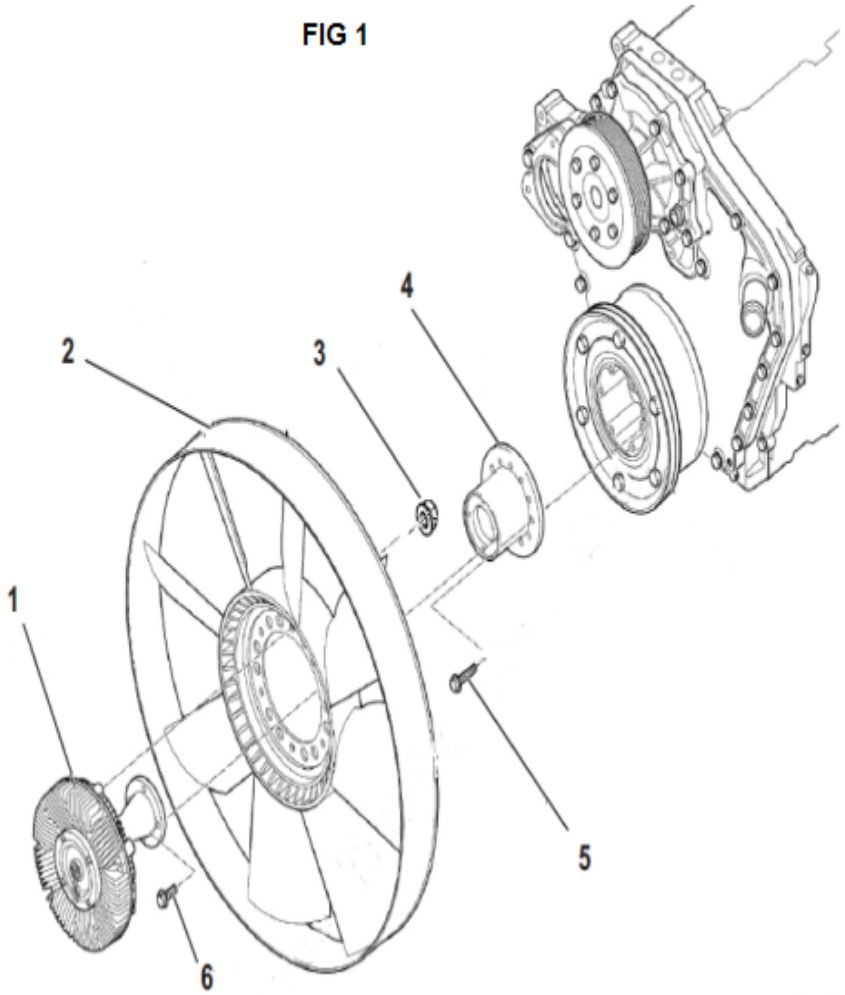

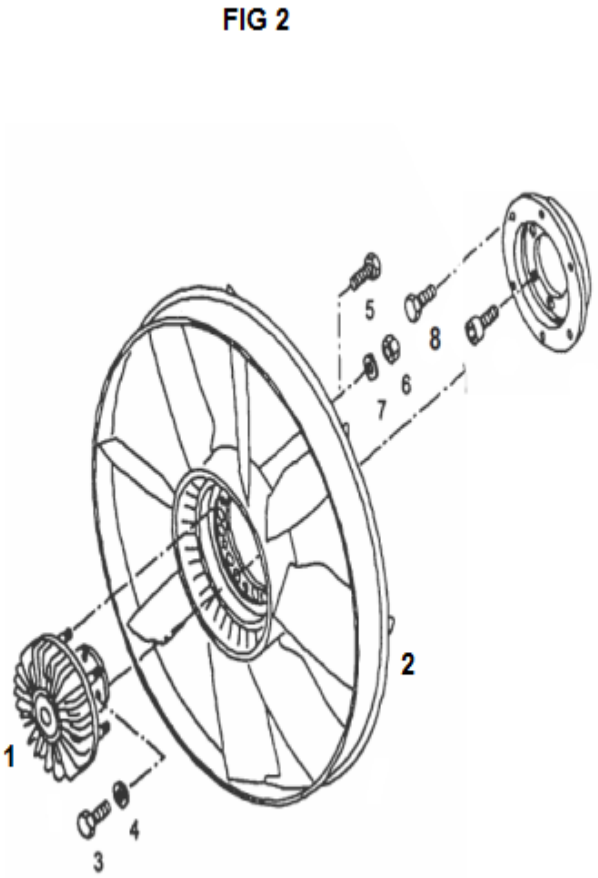

RIGID FAN WITH VISCO COUPLING AND MOUNTING PARTS Diagram No. 52

SR	PART NO.	DESCRIPTION	QTY	APPLICABLE MODEL	REMARKS
1	64.06630-0001	VISCOUS FAN CLUTCH	1	COMMON FOR ALL ENGINE EXCEPT 4 VCR ENGINES	REFER FIG. 1 & 2
1	51.06630-0082	VISCOUS FAN CLUTCH	1	COMMON FOR 4 VCR BS IV ENGINES ONLY	REFER FIG. 1 & 2
2	64.06601-0302	VISCOUS FAN DMR 654	1	COMMON FOR ALL ENGINE EXCEPT 4 VCR ENGINES	REFER FIG.1 & 2
2	51.06601-0279	VISCOUS FAN	1	COMMON FOR 4 VCR BS IV ENGINES ONLY	REFER FIG. 1 & 2
3	64.90020-0093	HHS M8 X20 DIN 933-8.8 BTS:170102.20	4	COMMON FOR ALL MODELS	REFER FIG. 2
3	64.90501-0037	HEX NUT M8X1.25 DIN934-8 A3C	6	COMMON FOR MODELS WITH 2 & 4 VCR ENGINES ONLY	REFER FIG. 1
3	64.90710-0026	PLAIN WASHER A8.4 DIN125-ST A3C	6	COMMON FOR MODELS WITH 2 & 4 VCR ENGINES ONLY	REFER FIG. 1
4	64.90710-0026	PL WASHER A8.4 DIN125-ST BTS170202.12	4	COMMON FOR ALL MODELS	REFER FIG. 2
4	64.06611-0001	COUPLING FLANGE FOR FAN (FAN SPACER)	1	COMMON FOR ALL MODELS	REFER FIG. 1
5	64.90501-0037	HEX NUT M8X1.25 DIN 934-8 BTS170202.22	6	COMMON FOR ALL MODELS	REFER FIG. 2
6	64.90710-0026	PL WASHER A8.4 DIN125-ST BTS170202.12	6	COMMON FOR ALL MODELS	REFER FIG. 2
6	64.90020-0093	HHS M8 X20 DIN 933-8.8 BTS:170102.20	4	COMMON FOR ALL MODELS	REFER FIG. 1
8	64.90020-0093	HHS M8 X20 DIN 933-8.8 BTS:170102.20	6	COMMON FOR ALL MODELS	REFER FIG. 2

EXHAUST MANIFOLD 4 CYL ENGINE

Diagram No. 53

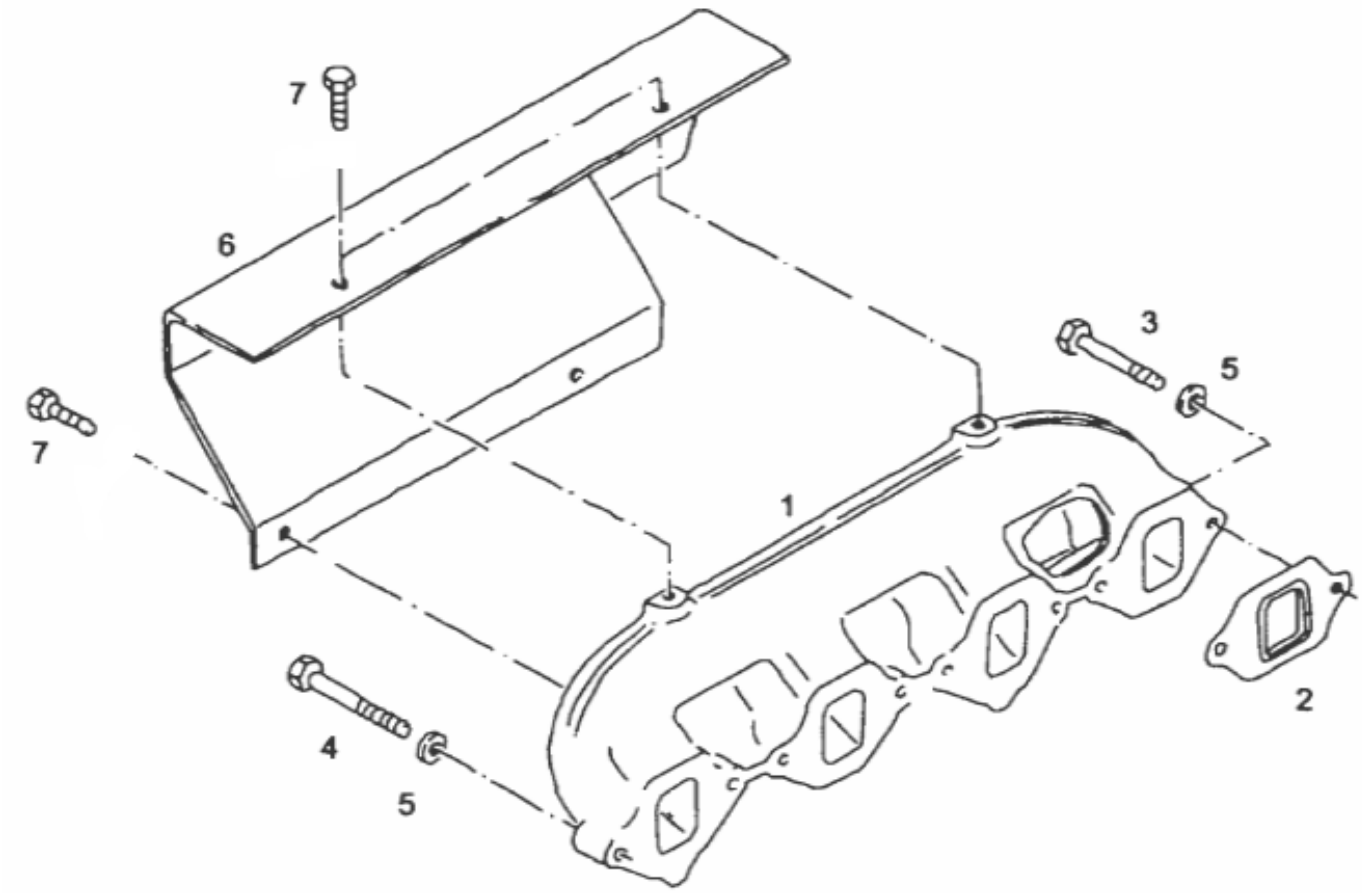

EXHAUST MANIFOLD 4 CYL ENGINE

Diagram No. 53

SR	PART NO.	DESCRIPTION	QTY	APPLICABLE MODEL	REMARKS
1	64.08102-0001	EXHAUST MANIFOLD	1	COMMON FOR MODELS WITH 180 HP ENGINES	
2	64.08901-0001	GASKET FOR EXHAUST MANIFOLD	4	COMMON FOR ALL MODELS	
3	51.90490-0029	HEX ROUND SCREW M10X48 WF	5	COMMON FOR ALL MODELS	
4	51.90490-0030	HEX ROUND SCREW M10X57WF	3	COMMON FOR ALL MODELS	
5	51.91701-0512	WASHER	2	COMMON FOR MODELS WITH 180 HP ENGINES	
6	51.15215-0032	HEAT SHIELD	1	COMMON FOR MODELS WITH 180 HP ENGINES	
7	64.90020-0232	SCREW M6X10-10.9-MAN183-A2C	2	COMMON FOR MODELS WITH 180 HP ENGINES	06.02815-8203 ALTERNATE

BRACKET FOR CONTROL **Diagram No. 54**

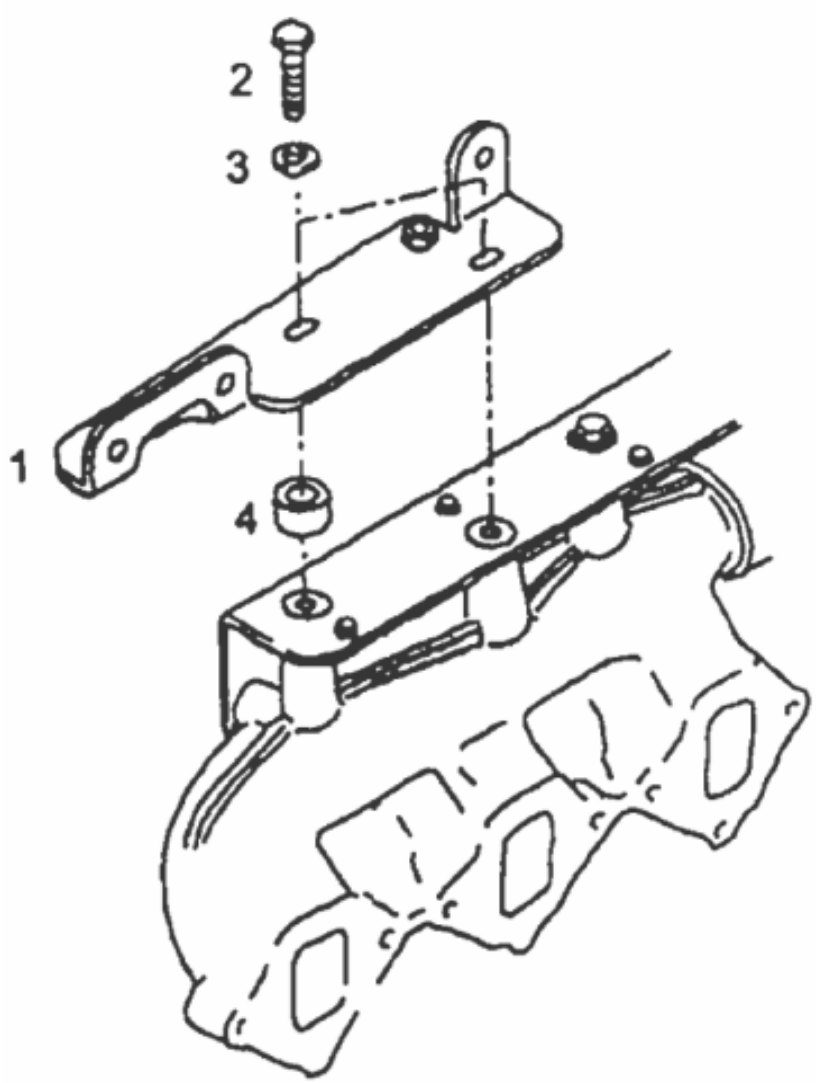

BRACKET FOR CONTROL

Diagram No. 54

SR	PART NO.	DESCRIPTION	QTY	APPLICABLE MODEL	REMARKS
1	64.32615-5001	BRACKET	1	COMMON FOR ALL ENGINES EXCEPT 180 HP, 2 & 4 VCR ENGINES.	
2	64.90020-0095	HHS 8X25 DIN 933-8.8	2	COMMON FOR ALL MODELS	
3	64.90710-0026	PL WASHER A8.4 DIN125-ST	2	COMMON FOR ALL MODELS	
4	64.91701-0004	BUSH	2	COMMON FOR ALL MODELS	

CHARGE – AIR PIPE WITH HOLDER

Diagram No. 55

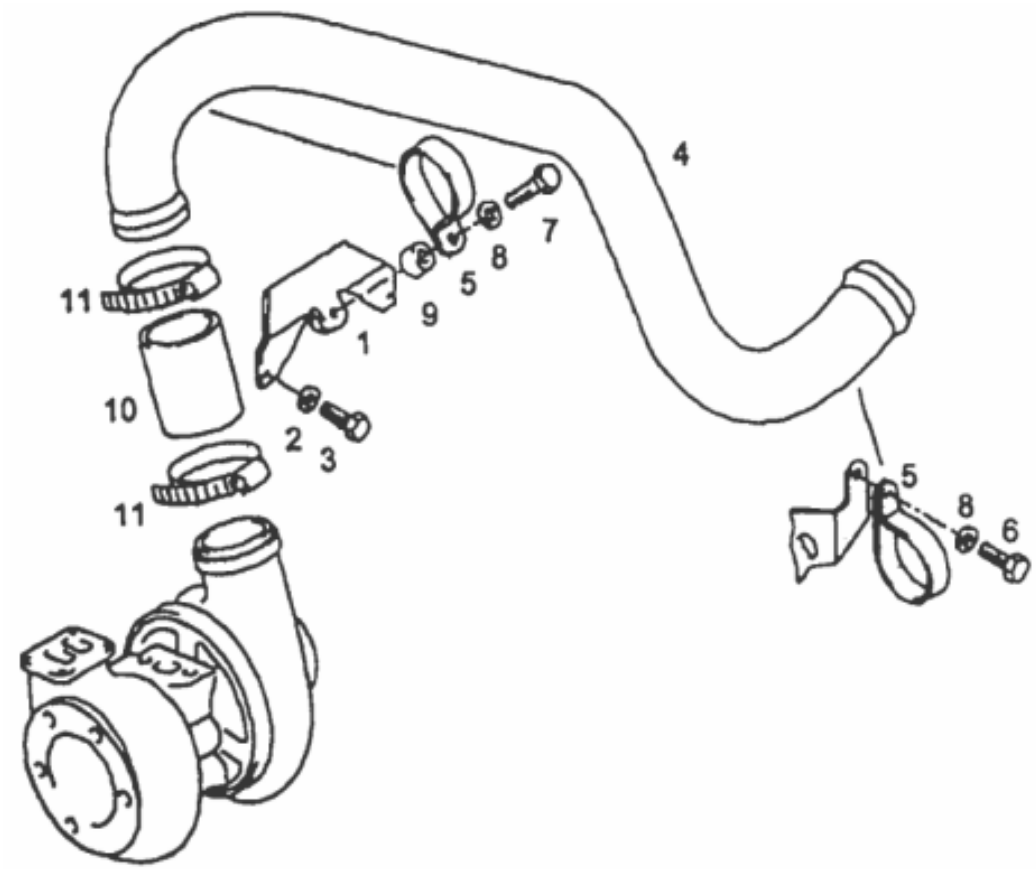

CHARGE – AIR PIPE WITH HOLDER

Diagram No. 55

SR	PART NO.	DESCRIPTION	QTY	APPLICABLE MODEL	REMARKS
1	64.09440-5001	BRACKET	1	COMMON FOR ALL MODELS	
2	64.90020-0093	HHS M8 X20 DIN 933-8.8	2	COMMON FOR ALL MODELS	
3	64.90710-0026	PL WASHER A8.4 DIN125-ST	2	COMMON FOR ALL MODELS	
4	64.09411-0001	CHARGE AIR PIPE TC TO INTERCOOLER	1	COMMON FOR MODELS WITH 280 HP ENGINES (VP 44 & 2VCR),220 HP BSIII ENGINES WITH VP 44 FIP & 220 HP BS II ENGINES	
5	64.97445-0019	HOLDING CLAMP D1-50X25-W1-2-EPDM	2	COMMON FOR ALL MODELS	
6	64.90020-0093	HHS M8 X20 DIN 933-8.8	1	COMMON FOR ALL MODELS	
7	64.90020-0093	HHS M8 X20 DIN 933-8.8	1	COMMON FOR ALL MODELS	
8	64.90710-0026	PL WASHER A8.4 DIN125-ST	2	COMMON FOR ALL MODELS	
-	64.91606-0012	CLOSING CAP FOR INTAKE PIPE	1	COMMON FOR ALL MODELS EXCEPT MODELS WITH 180 HP ENGINES	
9	64.91701-0003	BUSH9X16X9.5	1	COMMON FOR ALL MODELS EXCEPT MODELS WITH 180 HP ENGINES	
10	51.96330-0359	HOSE FOR CHARGE AIR PIPE 70MM	1	COMMON FOR MODELS WITH 280 HP ENGINES (VP 44 & 2VCR) , 220 HP BSIII ENGINES WITH VP 44 FIP & 220 HP BS II ENGINES WITH VE 6 FIP	64.96330-0028 ALTERNATE
11	64.97122-0013	HOSE CLAMP AS56-63N (SS)	2	COMMON FOR ALL MODELS	

OIL LINES FOR TURBO CHARGER (4 CYL. ENGINE)

Diagram No. 56

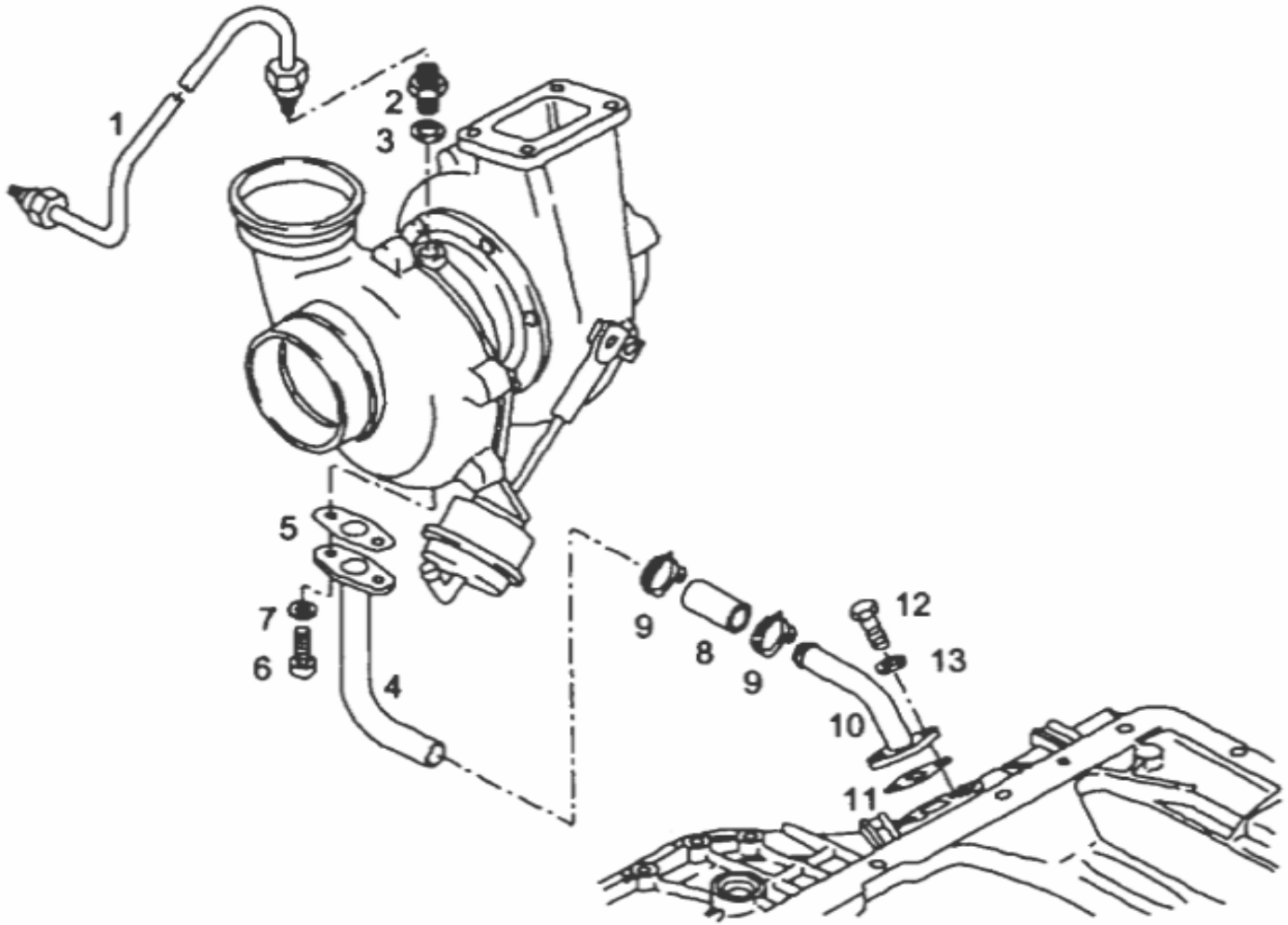

OIL LINES FOR TURBO CHARGER (4 CYL. ENGINE) Diagram No. 56

SR	PART NO.	DESCRIPTION	QTY	APPLICABLE MODEL	REMARKS
1	51.05703-5159	ASSY OIL INLET PIPE FOR TC (4CYL E-III)	1	COMMON FOR MODELS WITH 180 HP ENGINES ONLY	
2	64.98130-0007	THREADED SOCKET	1	COMMON FOR MODELS WITH 180 HP ENGINES ONLY	
3	06.56631-0106	SEALING WASHER BS-14,7X22,0-ST FPM1-80	1	COMMON FOR ALL MODELS	
4	64.05703-5005	ASSY TC OIL DRAIN PIPE (UPPER) 4CYL EIII	1	COMMON FOR MODELS WITH 180 HP ENGINES ONLY	
5	64.96601-0029	GASKET	1	COMMON FOR MODELS WITH 180 HP ENGINES ONLY	
6	64.90030-0024	SOCKET HD BOLT M6X20 DIN 912-12.9 PHR	2	COMMON FOR MODELS WITH 180 HP ENGINES ONLY	
7	64.90710-0025	PL WASHER A6.4 DIN125-ST BTS170202.12	2	COMMON FOR ALL MODELS	
8	51.96330-0348	HOSE FOR TURBO OIL DRAIN PIPE (4-CYL)	1	COMMON FOR MODELS WITH 180 HP ENGINES ONLY	
9	64.97640-0003	SPRING BAND CLAMP 23X12	2	COMMON FOR MODELS WITH 180 HP ENGINES ONLY	
10	64.05703-5006	ASSY TC OIL DRAIN PIPE (LOWER) 4CYL EIII	1	COMMON FOR ALL MODELS	
11	64.96601-0001	GASKET (TURBO DRAIN PIPE)	1	COMMON FOR ALL MODELS	
12	64.90020-0093	HHS M8 X20 DIN 933-8.8 BTS:170102.20	2	COMMON FOR ALL MODELS	
13	64.90710-0026	PL WASHER A8.4 DIN125-ST BTS170202.12	2	COMMON FOR ALL MODELS	

EXHAUST MANIFOLD 6 CYL. ENGINE

Diagram No. 57

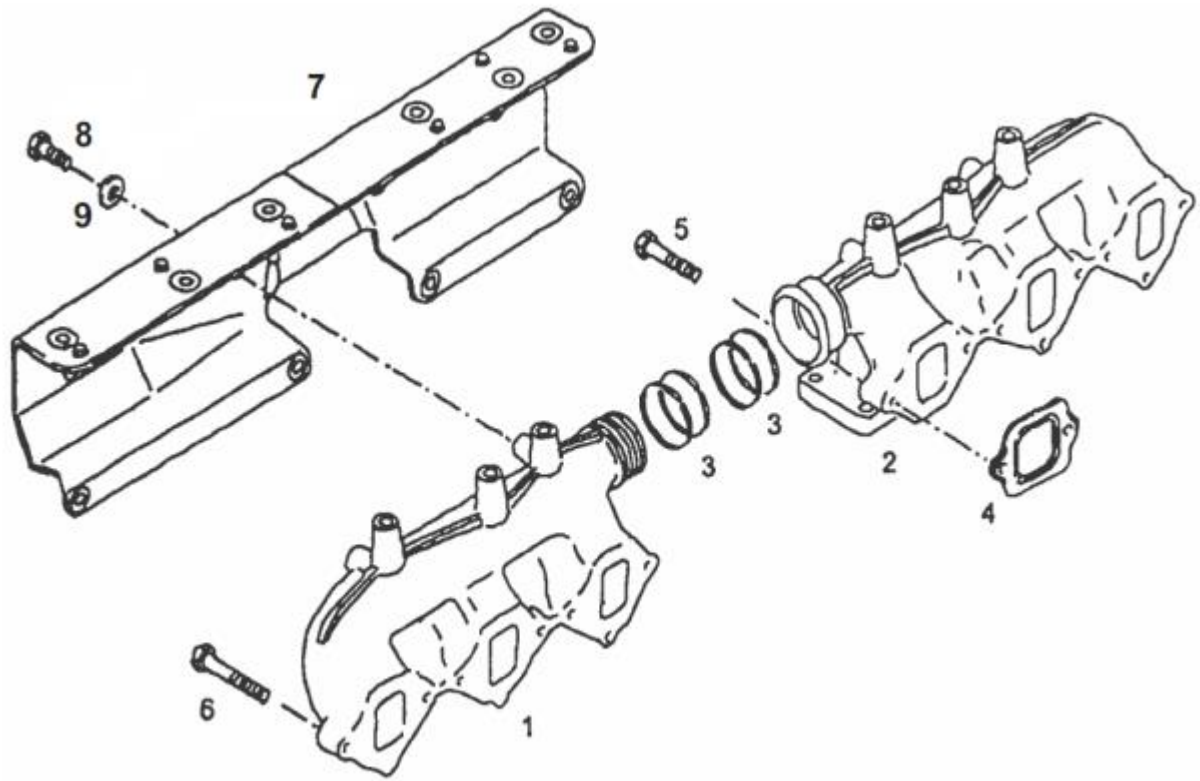

EXHAUST MANIFOLD 6 CYL. ENGINE

Diagram No. 57

SR	PART NO.	DESCRIPTION	QTY	APPLICABLE MODEL	REMARKS
1	64.08101-0001	EXHAUST MANIFOLD (1,2,3)	1	COMMON FOR ALL ENGINES EXCEPT 180 HP & 4 VCR ENGINES.	
2	51.08102-0203	EXHAUST MANIFOLD (4,5,6)	1	COMMON FOR ALL ENGINES EXCEPT 180 HP & 4 VCR ENGINES.	
3	51.98701-0085	MULTI DISC RING (FOR EXHAUST MANIFOLD)	4	COMMON FOR ALL ENGINES EXCEPT 180 HP & 4 VCR ENGINES.	
4	51.08901-0027	GASKET FOR EXHAUST MANIFOLD	6	COMMON FOR ALL MODELS	SUPERSEDED BY 64.08901-0001
5	51.90490-0029	HEX ROUND SCREW M10X48 WF	11	COMMON FOR ALL MODELS	64.90490-0008 ALTERNATE
6	51.90490-0030	HEX ROUND SCREW M10X57WF	1	COMMON FOR ALL MODELS	64.90490-0025 ALTERNATE
7	64.08120-0001	HEAT SHIELD	1	COMMON FOR ALL ENGINES EXCEPT 180 HP & 4 VCR ENGINES.	
8	64.90020-0175	HEX SCREW M8X16-8.8 C3J DIN 933	10	COMMON FOR ALL ENGINES EXCEPT 180 HP & 4 VCR ENGINES.	
9	64.90710-0002	WASHER D9/19/3	10	COMMON FOR ALL ENGINES EXCEPT 180 HP & 4 VCR ENGINES.	

AIR INTAKE PIPE & MOUNTING

Diagram No. 58

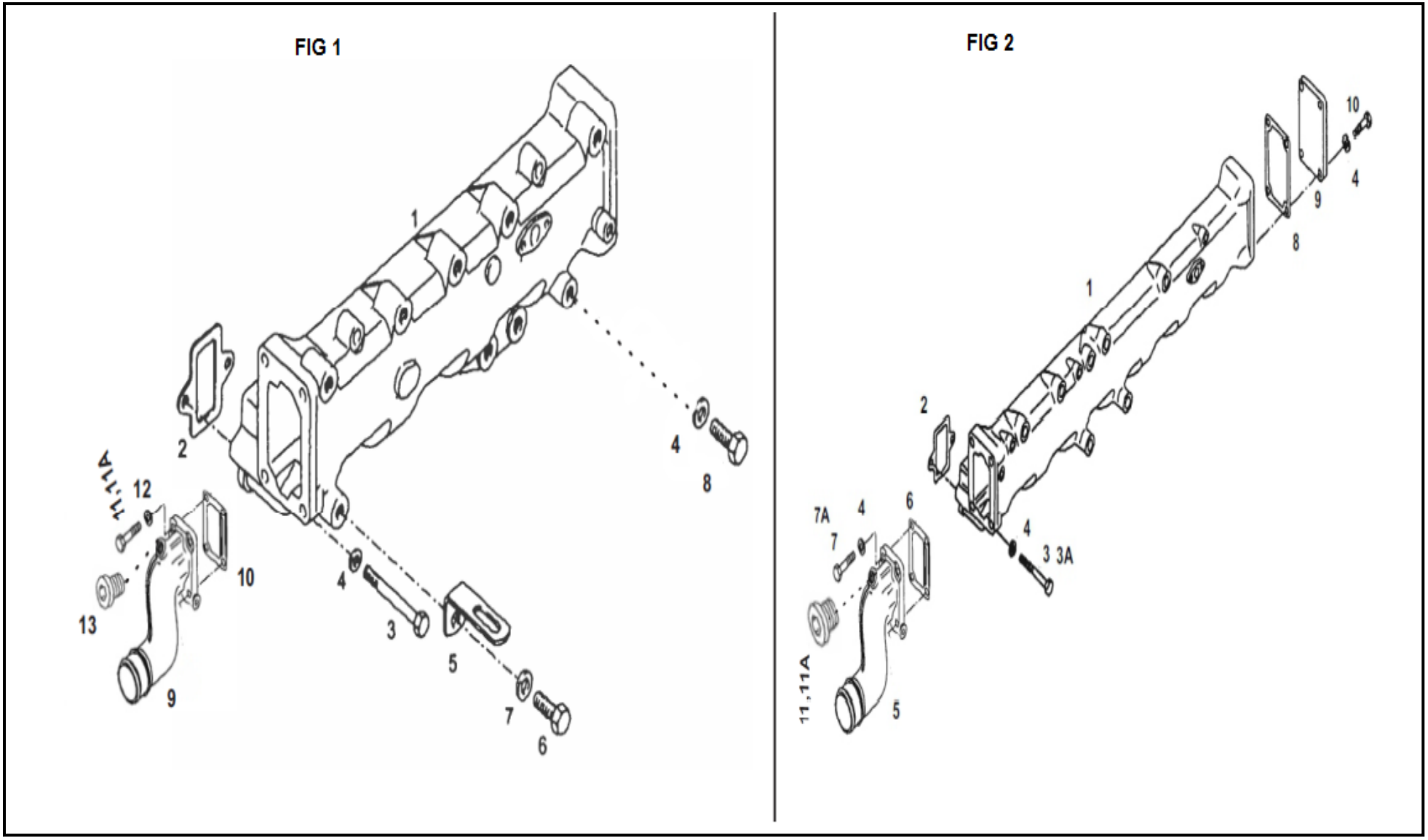

AIR INTAKE PIPE & MOUNTING

Diagram No. 58

SR	PART NO.	DESCRIPTION	QTY	APPLICABLE MODEL	REMARKS
1	51.08201-0409	AIR INTAKE MANIFOLD 6 CYL –M/C	1	COMMON FOR MODELS WITH 280 & 220 HP ENGINES WITH VP 44 FIP & MODELS WITH 220 HP BS III ENGINES WITH VE6 FIP & BS II MODELS	REFER FIG. 2 SUPERCEDED BY 64.08201-0409
1	64.08201-0006	AIR INTAKE MANIFOLD M/C	1	COMMON FOR MODELS WITH 180 HP ENGINES	REFER FIG. 1
2	64.08902-0001	GASKET – INTAKE MANIFOLD	6	COMMON FOR ALL MODELS	REFER FIG. 1 & 2
3	64.90020-0242	HHB M8X70 DIN 931-8.8 BTS:170102-20	9	COMMON FOR ALL MODEL	REFER FIG. 1 & 2
3A	64.90020-0222	HHB M8X75 DIN 931-8.8 BTS:170102-20	3	COMMON FOR ALL MODELS EXCEPT MODELS WITH 2VCR ENGINES	REFER FIG. 2
4	64.90710-0026	PL WASHER A8.4 DIN125-ST BTS170202.12	19	COMMON FOR ALL MODELS	REFER FIG. 1 & 2
5	64.25441-0011	ANGLE BRACKET FOR CABLE HARNESS SUPPORT	1	COMMON FOR MODELS WITH 180 HP ENGINES ONLY	REFER FIG. 1
5	51.09411-0640	CHARGE AIR PIPE TO INTAKE MANIFOLD-M/C	1	COMMON FOR ALL MODELS EXCEPT MODELS WITH 180 HP ENGINES	REFER FIG. 2
6	64.90020-0246	HEX BOLT M10X20-8	1	COMMON FOR MODELS WITH 180 HP ENGINES ONLY	REFER FIG. 1
6	64.08902-0002	GASKET FOR INTAKE PIPE	1	COMMON FOR ALL MODELS	REFER FIG. 2
7	64.90710-0027	WASHER	1	COMMON FOR ALL MODELS	REFER FIG. 1
7	64.90020-0097	HHS M8X30 DIN 933-8.8 BTS:170102.20	2	COMMON FOR ALL MODELS	REFER FIG. 2
7A	64.90020-0100	HHS M8 X 40 DIN 933 – 8.8 BTS 170102.20	1	COMMON FOR ALL MODELS	REFER FIG. 2
8	64.90020-0242	HEX HEAD BOLT M8X70 DIN931-8.8 PHR	8	COMMON FOR ALL MODELS	REFER FIG.1
8	64.08902-0002	GASKET FOR INTAKE PIPE	1	COMMON FOR ALL MODELS	REFER FIG. 2
9	51.09411-0770	CHARGE AIR PIPE (S TYPE/ON MANIFOLD)-M/C	1	COMMON FOR MODELS WITH 180 HP ENGINES ONLY	REFER FIG. 1.

9	64.08203-0001	COVER FOR INTAKE PIPE	1	COMMON FOR ALL MODELS EXCEPT MODELS WITH 180 HP ENGINES	REFER FIG. 2
10	64.08902-0002	GASKET FOR INTAKE PIPE	1	COMMON FOR ALL MODELS	REFER FIG. 1
10	64.90020-0095	HHS 8X25 DIN 933-8.8 BTS:170102.20	4	COMMON FOR ALL MODELS EXCEPT MODELS WITH 180 HP ENGINES	REFER FIG. 2
11	64.90310-0007	LOCKING BOLT M24X1.5-ST-ZNPHR3F DIN 906	1	COMMON FOR ALL MODELS	REFER FIG. 2
11A	06.56631-0121	SEALING RING BS20.7X28-ST-FPM1-80	1	COMMON FOR ALL MODELS	REFER FIG. 2
11	64.90020-0099	HEX HEAD SCREW M8X35 DIN933-8.8 PHR	3	COMMON FOR ALL MODELS EXCEPT MODELS WITH 280 HP 2VCR ENGINES	REFER FIG. 1
11A	64.90020-0100	HEX HEAD SCREW M8X40 DIN933-8.8 PHR	1	COMMON FOR ALL MODELS	REFER FIG. 1
12	64.90710-0026	PLAIN WASHER A8.4 DIN125-ST A3C	4	COMMON FOR ALL MODELS	REFER FIG. 1
13	64.90310-0007	LOCKING BOLT M24X1.5-ST-ZNPHR3F DIN 906	1	COMMON FOR ALL MODELS	REFER FIG. 1

COMMON RAIL INJECTION SYSTEM (2 VCR)

Diagram No. 59

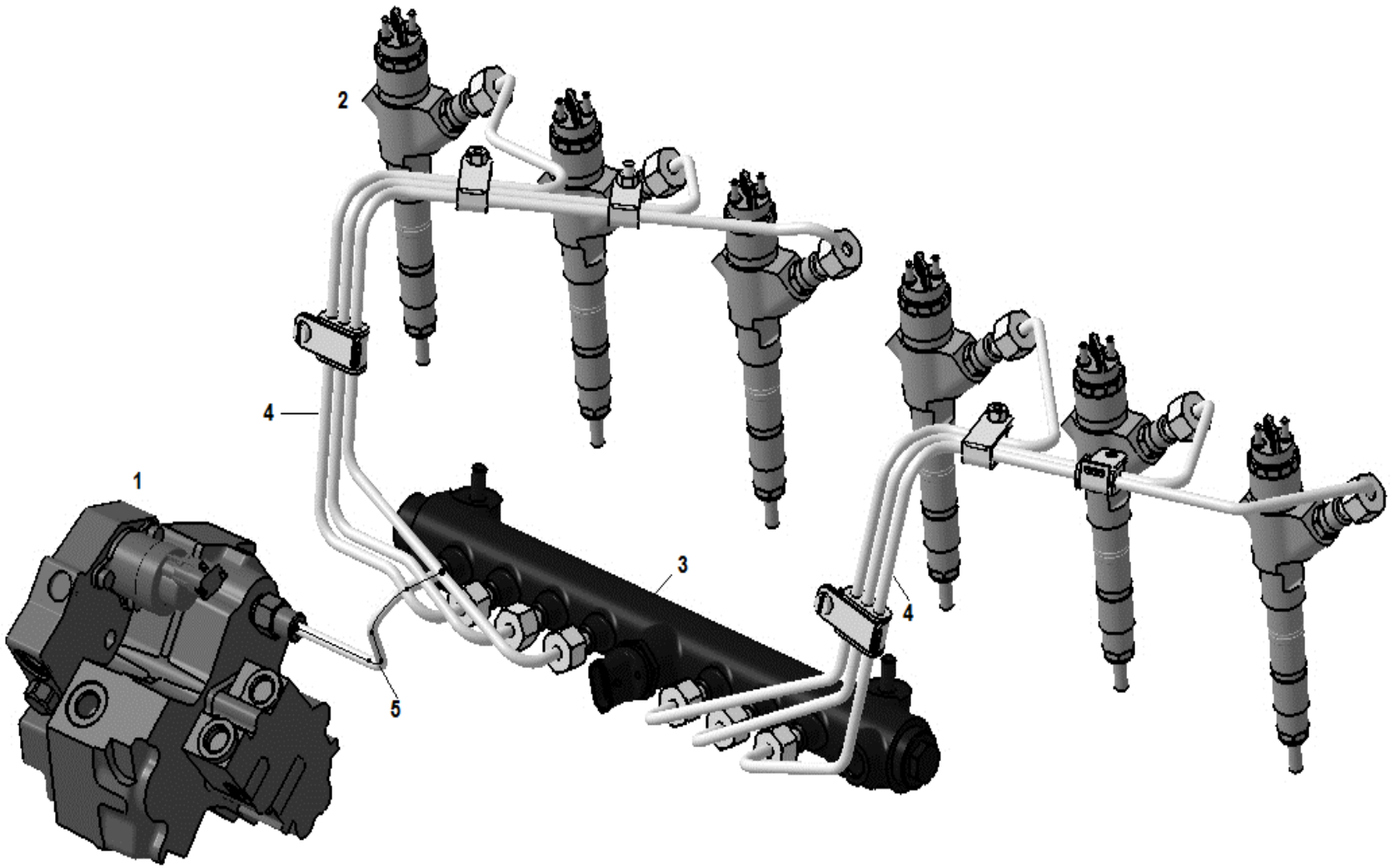

COMMON RAIL INJECTION SYSTEM (2 VCR) Diagram No. 59

SR	PART NO.	DESCRIPTION	QTY	APPLICABLE MODEL	REMARKS
1	64.11103-7004	PRESSURE PUMP CP 3.3	1	FOR 2 VCR ENGINES ONLY	
2	64.10100-7004	INJECTOR CRIN	6	FOR 2 VCR ENGINES ONLY	
3	64.10311-6002	COMMON RAIL – 6 CYL – 4V	1	FOR 2 VCR ENGINES ONLY	SUPERCEDED BY 51.10311-6063
4	64.10303-7024	HIGH PRESSURE PIPE SET CYL – 1-6 (2VCR)	1	FOR 2 VCR ENGINES ONLY	
5	64.10303-7023	HPP FOR DO836LFL13 (PRESS PUMP TO RAIL)	1	FOR 2 VCR ENGINES ONLY	

CHARGE AIR PIPE TO TURBOCHARGER (4 CYL ENGINE)

Diagram No. 60

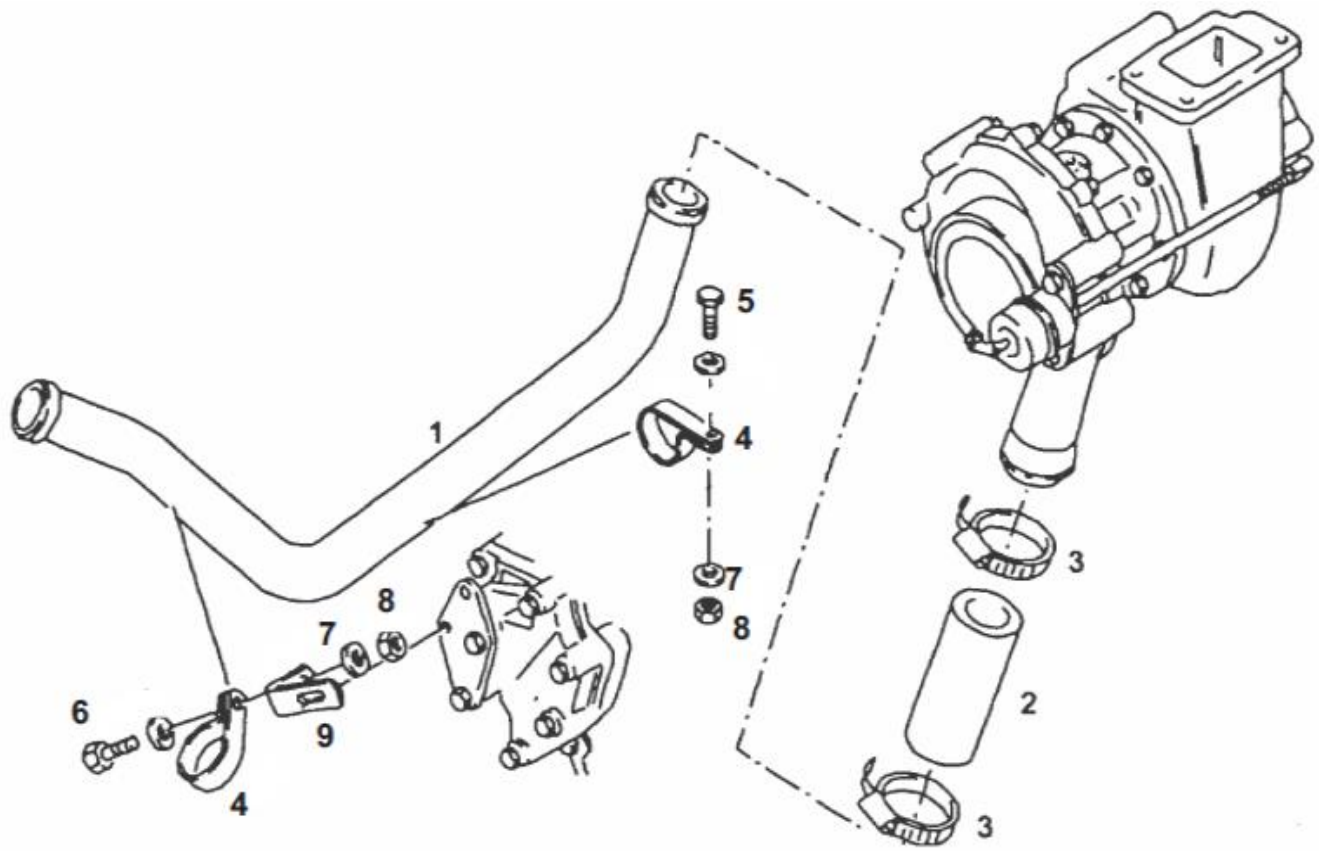

CHARGE AIR PIPE TO TURBOCHARGER (4 CYL ENGINE) Diagram No. 60

SR	PART NO.	DESCRIPTION	QTY	APPLICABLE MODEL	REMARKS
1	64.09411-0002	CHARGE AIR PIPE (TC TO INTER COOLER)	1	COMMON FOR MODELS WITH 180 HP ENGINES ONLY	
2	51.96301-0107	HOSE M3055-50-7LX90	1	COMMON FOR MODELS WITH 220 HP BSIII ENGINES WITH VE6 FIP & MODELS WITH 180 HP ENGINES	
3	64.97122-0013	HOSE CLAMP AS56-63N (SS)	2	COMMON FOR ALL MODELS	
4	64.97445-0019	HOLDING CLAMP D1-50X25-W1-2-EPDM DIN3016	2	COMMON FOR ALL MODELS	
5	64.90020-0156	HEX BOLT M8X28	1	COMMON FOR MODELS WITH 180 HP ENGINES ONLY	
6	64.90020-0149	HEX SCREW M8X28-8.8-MAN183-PHR DIN 933	1	COMMON FOR MODELS WITH 180 HP ENGINES ONLY	
7	64.90710-0026	PL WASHER A8.4 DIN125-ST BTS170202.12	3	COMMON FOR ALL MODELS	
8	64.90501-0037	HEXAGON NUT	2	COMMON FOR ALL MODELS	
9	64.97480-0001	HOLDING ANGLE	1	COMMON FOR ALL MODELS	

INJECTOR **Diagram No. 61**

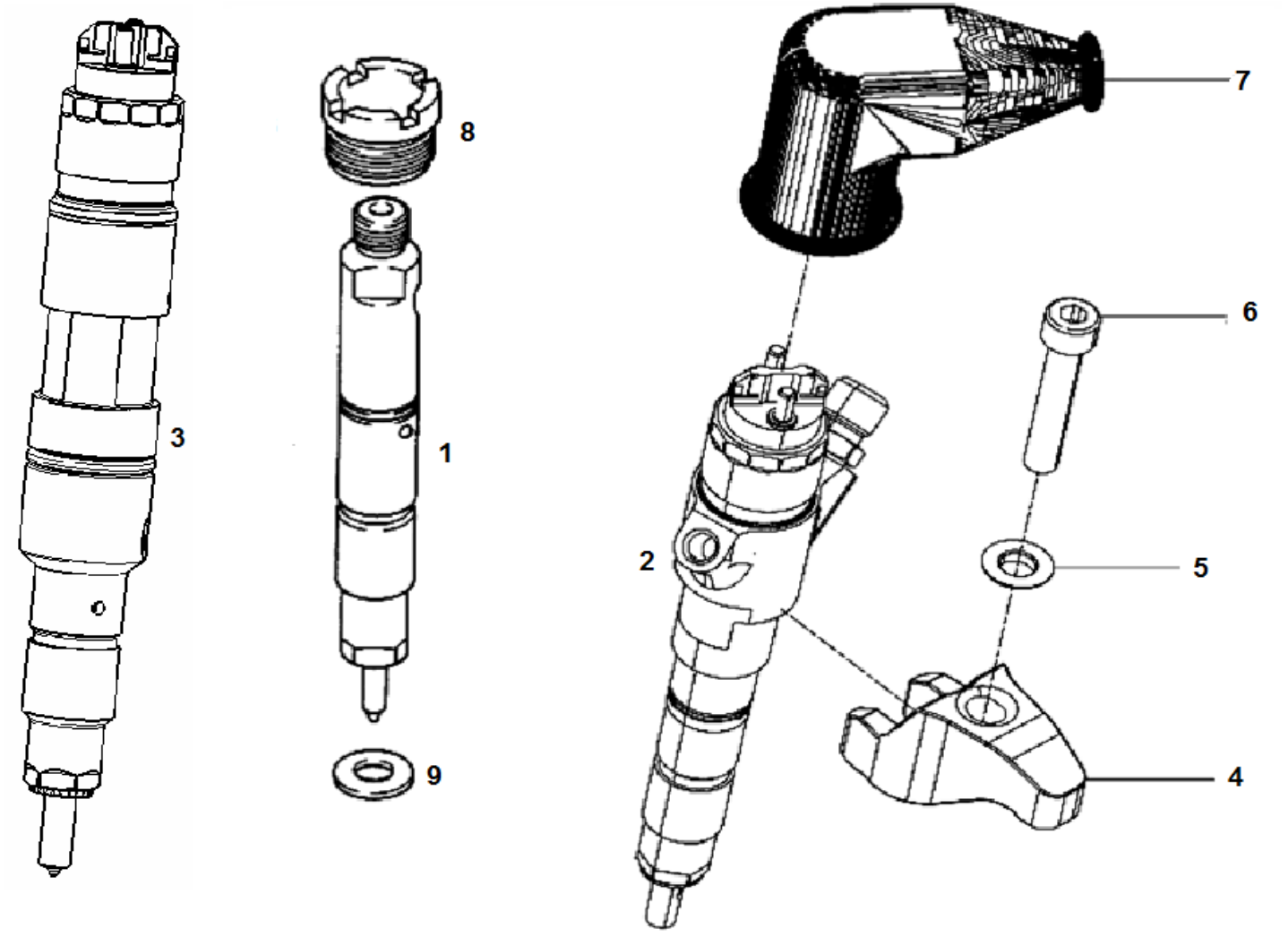

INJECTOR

Diagram No. 61

SR	PART NO.	DESCRIPTION	QTY	APPLICABLE MODEL	REMARKS
1	64.10100-7006	INJECTOR	6	FOR 280 HP ENGINE WITH VP 44 FIP & 220 HP BS II ENGINES ONLY	
1	64.10100-7007	INJECTOR	6	FOR 180 HP ENGINES & 220 HP BS III ENGINES WITH VP 44 FIP ONLY	ONLY QTY DIFFERS FOR 4 CYLINDER & 6 CYLINDER ENGINES
1	64.10100-7005	INJECTOR	6	FOR 220 HP BS III ENGINES WITH VE6 FIP	FOR VEHICLES BEFORE VIN : MBKMC5BT8EN013235
1	64.10100-7009	INJECTOR	6	FOR 220 HP BS III ENGINES WITH VE6 FIP	FOR VEHICLES FROM VIN : MBKMC5BT8EN013235
2	64.10100-7004	INJECTOR CRIN	6	FOR 2 VCR ENGINES ONLY	
3	51.10100-6115	INJECTOR	6	FOR 4 VCR ENGINES ONLY	
4	64.97445-0058	INJECTOR HOLDING CLAMP	6	FOR 2 VCR ENGINES ONLY	
4	51.10104-0056	INJECTOR HOLDING CLAMP	6	FOR 4 VCR ENGINES ONLY	
5	64.91710-0064	WASHER DIN 6319-C 8.4	6	FOR 2 & 4 VCR ENGINES ONLY	
6	64.90030-0065	SCREW M8X50 DIN912-12.	6	FOR 2 VCR ENGINES ONLY	
6	06.02191-0413	HEX BOLT DIN912-M8X45	6	FOR 4 VCR ENGINES ONLY	
7	64.10100-0001	INJECTOR RUBBER CAP	6	FOR 2 VCR ENGINES ONLY	
8	64.10108-0001	LOCKING BOLT	6	FOR ALL ENGINES EXCEPT 2 & 4 VCR ENGINES	ONLY QTY DIFFERS FOR 4 CYLINDER & 6 CYLINDER ENGINES
9	51.98701-0091	SEALING RING	6	FOR ALL ENGINES EXCEPT 2 & 4 VCR ENGINES	ONLY QTY DIFFERS FOR 4 CYLINDER & 6 CYLINDER ENGINES

AIR INTAKE ON TURBOCHARGER

Diagram No. 62

FIG 1

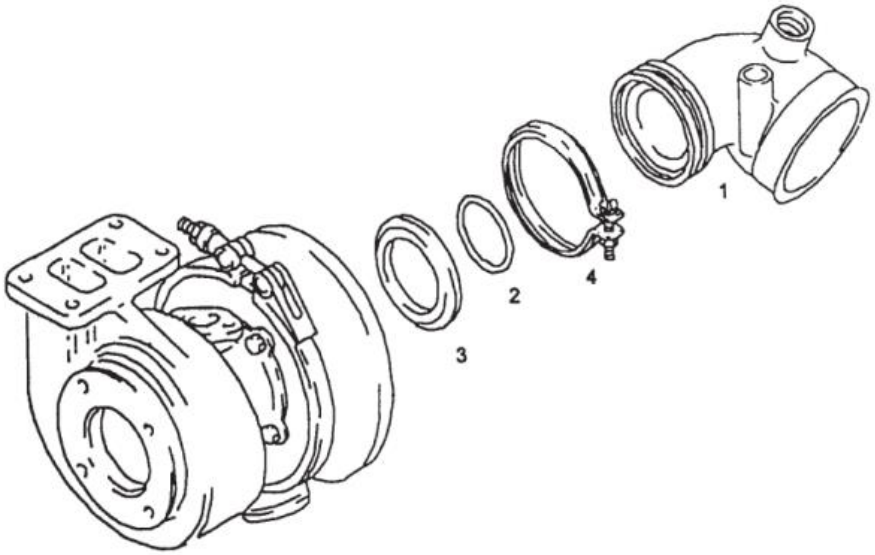

FIG 2

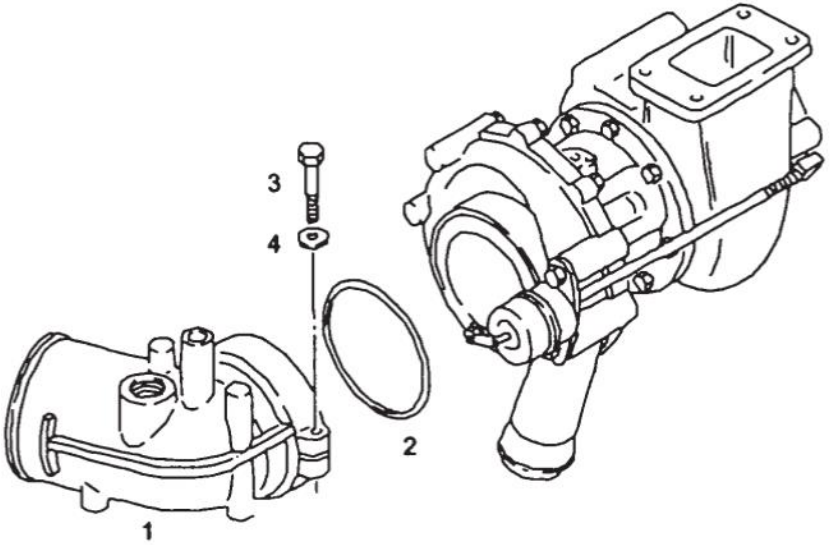

AIR INTAKE ON TURBOCHARGER

Diagram No. 62

SR	PART NO.	DESCRIPTION	QTY	APPLICABLE MODEL	REMARKS
1	64.09402-0001	TC INTAKE ELBOW M/C	1	COMMON FOR ALL ENGINES EXCEPT 180 HP & 4 VCR ENGINES	REFER FIG. 1
1	64.09402-0114	AIR INTAKE ELBOW	1	COMMON FOR 180 HP ENGINES ONLY	REFER FIG. 2
2	64.96501-0039	O RING 100X4 B-NBR 3-70 M7.660.60	1	COMMON FOR ALL ENGINES EXCEPT 180 HP & 4 VCR ENGINES	REFER FIG. 1
2	64.96501-0090	O RING 69.5X3 NBR-3-70 MAN356	1	COMMON FOR 180 HP ENGINES ONLY	REFER FIG. 2
3	64.08240-0001	CLAMPING RING	1	COMMON FOR ALL ENGINES EXCEPT 180 HP & 4 VCR ENGINES	REFER FIG. 1
3	64.90020-0173	HEX SCREW M8X50-10.9 MAN183 PHR DIN 933	2	COMMON FOR 180 HP ENGINES ONLY	REFER FIG. 2
4	51.97445-0051	ASSY CLAMP	1	COMMON FOR ALL ENGINES EXCEPT 180 HP & 4 VCR ENGINES	REFER FIG. 1
4	64.90710-0077	WASHER 8.4 DIN125-200HV MAN183-B1	1	COMMON FOR 180 HP ENGINES ONLY	REFER FIG. 2

OIL SUPPLY PIPE **Diagram No. 63**

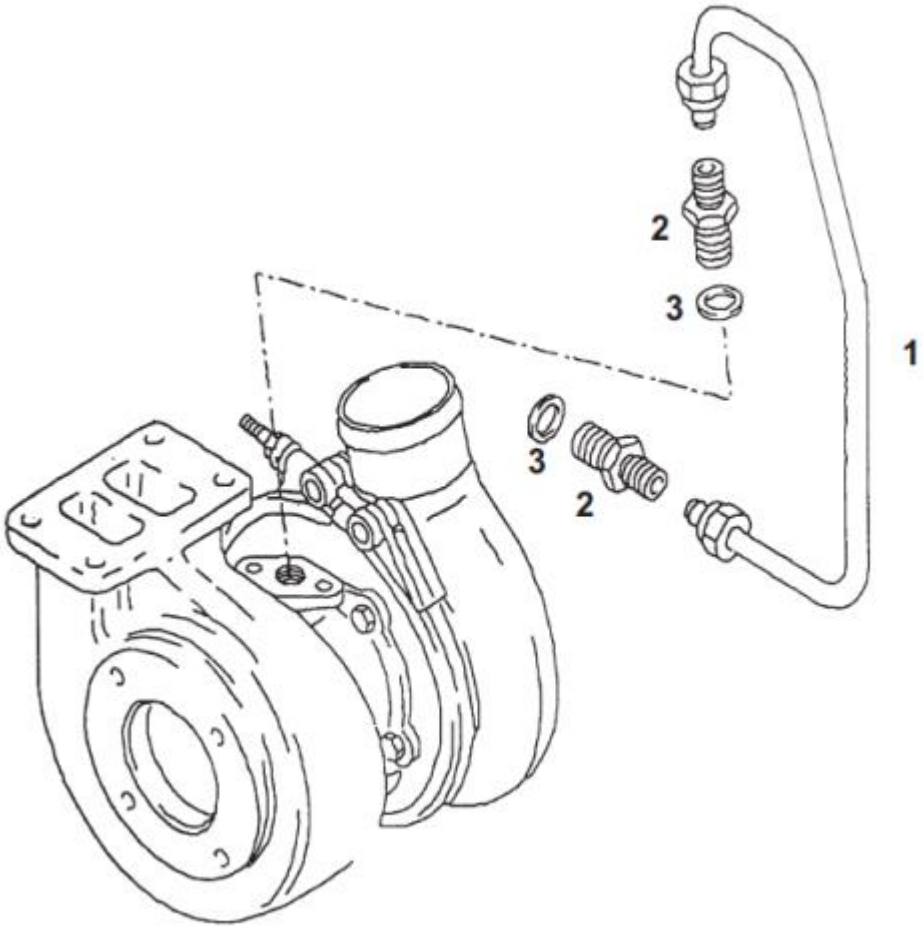

OIL SUPPLY PIPE

Diagram No. 63

SR	PART NO.	DESCRIPTION	QTY	APPLICABLE MODEL	REMARKS
1	64.05703-5001	OIL SUPPLY PIPE	1	FOR ALL ENGINES EXCEPT 180 HP & 4 VCR ENGINES	
2	64.98110-0023	SCREW FITTING TURBO	2	FOR ALL ENGINES EXCEPT 180 HP & 4 VCR ENGINES	
3	06.56631-0106	SEALING RING BS-14,7X22,O-ST	2	COMMON FOR ALL MODELS	64.96501-0047 ALTERNATE

OIL RETURN PIPE FROM TURBOCHARGER

Diagram No. 64

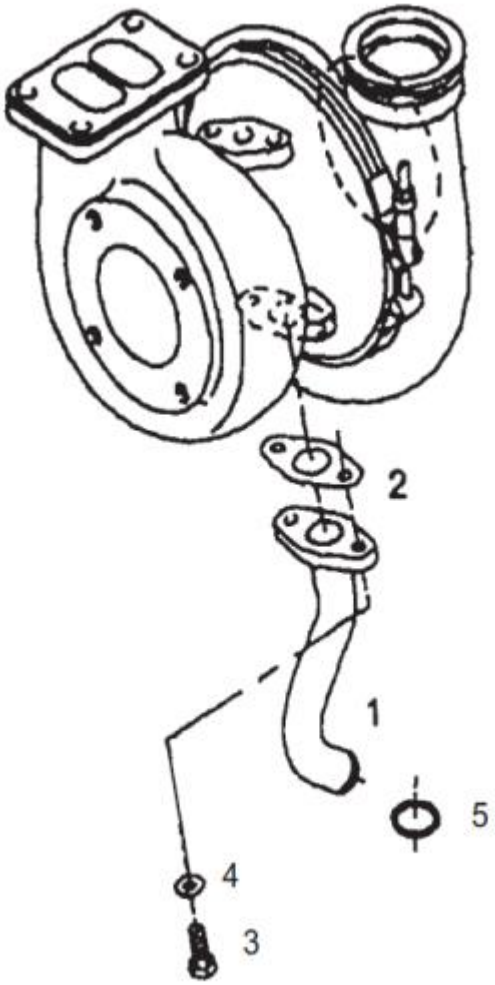

OIL RETURN PIPE FROM TURBOCHARGER

Diagram No. 64

SR	PART NO.	DESCRIPTION	QTY	APPLICABLE MODEL	REMARKS
1	64.05702-0001	OIL RETURN PIPE SOLDERED	1	FOR ALL ENGINES EXCEPT 180 HP & 4 VCR ENGINES	
2	64.96601-0001	GASKET	1	FOR ALL ENGINES EXCEPT 180 HP & 4 VCR ENGINES	
3	64.90030-0008	HEX BOLT M8 X 20	2	FOR ALL ENGINES EXCEPT 180 HP & 4 VCR ENGINES	
4	64.90710-0026	WASHER A8.4 X 16 X 1.6	2	FOR ALL ENGINES EXCEPT 180 HP & 4 VCR ENGINES	
5	64.96501-0033	O RING 23X3 B-FPM 1-70 M7.660.60	1	FOR ALL ENGINES EXCEPT 180 HP & 4 VCR ENGINES	

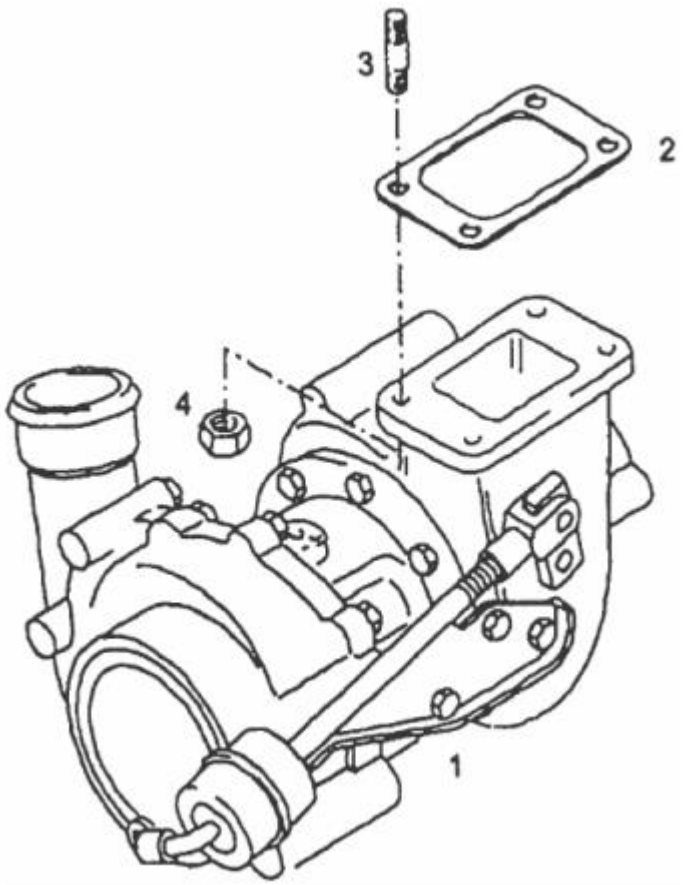
3
2
4
1

TURBOCHARGER

Diagram No. 65

SR	PART NO.	DESCRIPTION	QTY	APPLICABLE MODEL	REMARKS
1	64.09100-7003	TURBO CHARGER	1	FOR 280 HP ENGINES (VP 44 & 2VCR),220 HP BS III ENGINES WITH VP 44 FIP & 220 HP BS II ENGINES	
1	51.09100-7517	EXHAUST TURBO CHARGER	1	FOR MODELS WITH 180 HP ENGINE S ONLY	
1	64.09100-7004	TURBOCHARGER W/O WASTE GATE (CTT)	1	FOR 220 HP BS III ENGINES WITH VE 6 FIP & 230 HP 2 VCR ENGINES ONLY	
1	51.09100-7575	TURBOCHARGER	1	FOR 4 VCR BS IV ENGINES ONLY	
2	64.09901-0001	GASKET – TURBO CHARGER	1	FOR ALL ENGINES EXCEPT 180 HP ENGINES.	51.09901-0051 ALTERNATE
3	51.90210-0013	STUD M8 X 25	4	FOR MODELS WITH 180 HP ENGINE S ONLY	
3	51.90201-0251	STUD M10X25-SD	4	FOR ALL MODELS EXCEPT MODELS WITH 180 HP ENGINES	64.90201-0003 ALTERNATE
4	64.90501-0053	HEX LOCK NUT AM8.8	4	FOR MODELS WITH 180 HP ENGINE ONLY	
4	64.90501-0060	HEX NUT AM10-10-A3C M7.112.60	4	FOR ALL MODELS EXCEPT MODELS WITH 180 HP ENGINES	

INJECTION LINE **Diagram No. 66**

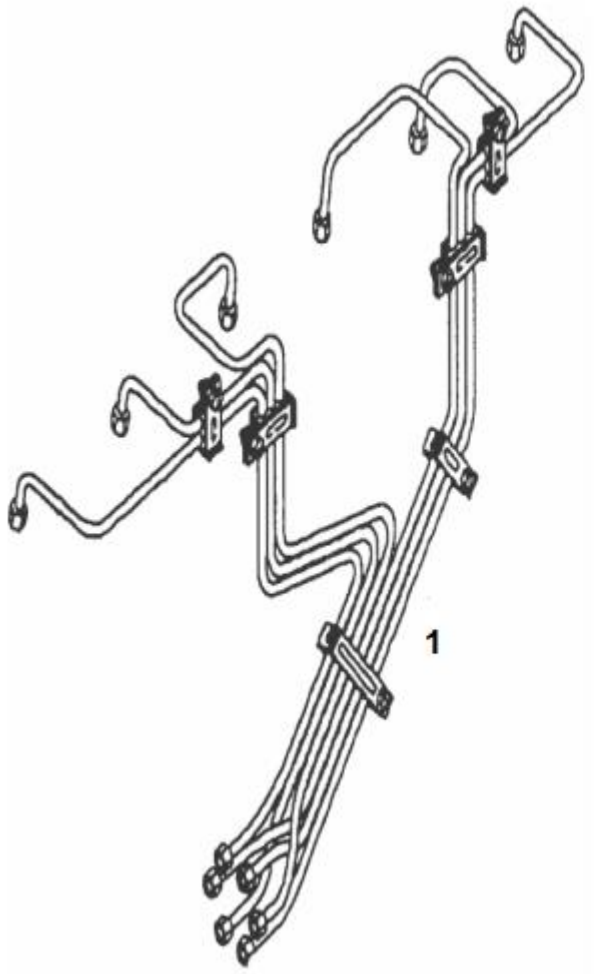

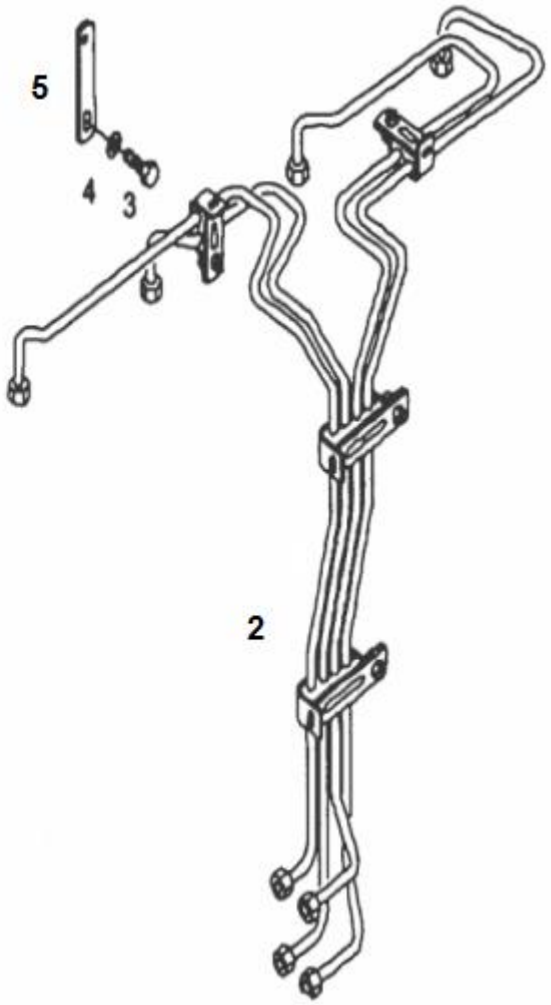

INJECTION LINE

Diagram No. 66

SR	PART NO.	DESCRIPTION	QTY	APPLICABLE MODEL	REMARKS
1	51.10303-6177	HIGH PRESSURE PIPES CYL. 1-6	1	FOR 280 HP & 220 HP BS III ENGINES WITH VP 44 FIP.	
1	64.10303-6003	HIGH PRESSURE PIPES CYL. 1-6	1	FOR 220 HP BSIII ENGINES WITH VE 6 FIP & 220 HP BS II ENIGNES	SUPERCEDED BY 64.10303-6005
2	51.10303-6220	HIGH PRESSURE PIPE CYL. 1-4	1	FOR 180 HP ENGINES ONLY	
3	64.90020-0103	HHS M10 X 25	1	FOR 180 HP ENGINES ONLY	
4	64.90710-0027	PLAIN WASHER M10 X 25	1	FOR ALL MODELS	
5	64.97485-0001	HOLDER	1	FOR 180 HP ENGINES ONLY	

DISTRIBUTOR PUMP VE6 (BS II & BS III)

Diagram No. 67

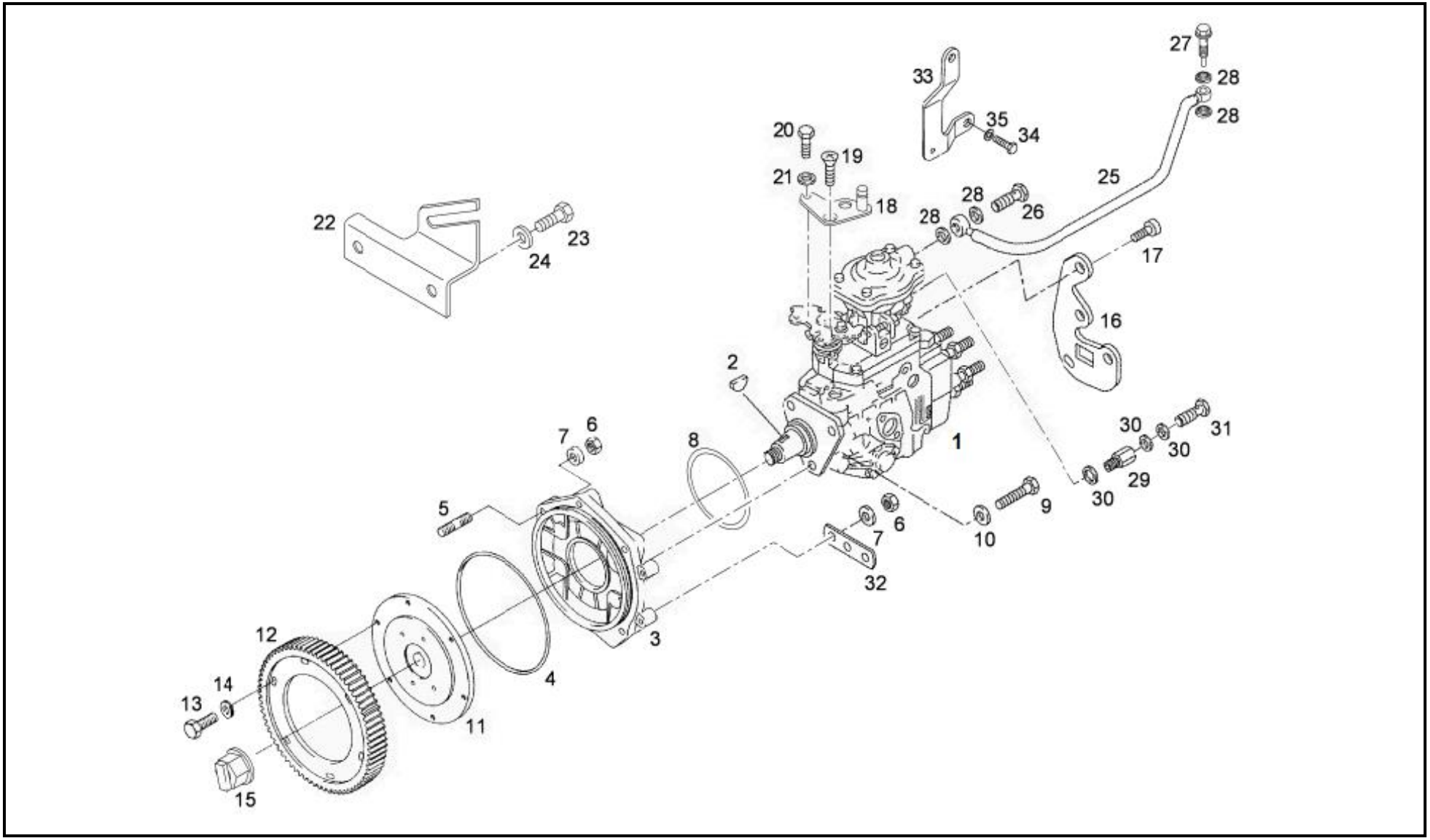

DISTRIBUTOR PUMP VE6 (BS II & BS III) Diagram No. 67

SR	PART NO.	DESCRIPTION	QTY	APPLICABLE MODEL	REMARKS
1	64.11103-7003	FUEL INJECTION PUMP VE6	1	FOR 220 HP BS II ENGINES ONLY	
1	64.11103-7009	FIP VE6 (BSIII) & KKSB	1	FOR 220 HP BS III ENGINES WITH VE 6 FIP	FOR VEHICLES BEFORE VIN : 13235
1	64.11103-7011	FIP (VE6 BSIII) – PH 2	1	FOR 220 HP BS III ENGINES WITH VE 6 FIP	FOR VEHICLES FROM VIN : 13235
2	64.94091-0001	WOOD RUFF KEY 4X6.5-ST60K -2 DIN 6888	1	FOR VE6 FIP BS II & BSIII ONLY	
3	51.11401-0197	PUMP MTG FLANGE	1	FOR VE6 FIP BS II & BSIII ONLY	
4	64.96501-0064	O RING 180X4 N-FPM 1-70 MAN 356	1	FOR VE6 FIP BS II & BSIII ONLY	
5	64.90201-0008	STUD M8X40-8.8 DIN 939	5	FOR VE6 FIP BS II & BSIII ONLY	
6	64.90501-0037	HEX NUT M8X1.25 DIN934-8 A3C	5	FOR VE6 FIP BS II & BSIII ONLY	
7	64.90710-0026	PLAIN WASHER A8.4 DIN125-ST A3C	5	FOR VE6 FIP BS II & BSIII ONLY	
8	64.96501-0101	O RING 50X2-FPM1-70 MAN 356	1	FOR VE6 FIP BS II & BSIII ONLY	
9	64.90020-0099	HEX HEAD SCREW M8X35 DIN933-8.8 PHR	3	FOR VE6 FIP BS II & BSIII ONLY	
10	64.90710-0009	SPECIAL WASHER	3	FOR VE6 FIP BS II & BSIII ONLY	
11	64.11301-0003	HUB FOR DRIVE SHAFT	1	FOR VE6 FIP BS II & BSIII ONLY	
12	64.11301-0002	DRIVE GEAR FOR FIP	1	FOR VE6 FIP BS II & BSIII ONLY	
13	64.90020-0172	HEX SCREW M8X25-10.9 MAN183 PHR DIN	6	FOR VE6 FIP BS II & BSIII ONLY	
14	64.90710-0009	SPECIAL WASHER	6	FOR VE6 FIP BS II & BSIII ONLY	
15	64.11310-0002	COUPLING NUT (COUPLER)	1	FOR VE6 FIP BS II & BSIII ONLY	
16	64.11402-0004	SUPPORT PLATE ON VE PUMP	1	FOR VE6 FIP BS II & BSIII ONLY	

17	64.90030-0038	SOCKET HD BOLT M6X25 DIN912-10.9	3	FOR VE6 FIP BS II & BSIII ONLY	
18	64.11605-5002	ACCELERATOR LEVER ASSY ON FIP	1	FOR VE6 FIP BS II & BSIII ONLY	FOR VEHICLES FROM VIN : 13235
19	64.90040-0003	COUNTERSUNK SCREW M6X16	1	FOR VE6 FIP BS II & BSIII ONLY	
20	64.90020-0087	HEX HEAD SCREW M6X16 DIN933-8.8 A3C	1	FOR VE6 FIP BS II & BSIII ONLY	
21	64.90710-0033	WASHER A6.4-200HV A3C DIN 125	1	FOR VE6 FIP BS II & BSIII ONLY	
22	64.11640-0002	ABUTMENT BRACKET	1	FOR VE6 FIP BS II & BSIII ONLY	
23	64.90020-0095	HEX HEAD SCREW M8X25 DIN 933-8.8	2	FOR VE6 FIP BS II & BSIII ONLY	
24	64.90710-0034	WASHER A8.4 200HV A3C DIN 125	2	FOR VE6 FIP BS II & BSIII ONLY	
25	64.11801-5001	LDA PIPE ASSY	1	FOR VE6 FIP BS II & BSIII ONLY	
26	64.98150-0015	BANJO BOLT 4-5 DIN 7643	1	FOR VE6 FIP BS II & BSIII ONLY	
27	64.98150-0016	BANJO BOLT	1	FOR VE6 FIP BS II & BSIII ONLY	
28	06.56631-0232	SEALING RING PCS-8.3 X14 –ST/FKM1-80	2	FOR VE6 FIP BS II & BSIII ONLY	
29	64.98131-0012	THREADED PIECE	2	FOR VE6 FIP BS II & BSIII ONLY	
30	06.56631-0234	SEALING RING PCS-12,3 X18 –ST/FKM1-	1	FOR VE6 FIP BS II & BSIII ONLY	
31	64.98150-0013	BANJO BOLT A8 N15036 A3C (M12X1.5)	1	FOR VE6 FIP BS II & BSIII ONLY	
32	64.97480-0006	HOLDER FOR MAGNETIC VALVE	1	FOR VE6 FIP BS II & BSIII ONLY	
33	64.12340-0003	SUPPORT FOR FUEL LINES	4	FOR VE6 FIP BS II & BSIII ONLY	
34	64.90030-0019	SCREW BM8X20-10.9 MAN183 PHR DIN	1	FOR VE6 FIP BS II & BSIII ONLY	
35	64.90710-0009	SPECIAL WASHER	3	FOR VE6 FIP BS II & BSIII ONLY	

Page No. 67		**REVISION NO. 001**			**VERSION: 001**

ACCELERATOR CABLE

Diagram No. 68

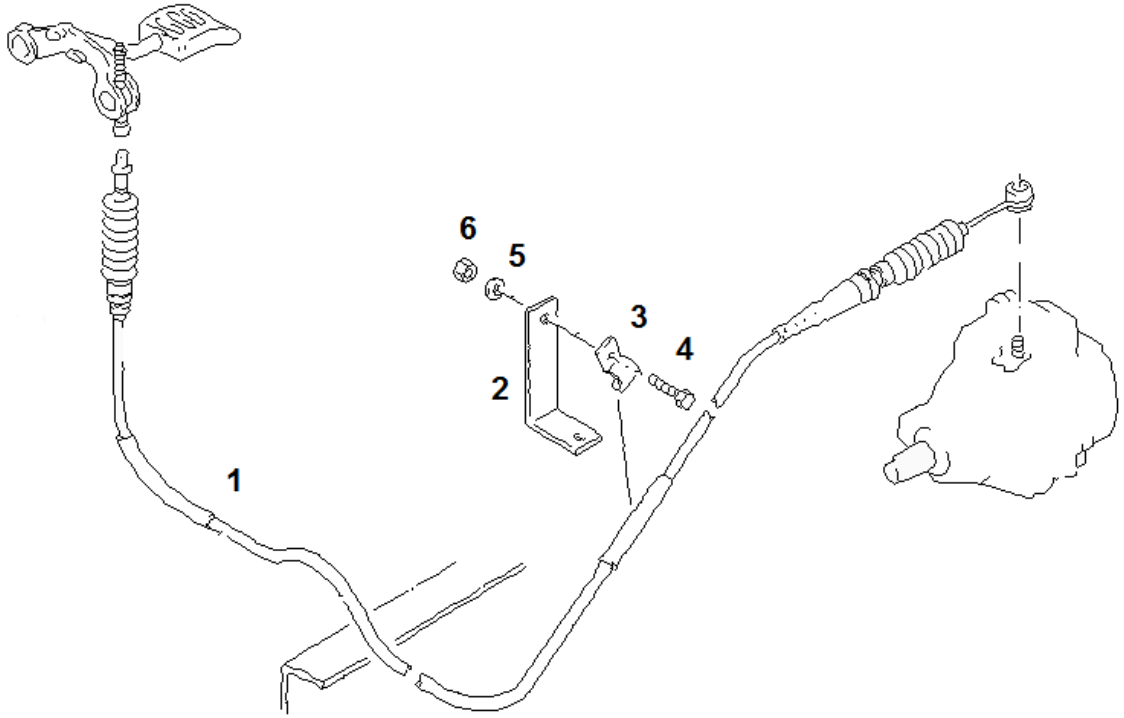

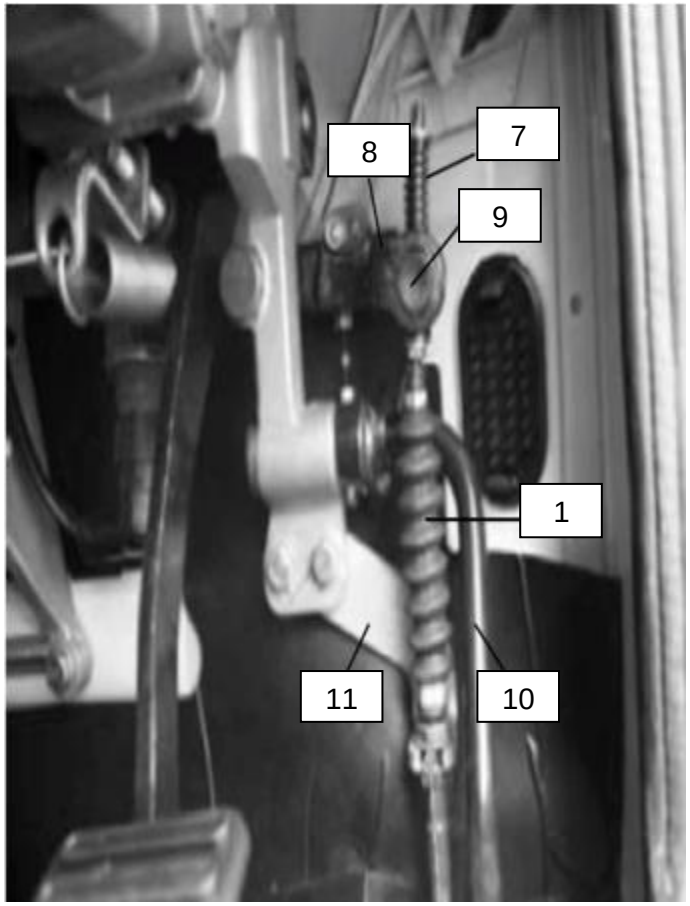

ACCELERATOR CABLE

Diagram No. 68

SR	PART NO.	DESCRIPTION	QTY	APPLICABLE MODEL	REMARKS
1	64.95501-6007	ACCELERATOR CABLE / BOWDEN CABLE (L 2350)	1	FOR 220 HP BS II & BS III ENIGNES WITH VE 6 FIP ONLY	
2	64.97486-0002	ANGLE	1	FOR 220 HP BS II & BS III ENIGNES WITH VE 6 FIP ONLY	
3	64.97401-0035	PIPE CLAMP 8MM DIA	1	FOR 220 HP BS II & BS III ENIGNES WITH VE 6 FIP ONLY	
4	64.90020-0176	HEX. SCREW M6X16 DIN 933-8.8 MAN183-B1	1	FOR 220 HP BS II & BS III ENIGNES WITH VE 6 FIP ONLY	
5	06.16739-0011	SPRING WASHER A6 MAN183-B1 DIN 128	1	FOR 220 HP BS II & BS III ENIGNES WITH VE 6 FIP ONLY	
6	64.90501-0042	HEX. NUT M6 DIN 934-8 MAN183-B1	1	FOR 220 HP BS II & BS III ENIGNES WITH VE 6 FIP ONLY	
7	64.97601-0024	COMPRESSION SPRING 2X10X38.5	1	FOR 220 HP BS II & BS III ENIGNES WITH VE 6 FIP ONLY	
8	64.48401-0001	LEVER	1	FOR 220 HP BS II & BS III ENIGNES WITH VE 6 FIP ONLY	
9	64.91020-0013	BOLT	1	FOR 220 HP BS II & BS III ENIGNES WITH VE 6 FIP ONLY	
10	81.48201-5102	ACCELERATOR PEDAL W/O EDC	1	FOR 220 HP BS II & BS III ENIGNES WITH VE 6 FIP ONLY	
11	64.48240-0007	ABUTMENT BRACKET FOR ACCELERATOR	1	FOR 220 HP BS II & BS III ENIGNES WITH VE 6 FIP ONLY	

SPEED LIMITER KIT **Diagram No. 69**

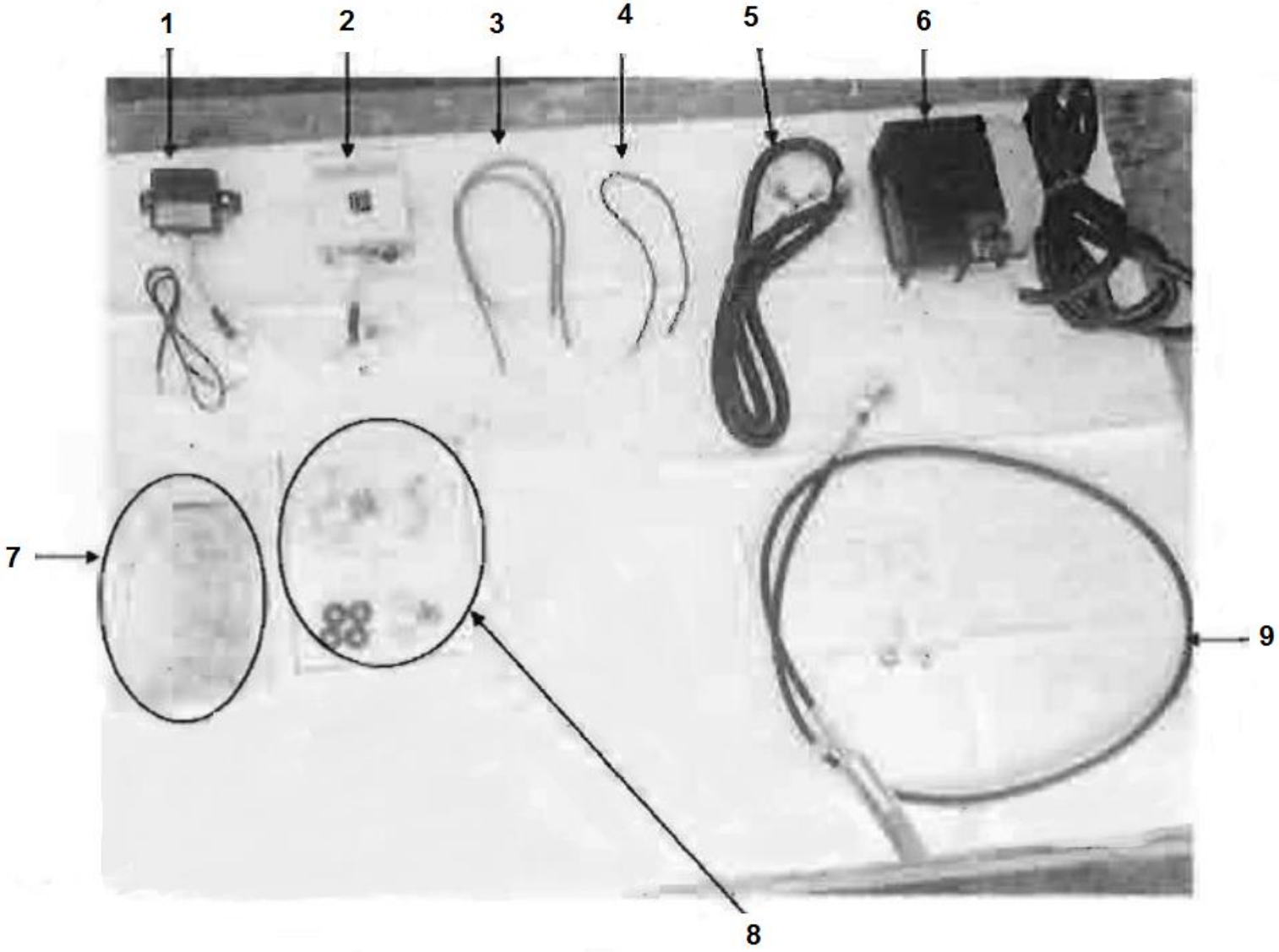

SPEED LIMITER KIT

Diagram No. 69

SR	PART NO.	DESCRIPTION	QTY	APPLICABLE MODEL	REMARKS
1	64.25444-6006	BOOSTER BOX	1	FOR 220 HP ENGINES BS II & III WITH VE 6 FIP	
2	64.25935-6007	ECU	1	FOR 220 HP ENGINES BS II & III WITH VE 6 FIP	
3	64.25419-6016	ASSY WIRING HARNESS	1	FOR 220 HP ENGINES BS II & III WITH VE 6 FIP	
4	64.25419-6017	ASSY WIRING HARNESS	1	FOR 220 HP ENGINES BS II & III WITH VE 6 FIP	
5	64.25419-6018	ASSY WIRING HARNESS	1	FOR 220 HP ENGINES BS II & III WITH VE 6 FIP	
6	64.26201-6001	MOTOR UNIT	1	FOR 220 HP ENGINES BS II & III WITH VE 6 FIP	
7	64.25902-6008	SEALING KIT	1	FOR 220 HP ENGINES BS II & III WITH VE 6 FIP	
8	64.25902-6009	INSTLLATION KIT	1	FOR 220 HP ENGINES BS II & III WITH VE 6 FIP	
9	64.95501-6009	CONTROL CABLE	1	FOR 220 HP ENGINES BS II & III WITH VE 6 FIP	

ENGINE HARNESS TRAY (2 VCR)

Diagram No. 70

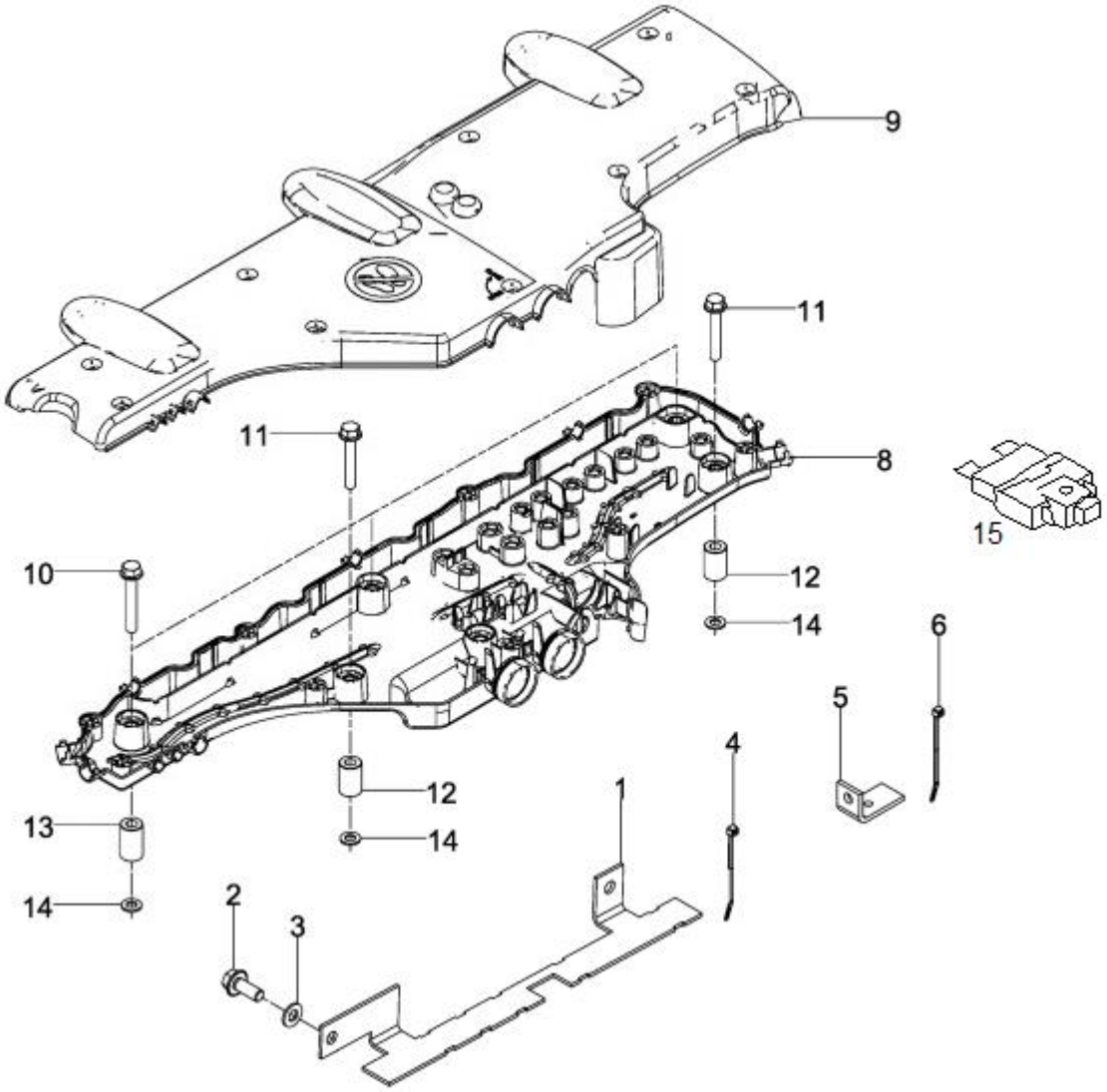

ENGINE HARNESS TRAY (2 VCR) Diagram No. 70

SR	PART NO.	DESCRIPTION	QTY	APPLICABLE MODEL	REMARKS
1	64.25441-0021	SUPPORT BKT -WIRING HARNESS	1	FOR 2 VCR ENGINES ONLY	
2	64.90020-0197	HEX BOLT M10X25-8.8 DIN 933 MAN183-B1	2	FOR 2 VCR ENGINES ONLY	
3	64.90710-0027	PLAIN WASHER A10.5 DIN125-ST A3C	2	FOR 2 VCR ENGINES ONLY	
4	64.97401-0008	CABLE CLAMP 4.8X166	5	FOR 2 VCR ENGINES ONLY	
5	64.25441-0006	ANGLE BRACKET FOR CABLE HARNESS SUPPORT	1	FOR 2 VCR ENGINES ONLY	
6	64.97401-0008	CABLE CLAMP 4.8X166	1	FOR 2 VCR ENGINES ONLY	
8	64.25424-6161	ENGINE HARNESS ASSEMBLY (2VCR) WITH LOWER TRAY	1	FOR 2 VCR ENGINES ONLY	FOR VEHICLES BEFORE VIN: 16106
8	64.25424-6049	CABLE TRAY ENG HARNESS EDC7 W/O FLAME START	1	FOR 2 VCR ENGINES ONLY	FOR VEHICLES FROM VIN: 16106
9	85.25424-0006	HARNESS TRAY UPPER	1	FOR 2 VCR ENGINES ONLY	
10	64.90020-0072	HHB M8X55 DIN 931-8.8 BTS 170202-22	2	FOR 2 VCR ENGINES ONLY	
11	64.90020-0364	HEX HEAD BOLT M8X60 DIN931-8.8 A3C	3	FOR 2 VCR ENGINES ONLY	
12	64.91701-0035	BUSH 9X18X30.5	3	FOR 2 VCR ENGINES ONLY	
13	64.91701-0034	SPACER	2	FOR 2 VCR ENGINES ONLY	
14	64.90710-0026	PLAIN WASHER A8.4 DIN125-ST A3C	5	FOR 2 VCR ENGINES ONLY	
15	07.93810-0006	FUSE 25A	1	FOR 2 VCR ENGINES ONLY	FUSE FITTED IN HARNESS TRAY
15	07.93310-0012	FUSE 125A	1	FOR 2 VCR ENGINES ONLY	FUSE FITTED IN HARNESS TRAY.FIG NOT SHOWN.

ALTERNATOR & MOUNTING & BELT (2 & 4 VCR)

Diagram No. 71

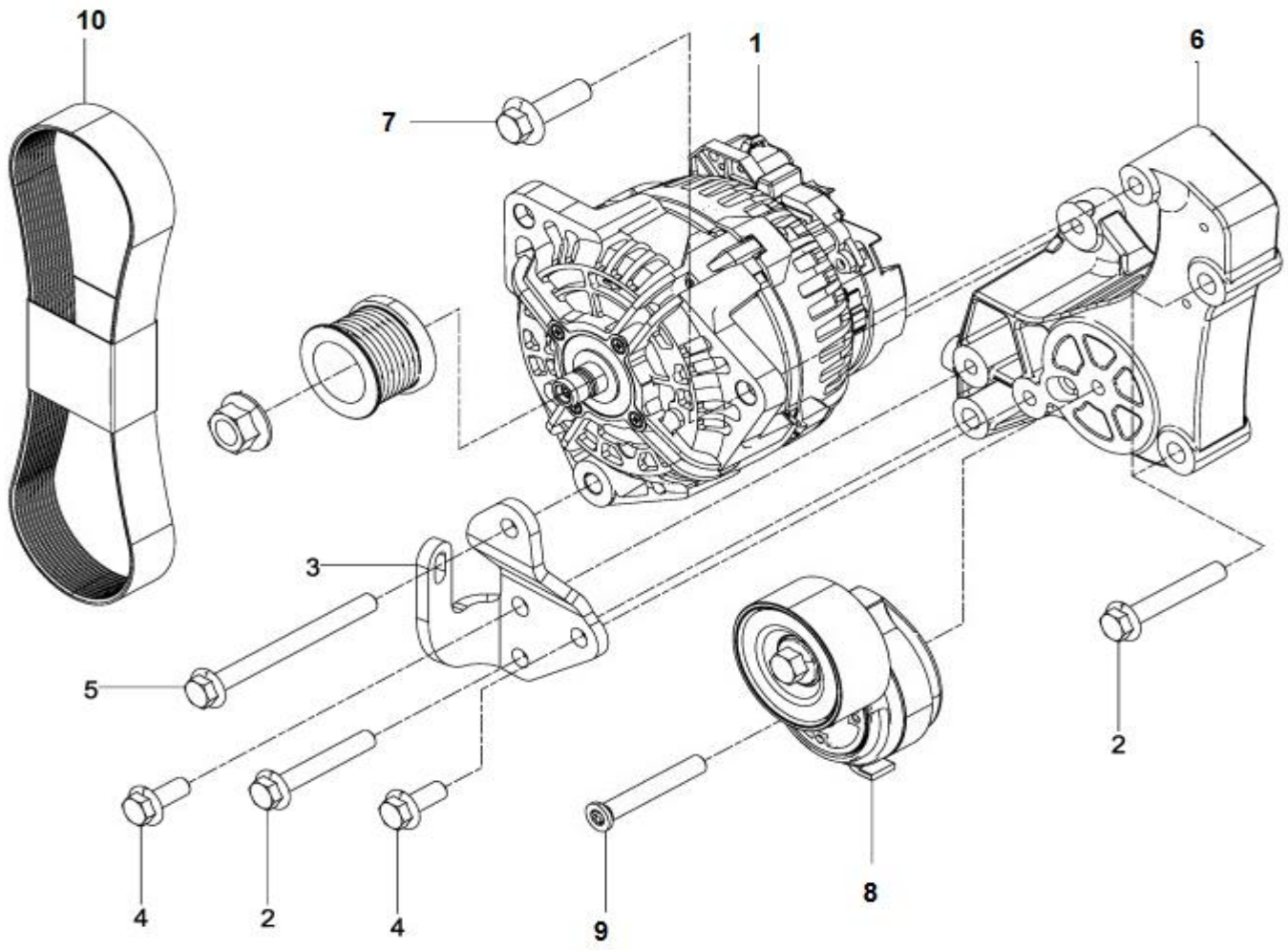

ALTERNATOR & MOUNTING & BELT (2 & 4 VCR) Diagram No. 71

SR	PART NO.	DESCRIPTION	QTY	APPLICABLE MODEL	REMARKS
1	64.26101-7004	ALTERNATOR – 80A (2VCR)	1	FOR 2 & 4 VCR ENGINES ONLY	
2	64.90030-0053	FLANGE BOLT M10X65-10.9 MAN183B1 DIN6921	3	FOR 2 & 4 VCR ENGINES ONLY	
3	64.19101-0515	ALTERNATOR MOUNTING BKT	1	FOR 2 & 4 VCR ENGINES ONLY	
4	06.03216-8405	BOLT M10X25-10.9 MAN183-B1 DIN 6921	2	FOR 2 & 4 VCR ENGINES ONLY	
5	64.90030-0055	FLANGEBOLT M10X110-10.9 MAN183B1 DIN6921	1	FOR 2 & 4 VCR ENGINES ONLY	
6	64.19101-0515	ALTERNATOR SUPPORT BRACKET	1	FOR 2 & 4 VCR ENGINES ONLY	
7	64.90030-0056	FLANGE BOLT M12X40-10.9 MAN183B1 DIN6921	1	FOR 2 & 4 VCR ENGINES ONLY	
8	51.95800-7499	AUTOMATIC BELT TENSIONER	1	FOR 2 & 4 VCR ENGINES ONLY	
9	64.90040-0052	C. S BOLT - ALTERNATOR M10X70- 10.9	1	FOR 2 & 4 VCR ENGINES ONLY	
10	51.96820-0243	POLY V BELT 8X1275	1	FOR 2 & 4 VCR ENGINES ONLY	

AC COMPRESSOR MOUNTING & BELT

Diagram No. 72

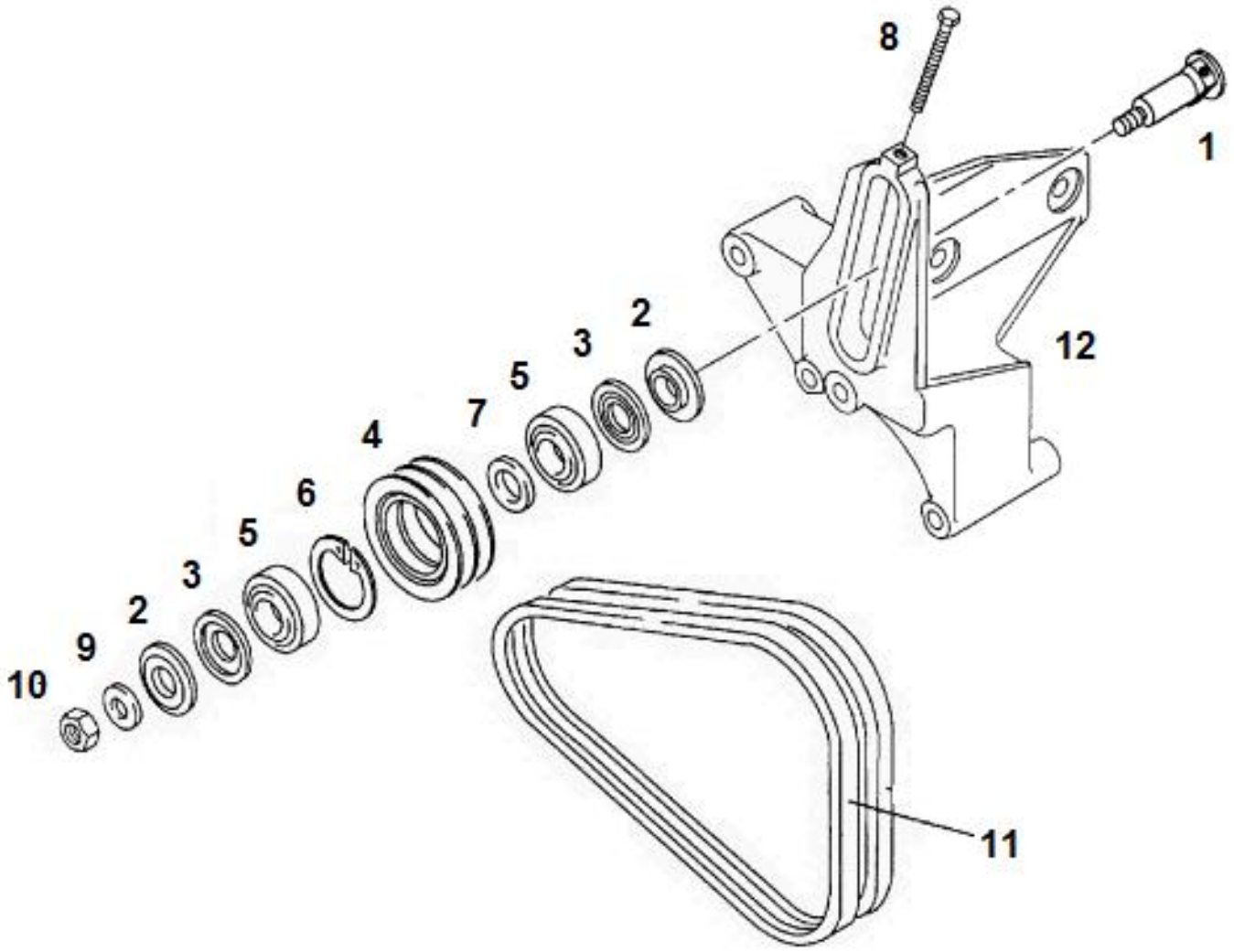

AC COMPRESSOR MOUNTING & BELT

Diagram No. 72

SR	PART NO.	DESCRIPTION	QTY	APPLICABLE MODEL	REMARKS
1	64.91020-0102	PIN	1	COMMON FOR AC MODELS ONLY	
2	64.91701-0011	SPLASH RING	2	COMMON FOR AC MODELS ONLY	
3	64.93410-0019	NILOS RING (SEALING)	2	COMMON FOR AC MODELS ONLY	
4	64.95820-0001	V BELT PULLEY	1	COMMON FOR AC MODELS ONLY	
5	64.93410-0024	GROOVED BALL BEARING 6204 2RS1/C3-FAG	2	COMMON FOR AC MODELS ONLY	
6	64.90820-0023	CIRCLIP 47X1.75-ZNPHR5F DIN 472	1	COMMON FOR AC MODELS ONLY	
7	64.90710-0073	WASHER D21/30/2.2	1	COMMON FOR AC MODELS ONLY	
8	64.90020-0286	HEX SCREW M8X120-8.8A MAN183 PHR DIN 93	1	COMMON FOR AC MODELS ONLY	
9	64.90710-0072	WASHER D11/35/5	1	COMMON FOR AC MODELS ONLY	
10	06.11240-0406	HEX. NUT BM10-8 MAN183-B1 M711260	1	COMMON FOR AC MODELS ONLY	
11	06.58073-2331	BELT C-13X1290,MAN 316	1	COMMON FOR AC MODELS ONLY	
12	64.77940-0001	MTG BKT FOR COMPRESSOR	1	COMMON FOR AC MODELS ONLY	

AIR COMPRESSOR MOUNTING (2 & 4 VCR)

Diagram No. 73

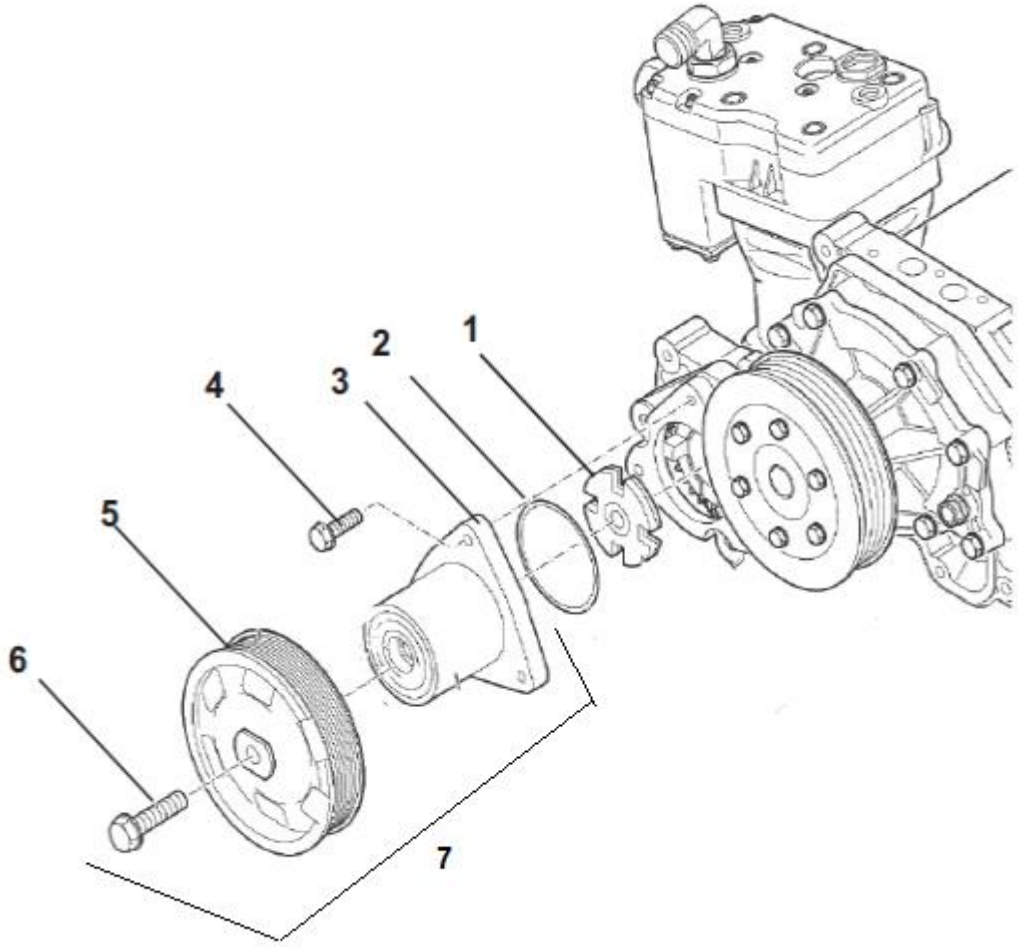

AIR COMPRESSOR MOUNTING (2 & 4 VCR) Diagram No. 73

SR	PART NO.	DESCRIPTION	QTY	APPLICABLE MODEL	REMARKS
1	51.47104-0040	CARRIER PLATE	1	COMMON FOR 2 & 4 VCR ENGINES ONLY	
2	06.56936-2709	O RING 73X3 N-FPM-1-70	1	COMMON FOR 2 & 4 VCR ENGINES ONLY	
3	64.38507-0001	HOUSING ASSEMBLY	1	COMMON FOR 2 & 4 VCR ENGINES ONLY	SUPERCEDED BY 51.38507-0124
4	64.90030-0067	BOLT M10X35-10.9	3	COMMON FOR 2 & 4 VCR ENGINES ONLY	
5	64.95820-0126	PULLEY	1	COMMON FOR 2 & 4 VCR ENGINES ONLY	
6	64.90020-0406	LEFT HAND THREAD BOLT	1	COMMON FOR 2 & 4 VCR ENGINES ONLY	
7	64.38500-6207	ASSEMBLY ENGINE FRONT PTO DRIVE	1	COMMON FOR 2 & 4 VCR ENGINES ONLY	CONSISTS OF SR 3, 5 & 6.

DISTRIBUTOR PUMP VP 44 WITH PRESSURE REGULATOR

Diagram No. 74

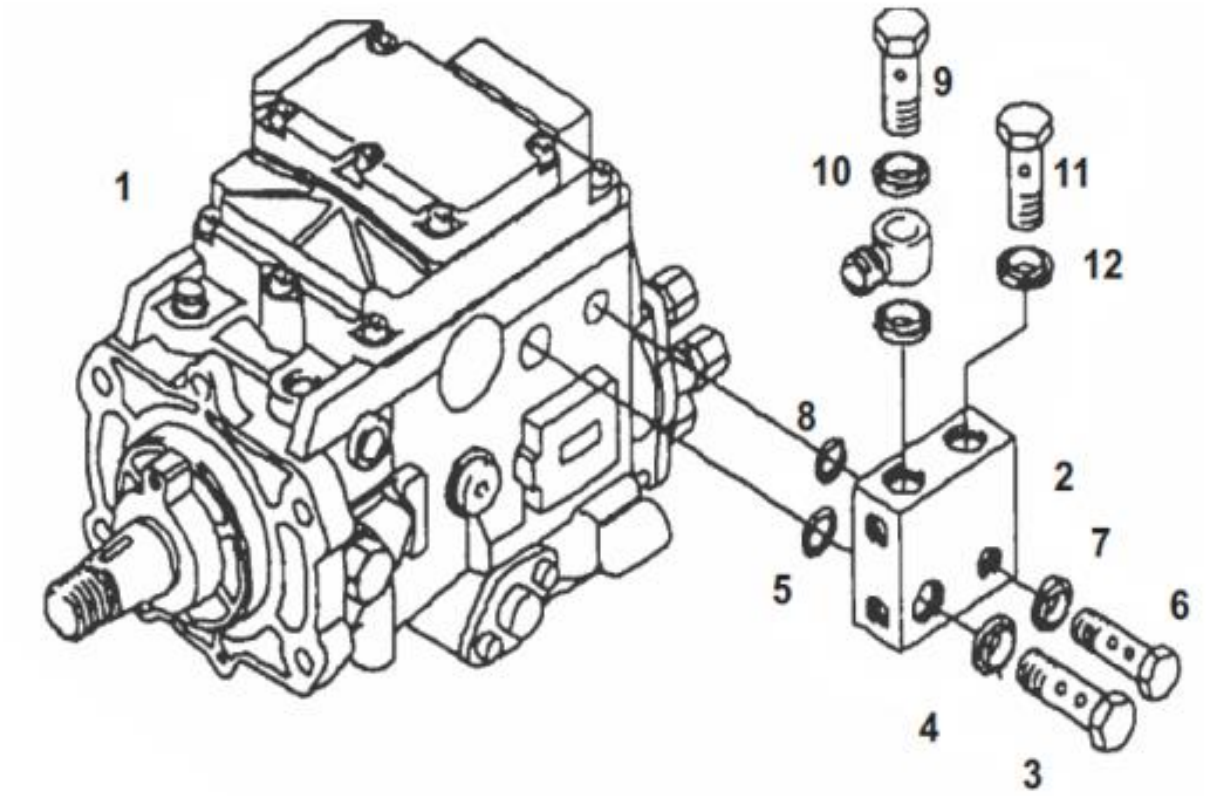

DISTRIBUTOR PUMP VP 44 WITH PRESSURE REGULATOR Diagram No. 74

SR	PART NO.	DESCRIPTION	QTY	APPLICABLE MODEL	REMARKS
1	64.11103-7001	FUEL INJECTION PUMP VP44	1	FOR 280 HP BS III ENGINES WITH VP 44 FIP ONLY	
1	64.11103-7008	FUEL INJECTION PUMP VP44	1	FOR 220 HP BS III WITH VP 44 FIP ONLY	
1	64.11103-7002	FUEL INJECTION PUMP VP44	1	FOR 180 HP ENGINES ONLY	
2	51.11110-0004	PRESSURE REGULATOR CASING	1	FOR 280 HP ENGINES WITH VP 44 FIP , 220 HP BS III ENGINES WITH VP 44 FIP & 180 HP ENGINES	
3	64.98150-0004	BANJO BOLT M14X1.5	1	FOR ALL ENGINES EXCEPT BS II & 220 HP ENGINES WITH VE 6 BS III FIP	
4	06.56631-0106	SEALING RING BS-14,7X22,O-ST	1	COMMON FOR ALL MODELS	
5	64.96501-0061	O RING 14X2.50N-FPM1-70	1	FOR 280 HP ENGINES WITH VP 44 FIP , 220 HP BS III ENGINES WITH VP 44 FIP & 180 HP ENGINES	06.56936-0747 ALTERNATE
6	64.98150-0005	BANJO BOLT M12X1.5	1	FOR 280 HP ENGINES WITH VP 44 FIP , 220 HP BS III ENGINES WITH VP 44 FIP & 180 HP ENGINES	
7	06.56631-0105	SEALING RING BS-12,7X18,0-ST	1	COMMON FOR ALL MODELS	
8	64.96501-0060	O RING 12X2 N-FPM1-70 MAN 356	1	FOR 280 HP ENGINES WITH VP 44 FIP , 220 HP BS III ENGINES WITH VP 44 FIP & 180 HP ENGINES	06.56936-0639 ALTERNATE
9	51.11107-0028	OVERFLOW RELIEF VALVE	1	FOR 280 HP ENGINES WITH VP 44 FIP , 220 HP BS III ENGINES WITH VP 44 FIP & 180 HP ENGINES	
10	06.56631-0106	SEALING RING BS-14,7X22,	2	COMMON FOR ALL MODELS	
11	51.11107-0027	BY PASS VALVE (INLET)	1	FOR 280 HP ENGINES WITH VP 44 FIP , 220 HP BS III ENGINES WITH VP 44 FIP & 180 HP ENGINES	
12	06.56631-0106	SEALING RING BS-14,7X22,O-ST	1	COMMON FOR ALL MODELS	

DISTRIBUTOR PUMP VP 44 DRIVE AND FASTENING

Diagram No. 75

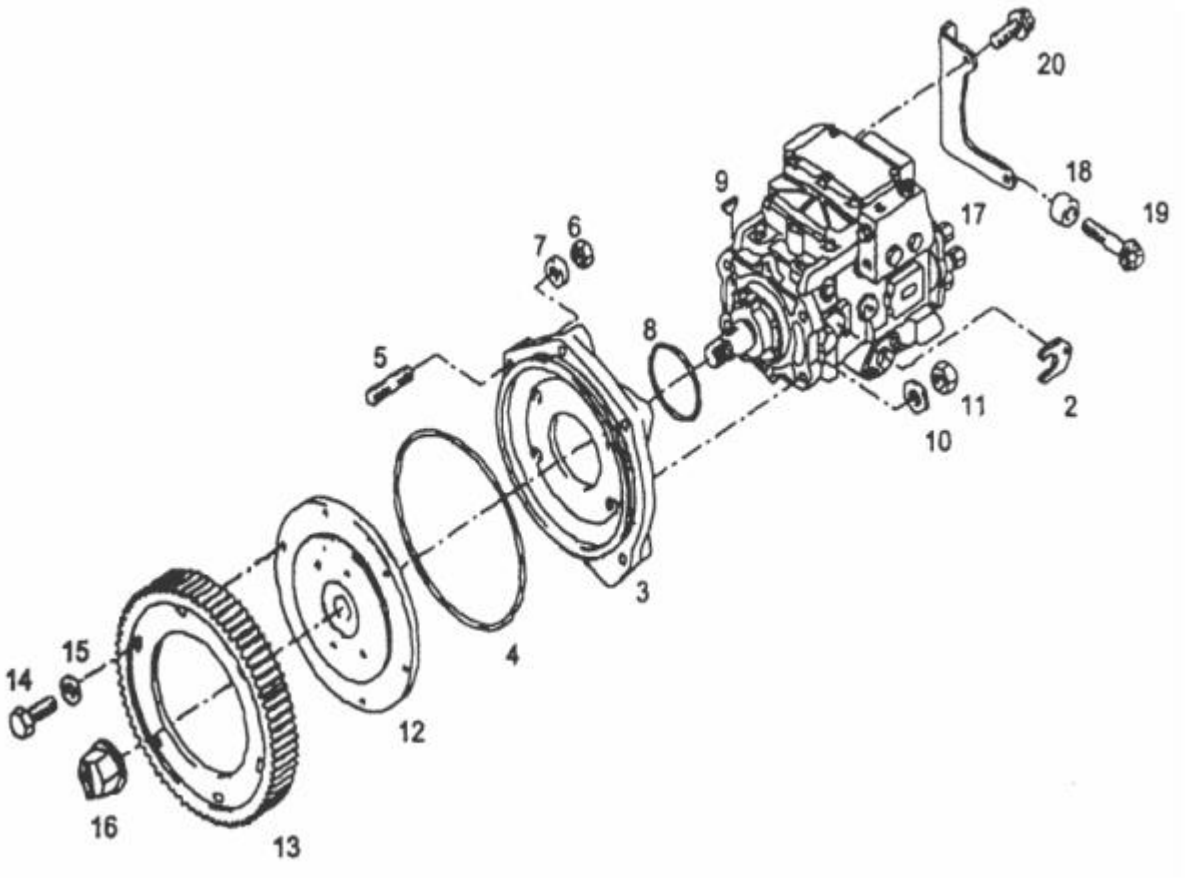

DISTRIBUTOR PUMP VP 44 DRIVE AND FASTENING Diagram No. 75

SR	PART NO.	DESCRIPTION	QTY	APPLICABLE MODEL	REMARKS
2	64.11152-0001	LOCK PLATE	1	COMMON FOR MODELS USING VP 44 FIP	
3	64.11401-0004	FIP MOUNTING FLANGE M/C	1	FOR 280 HP ENGINES WITH VP 44 FIP , 220 HP BS III ENGINES WITH VP 44 FIP & 180 HP ENGINES	
-	64.90030-0031	FLANGE BOLT M10X35	4	FOR ALL ENGINES EXCEPT 2 & 4 VCR ENGINES	
4	64.96501-0064	O RING 180X4 N-FPM 1-70	1	FOR ALL ENGINES EXCEPT 2 & 4 VCR ENGINES	06.56936-4345 ALTERNATE
5	64.90201-0008	STUD M8X40-8.8 DIN 939	5	FOR ALL ENGINES EXCEPT 2 & 4 VCR ENGINES	
6	64.90501-0037	HEX NUT M8X1.25 DIN 934-8	5	COMMON FOR ALL MODELS	
7	64.90710-0026	PL WASHER A8.4 DIN125-ST	5	COMMON FOR ALL MODELS	
8	06.56939-0029	O RING 67.5X4-FPM1-60	1	FOR 280 HP (VP 44 & 2VCR) ENGINES , 220 HP BS III ENGINES WITH VP 44 FIP & 180 HP ENGINES	64.96501-0066 ALTERNATE
9	64.94091-0001	WOOD RUFF KEY 4X6.5-ST60K	1	FOR ALL ENGINES EXCEPT 2 & 4 VCR ENGINES	
10	64.90710-0027	PL WASHER A10.5 DIN125-ST	4	COMMON FOR ALL MODELS	
11	64.90501-0048	HEX NUT M10-8-A3C DIN 934	4	COMMON FOR ALL MODELS	SUPERCEDED BY 06.11240-0406
12	64.11301-0001	HUB FOR DRIVE SHAFT	1	FOR 280 HP ENGINES WITH VP 44 FIP , 220 HP BS III ENGINES WITH VP 44 FIP & 180 HP ENGINES	
13	64.11301-0002	DRIVE GEAR FOR FIP	1	FOR ALL ENGINES EXCEPT 2 & 4 VCR ENGINES	
14	64.90020-0172	HEX SCREW M8X25-10.9	6	FOR ALL ENGINES EXCEPT 2 & 4 VCR ENGINES	
15	64.90710-0009	SPECIAL WASHER	6	FOR ALL ENGINES EXCEPT 2 & 4 VCR ENGINES	
16	51.11310-0006	COUPLING NUT (COUPLER)	1	FOR 280 HP ENGINES WITH VP 44 FIP , 220 HP BS III ENGINES WITH VP 44 FIP & 180 HP ENGINES	

17	64.11402-0001	FIP REAR SUPPORT BRACKET	1	FOR 280 HP ENGINES WITH VP 44 FIP , 220 HP BS III ENGINES WITH VP 44 FIP & 180 HP ENGINES	
18	64.91701-0005	BUSH	1	FOR ALL ENGINES EXCEPT 2 & 4 VCR ENGINES	
19	64.90030-0019	SCREW BM8X20-10.9 MAN183	2	FOR ALL ENGINES EXCEPT 2 & 4 VCR ENGINES	
20	64.90030-0018	SCREW BM8X50-10.9 MAN183	1	FOR ALL ENGINES EXCEPT 2 & 4 VCR ENGINES	
Page No. 75		**REVISION NO. 001**			**VERSION: 001**

AIR COMPRESSOR **Diagram No. 76**

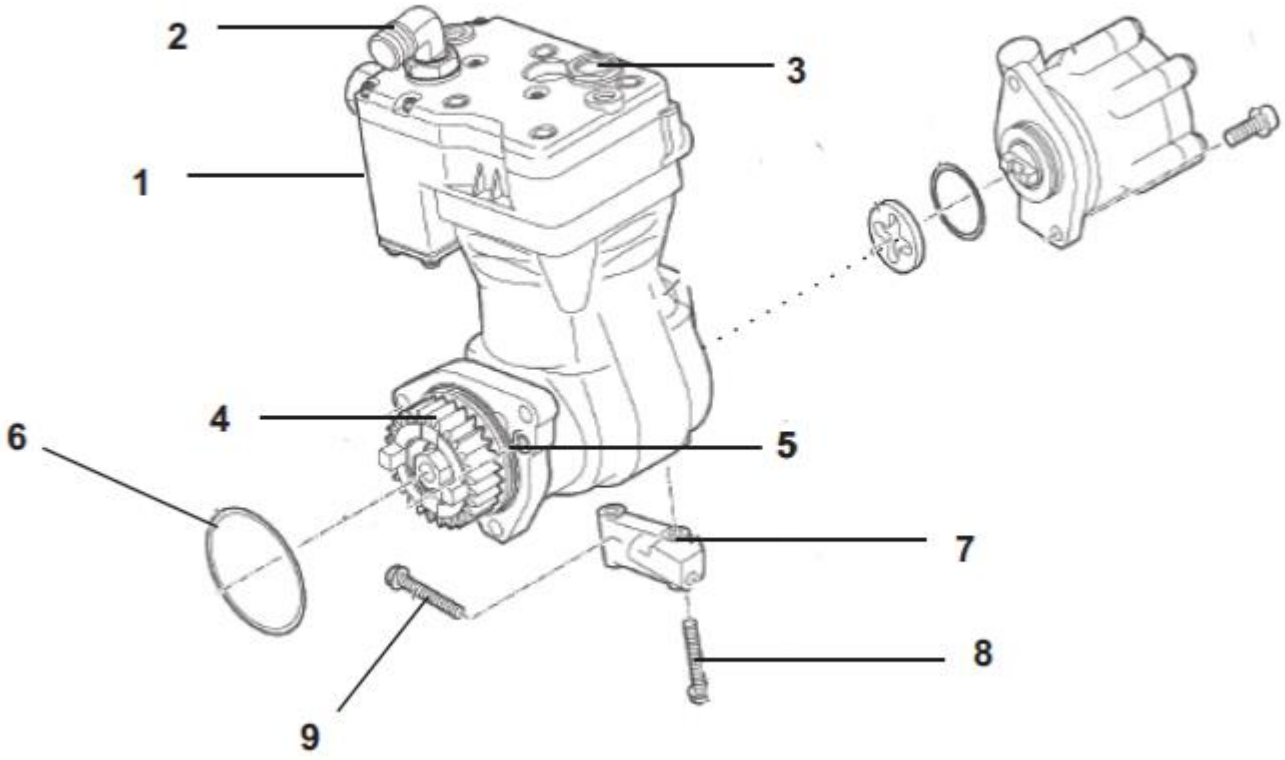

AIR COMPRESSOR

Diagram No. 76

SR	PART NO.	DESCRIPTION	QTY	APPLICABLE MODEL	REMARKS
1	51.54100-7071	AIR COMPRESSOR (238 CC)	1	COMMON FOR 2 VCR ENGINES ONLY	FOR VEHICLES BEFORE VIN MBKMC5JC5FN014071
1	64.54100-7238	SINGLE CYL AIR COMPRESSOR (318CC)	1	COMMON FOR ALL ENGINES EXCEPT 180 HP ENGINES	FOR ALL MODELS FROM VIN MBKMC5JC5FN014071.
1	64.54101-7003	AIR COMPRESSOR (230CC) W/O PR FEATURE	1	COMMON FOR ALL NON 2 & 4 VCR ENGINES.	FOR VEHICLES BEFORE VIN MBKMC5JC5FN014071
1	51.54100-7005	AIR COMPRESSOR 352 CC	1	USED IN BUS APPLICATION ONLY	
2	64.54120-0005	AIR COMPRESSOR INTAKE ELBOW	1	COMMON FOR ALL MODELS EXCEPT 25.180 HL	
3	64.90490-0516	CLOSING PLUG	1	COMMON FOR ALL MODELS EXCEPT 25.180 HL	SUPERCEDED BY 06.08042-0609 & 06.56631-0112
4	64.54210-0236	DRIVE GEAR	1	COMMON FOR 2 & 4 VCR ENGINES WITH 318 CC AIR COMPRESSOR	
4	64.54210-0003	DRIVE GEAR FOR AIR COMPRESSOR	1	COMMON FOR NON 2 & 4 VCR ENGINES WITH 318CC AIR COMPRESSOR	
4	64.54210-0001	DRIVE GEAR FOR AIR COMPRESSOR	1	COMMON FOR MODELS WITH 230CC AIR COMPRESSOR ONLY	
5	06.56938-0522	O RING 10X3 FPM 1-80 MAN 356	1	COMMON FOR ALL MODELS	
6	64.96501-0063	O RING 85X3 N-FPM 1-70 MAN 356	1	COMMON FOR ALL MODELS	06.56936-2969 ALTERNATE
7	64.54302-0002	SUPPORT PIECE FOR COMPRESSOR	1	COMMON FOR ALL MODELS USING 238 CC & 318 CC AIR COMPRESSOR	
7	64.54302-0001	SUPPORTING BLOCK	1	COMMON FOR ALL MODELS USING 230 CC AIR COMPRESSOR	
8	64.90020-0073	HHB M8X60 DIN 931-8.8	2	COMMON FOR ALL MODELS	
9	64.90020-0157	HEX SCREW M8X45-8.8	1	COMMON FOR ALL MODELS	

ACCELERATOR PEDAL **Diagram No.77**

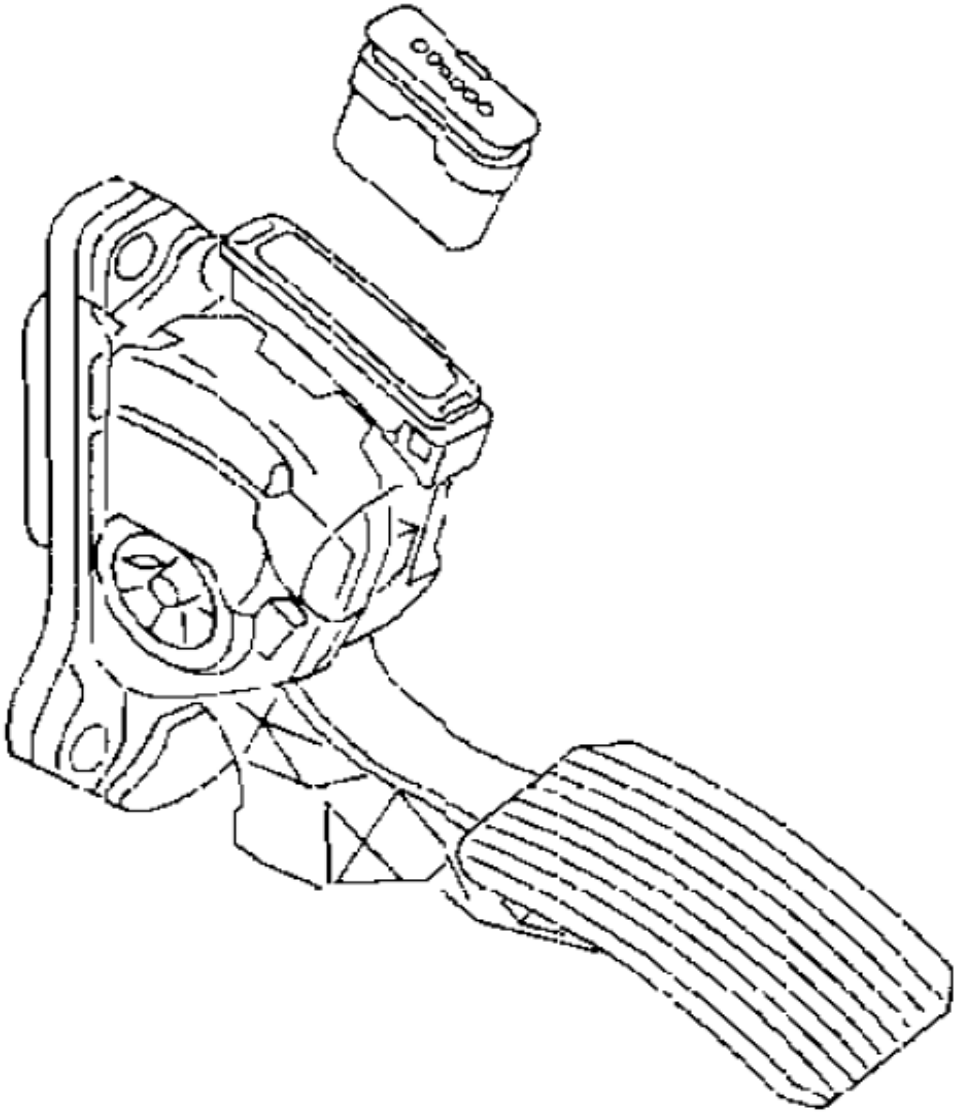

ACCELERATOR PEDAL

Diagram No.77

SR	PART NO.	DESCRIPTION	QTY	APPLICABLE MODEL	REMARKS
1	81.25970-6106	ACCELERATOR PEDAL WITH SENSOR	1	COMMON FOR MODELS WITH 2 & 4 VCR ENGINES ONLY	
Page No. 77		**REVISION NO. 001**			**VERSION: 001**

ELECTRONIC CONTROL UNIT

Diagram No.78

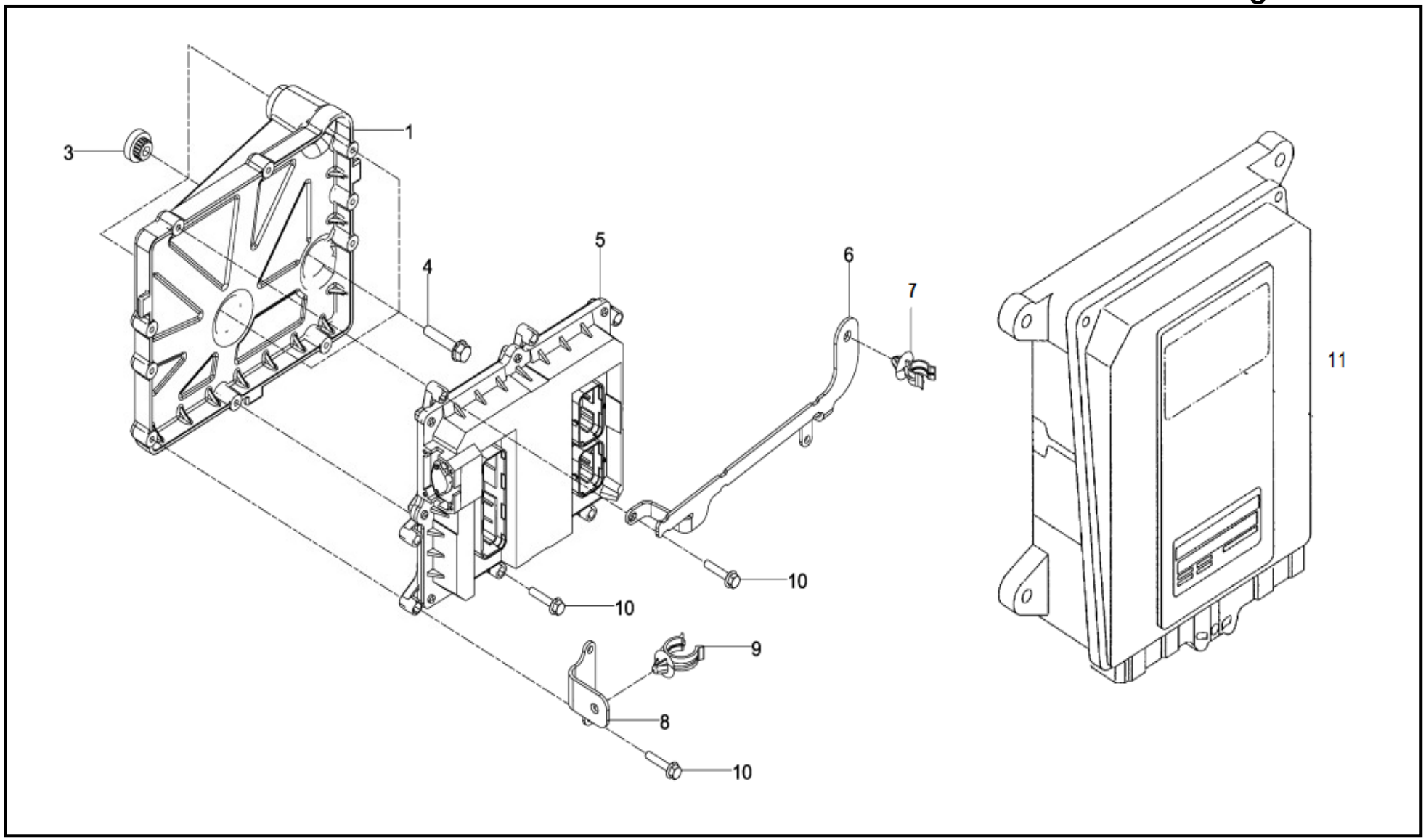

ELECTRONIC CONTROL UNIT

Diagram No. 78

SR	PART NO.	DESCRIPTION	QTY	APPLICABLE MODEL	REMARKS
1	64.11640-0287	TRAY FOR ECU MTG	1	FOR 2 VCR ENGINES ONLY	
3	51.96210-0077	RUBBER BUFFER	6	FOR 2 & 4 VCR ENGINES ONLY	
4	64.90030-0062	FLANGE BOLT M8X40-10.9 MAN183-B1 DIN6921	3	FOR 2 & 4 VCR ENGINES ONLY	
5	64.25803-7001	ECU WITH DATASET (EDC7C32)	1	FOR 280 HP 2 VCR ENGINES ONLY	
5	64.25803-7002	ECU WITH DATASET (EDC7C32) – 230HP	1	FOR 230 HP 2 VCR ENGINES ONLY	
6	64.25441-0024	BRACKET FOR EDC CONTROL UNIT	1	FOR 2 VCR ENGINES ONLY	
7	64.97430-0002	SUPPORT FOR TUBE DN13	1	FOR 2 VCR ENGINES ONLY	
8	64.25441-0025	CABLE HARNESS SUPPORT BKT ON ECU	1	FOR 2 VCR ENGINES ONLY	
9	64.97430-0004	SUPPORT FOR TUBE DN22	1	FOR 2 VCR ENGINES ONLY	
10	64.90030-0064	FLANGE BOLT M6X30-10.9 MAN183-B1 DIN6921	8	FOR 2 & 4 VCR ENGINES ONLY	
11	64.11616-7004	ELECTRONIC CONTROL UNIT –EDC	1	FOR 280 HP ENGINES WITH VP 44 FIP ONLY	
11	64.11616-7005	ELECTRONIC CONTROL UNIT – EDC(MS 6.4)	1	FOR 220 HP ENGINES WITH VP 44 FIP ONLY	
11	64.11616-7001	ELECTRONIC CONTROL UNIT –EDC (R4)	1	FOR 180 HP ENGINES WITH VP 44 FIP ONLY	

COMPONENTS FOR FUEL LINES

Diagram No. 79

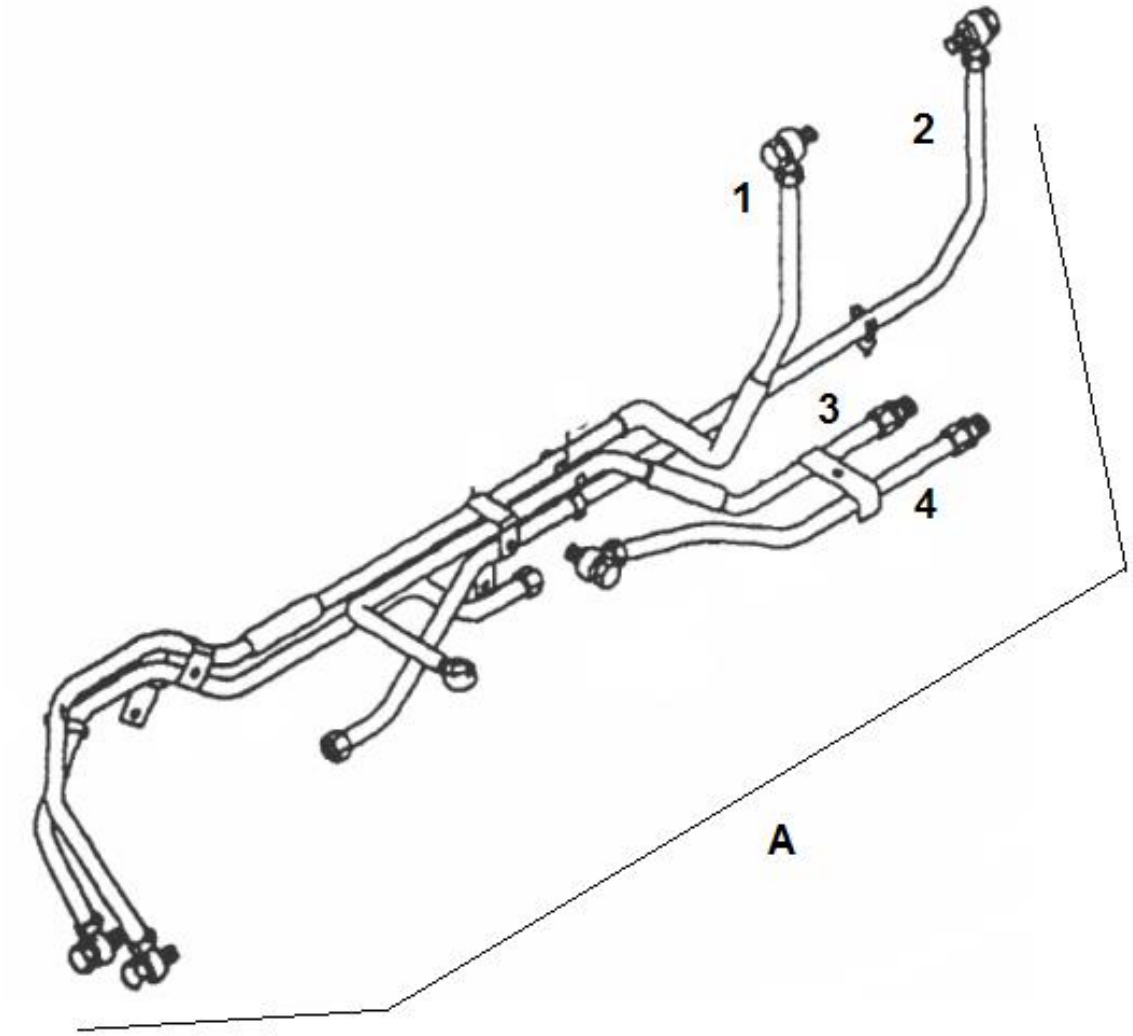

COMPONENTS FOR FUEL LINES

Diagram No. 79

SR	PART NO.	DESCRIPTION	QTY	APPLICABLE MODEL	REMARKS
A	64.12300-6001	FUEL SUPPLY PIPES	1	FOR 280 HP & 220 HP BS III ENGINES WITH VP 44 FIP.	
1	64.12301-0007	FUEL LINE FEED PUMP TO FILTER	1	FOR 280 HP & 220 HP BS III ENGINES WITH VP 44 FIP.	
2	64.12301-0008	FUEL LINE FILTER TO FIP	1	FOR 280 HP & 220 HP BS III ENGINES WITH VP 44 FIP.	
3	64.12301-0005	FUEL LINE SUCTION TO HAND PUMP	1	FOR 280 HP & 220 HP BS III ENGINES WITH VP 44 FIP.	
4	64.12301-0006	FUEL LINE HAND PUMP TO FEED PUMP	1	FOR 280 HP & 220 HP BS III ENGINES WITH VP 44 FIP.	
Page No. 79		**REVISION NO. 001**			**VERSION: 001**

FUEL SUPPLY PIPES (2 VCR)

Diagram No. 80

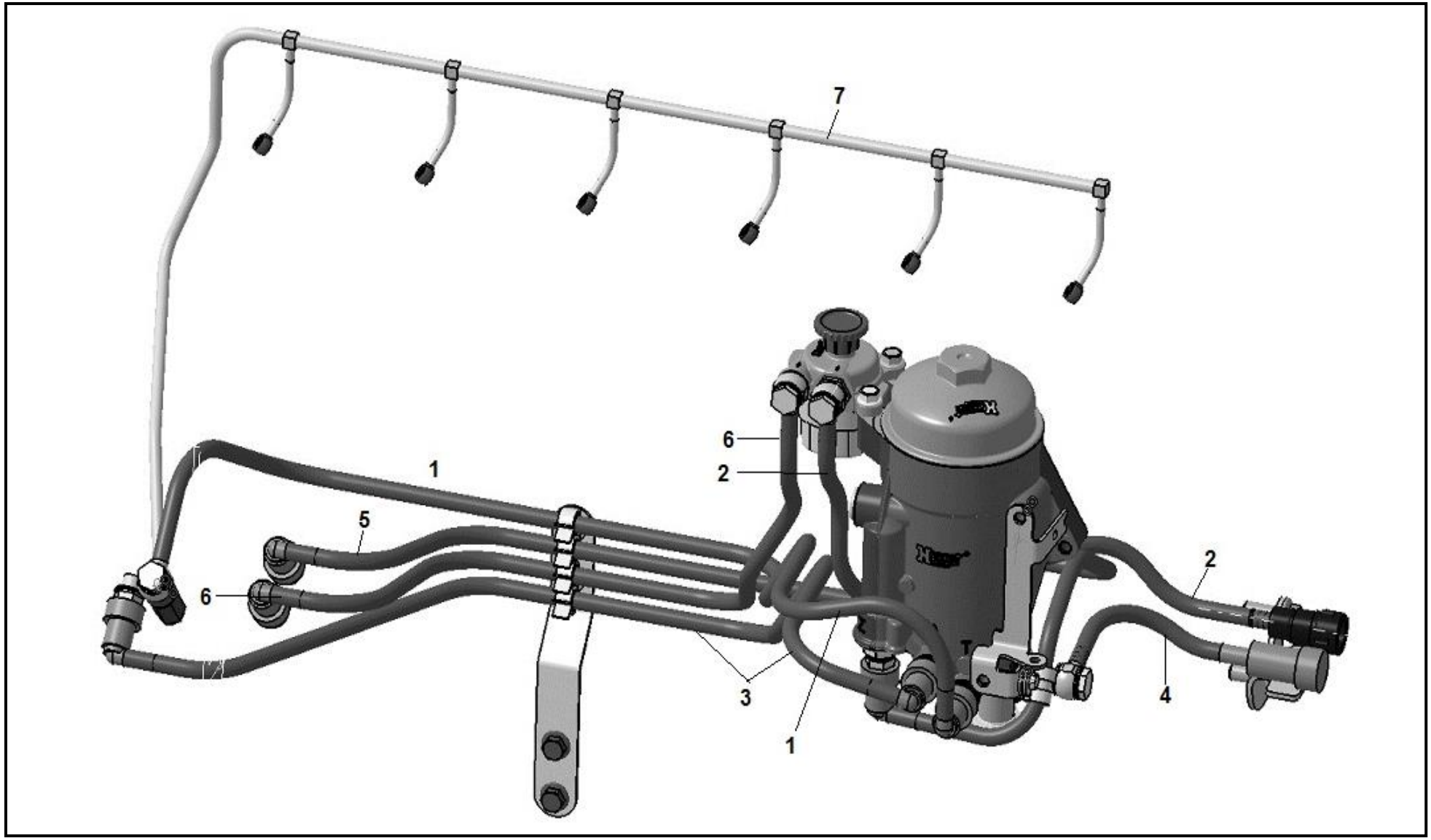

FUEL SUPPLY PIPES (2 VCR) Diagram No. 80

SR	PART NO.	DESCRIPTION	QTY	APPLICABLE MODEL	REMARKS
1	64.12305-5304	FUEL LINE- HP PUMP TO FUEL FILTER	1	COMMON FOR 2 VCR ENGINES ONLY	
2	64.12304-5002	FUEL LINE (PREFILTER INLET)	1	COMMON FOR 2 VCR ENGINES ONLY	
3	64.12307-5001	FUEL PIPE (FILTER TO HPP)	1	COMMON FOR 2 VCR ENGINES ONLY	
4	64.12305-5002	FUEL RETURN PIPE (FILTER TO TANK)	1	COMMON FOR 2 VCR ENGINES ONLY	
5	64.12304-5001	FUEL PIPE (PREFILTER PUMP TO FILTER)	1	COMMON FOR 2 VCR ENGINES ONLY	
6	64.12304-5939	FUEL LINE – PRE FILTER TO FEED PUMP	1	COMMON FOR 2 VCR ENGINES ONLY	
7	64.12305-6001	ASSLY INJECTOR OVERFLOW PIPE	1	COMMON FOR 2 VCR ENGINES ONLY	

FUEL SUPPLY PIPES (2 VCR)

Diagram No. 81

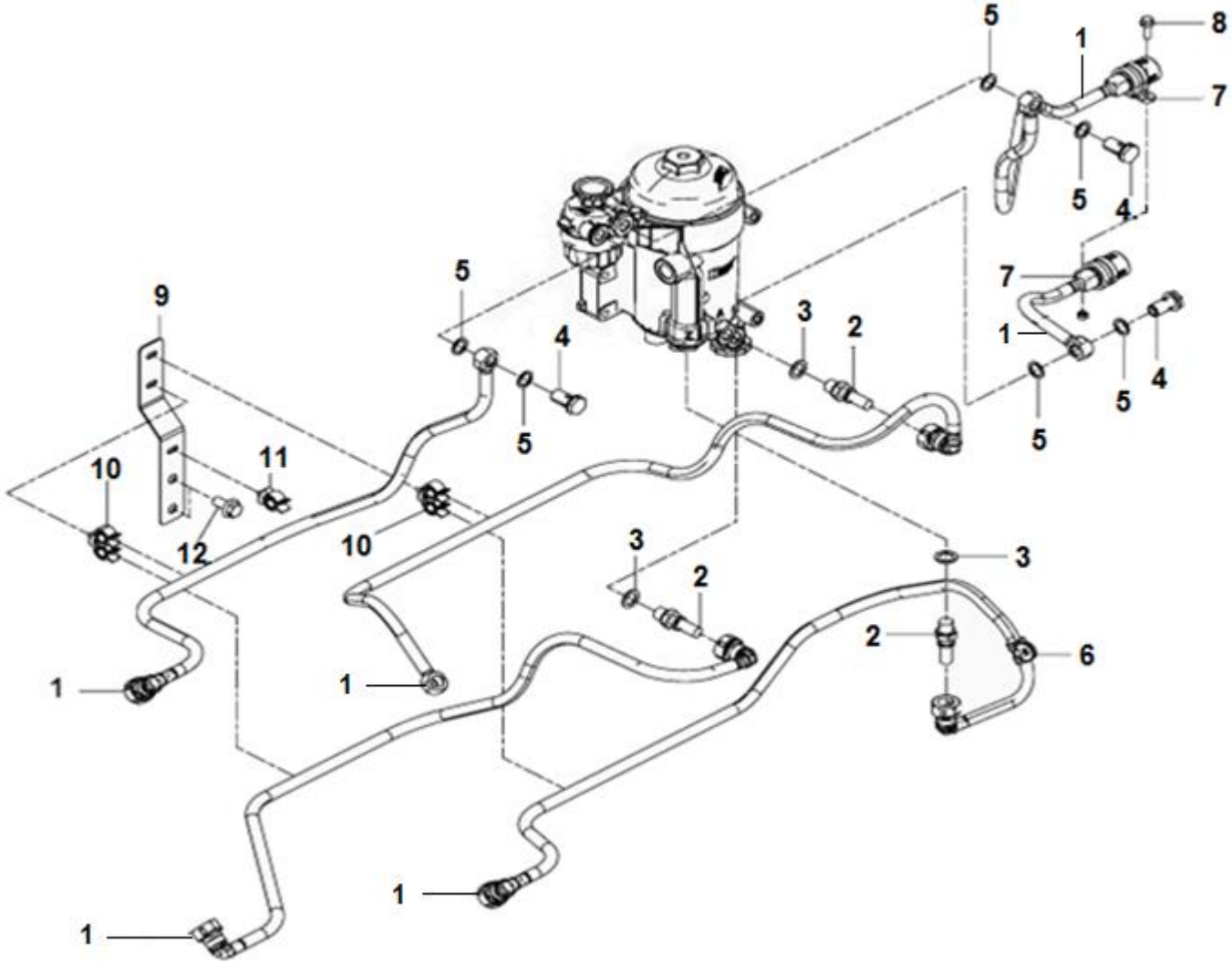

FUEL SUPPLY PIPES (2 VCR) Diagram No. 81

SR	PART NO.	DESCRIPTION	QTY	APPLICABLE MODEL	REMARKS
1	64.12300-6095	FUEL SUPPLY PIPES D0836LFL13	1	COMMON FOR 2 VCR ENGINES ONLY	
2	64.98130-0045	THREADED PIPE CONNECTOR M14X1.5/SAE12	3	COMMON FOR 2 VCR ENGINES ONLY	
3	06.56631-0235	SEALING RING PCS-14,3 X22 –ST/FKM1-80	3	COMMON FOR 2 VCR ENGINES ONLY	
4	64.98150-0004	BANJO BOLT M14X1.5	3	COMMON FOR 2 VCR ENGINES ONLY	
5	06.56190-0706	SEALING RING A14X20-CU	6	COMMON FOR 2 VCR ENGINES ONLY	
6	64.97445-0027	CLAMP D1-12X15-W1-2-CR DIN 3016	1	COMMON FOR 2 VCR ENGINES ONLY	
7	64.97445-0030	CLAMP D1 25X15-W3-CR,DIN 3016	2	COMMON FOR 2 VCR ENGINES ONLY	
8	64.90020-0028	HHS M6X20 DIN 933-8.8 MAN 183-B1	1	COMMON FOR 2 VCR ENGINES ONLY	
9	51.12340-6013	BRACKET FOR FUEL FILTER LINE ON	1	COMMON FOR 2 VCR ENGINES ONLY	
10	64.97401-0018	PIPE HOLDER	2	COMMON FOR 2 VCR ENGINES ONLY	
11	64.97401-0043	SINGLE PIPE CLIP DIA 10-14	1	COMMON FOR 2 VCR ENGINES ONLY	
12	64.90020-0455	BOLT M10X20-10.9 MAN183-B1 DIN 6921	2	COMMON FOR 2 VCR ENGINES ONLY	06.03216-8404 ALTERNATE

DRIP OIL LINE **Diagram No. 82**

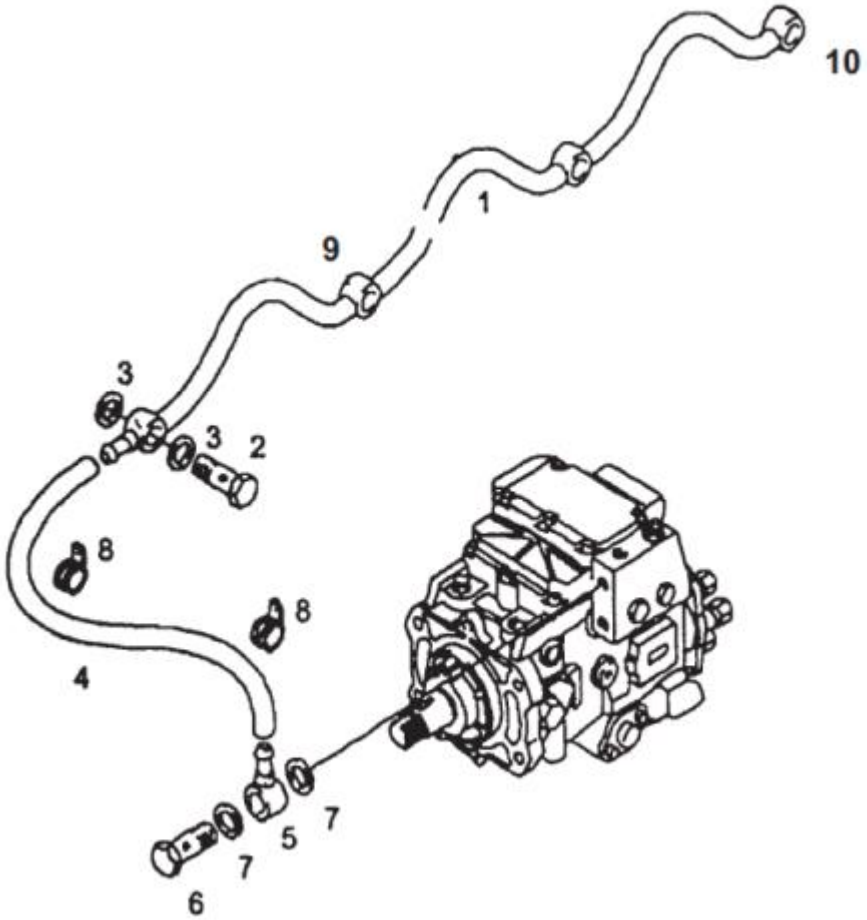

DRIP OIL LINE

Diagram No. 82

SR	PART NO.	DESCRIPTION	QTY	APPLICABLE MODEL	REMARKS
1	64.12305-6006	ASSY.INJECTOR OVERFLOW PIPE	1	FOR 280 HP ENGINES (VP 44) & 220 HP BS II & BS III ENGINES	
2	64.98150-0001	HOLLOW SCREW M6X1	6	FOR ALL ENGINES EXCEPT 280 HP 2VCR ENGINES	
3	06.56631-0231	SEALING RING PCS-6.3 X11 –ST/FKM1-80	12	COMMON FOR ALL MODELS	
4	51.96330-0415	HOSE FPM 4-80 MAN 308 (600MM)	1	FOR ALL ENGINES EXCEPT 280 HP 2VCR ENGINES	
5	64.98103-0002	RING FITTING	1	FOR 280 HP ENGINES WITH VP 44 FIP , 220 HP BS III ENGINES WITH VP 44 FIP & 180 HP ENGINES	
6	64.98150-0012	BANJO BOLT DIN 7643-6-3-11 S MN PB30	1	FOR 280 HP ENGINES WITH VP 44 FIP , 220 HP BS III ENGINES WITH VP 44 FIP & 180 HP ENGINES	SUPERCEDED BY 64.98150-0011
7	06.56631-0104	SEALING WASHER BS-10,7X16,0-ST FPM1-80	2	COMMON FOR ALL MODELS	
8	64.97445-0017	HOSE CLAMP D1-12X15 W1-2 EPDM	2	COMMON FOR ALL MODELS	
9	51.98101-0059	DOUBLE BANJO	5	FOR 280 HP ENGINES (VP 44) & 220 HP BS II & BS III ENGINES	
10	51.98103-0072	BANJO	1	FOR 280 HP ENGINES (VP 44) & 220 HP BS II & BS III ENGINES	
Page No. 82		**REVISION NO. 001**			**VERSION: 001**

FUEL FILTER WITH COMPONENTS

Diagram No. 83

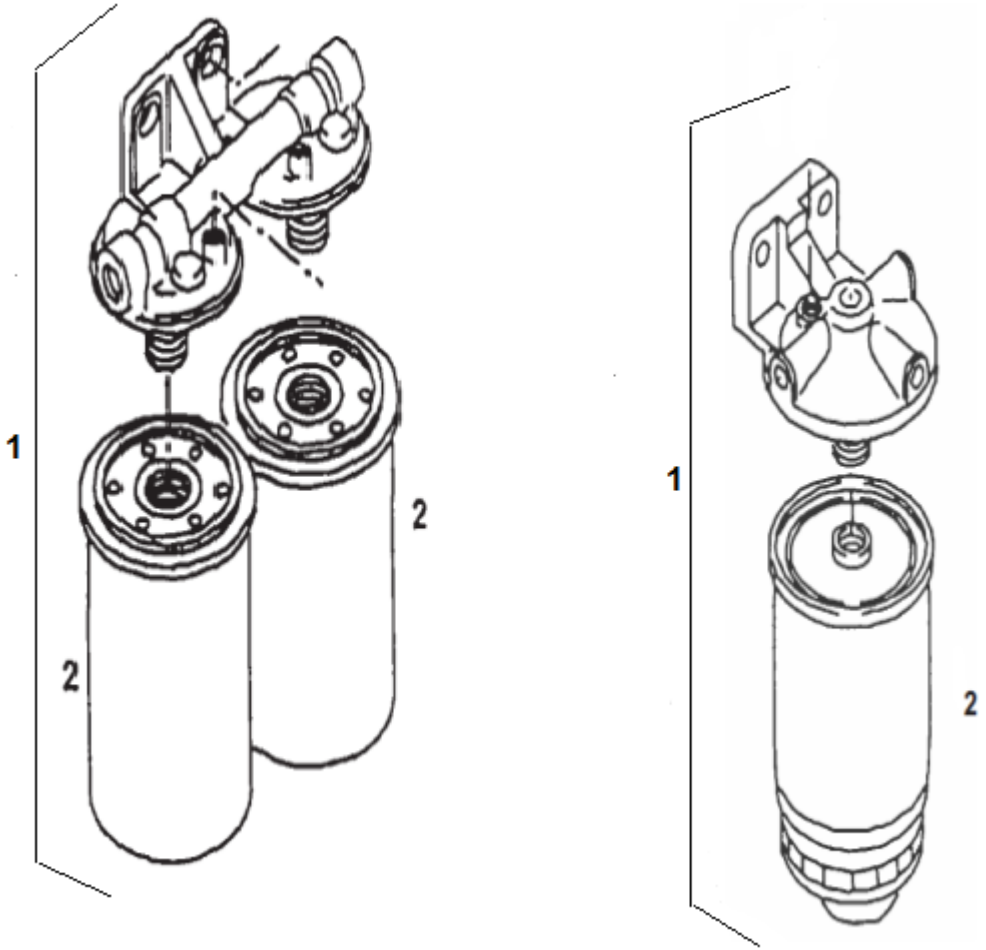

FUEL FILTER WITH COMPONENTS

Diagram No. 83

SR	PART NO.	DESCRIPTION	QTY	APPLICABLE MODEL	REMARKS
1	51.12501-7287	ASSLY FUEL FILTER	1	FOR ALL ENGINES EXCEPT 2 & 4 VCR ENGINES & 180 HP ENGINES	
1	51.12501-7211	ASSLY FUEL FILTER 4CLY.	1	FOR 180 HP ENGINES ONLY	
2	51.12503-0072	EXPANDABLE FUEL FILTER RME RESISTANT DRAIN VALVE	2	FOR ALL ENGINES EXCEPT 2 & 4 VCR ENGINES & 180 HP ENGINES	ONLY QTY DIFF FOR 6 CYLINDER & 4 CYLINDER ENGINES

RPM SENSOR & MOUNTING **Diagram No. 84**

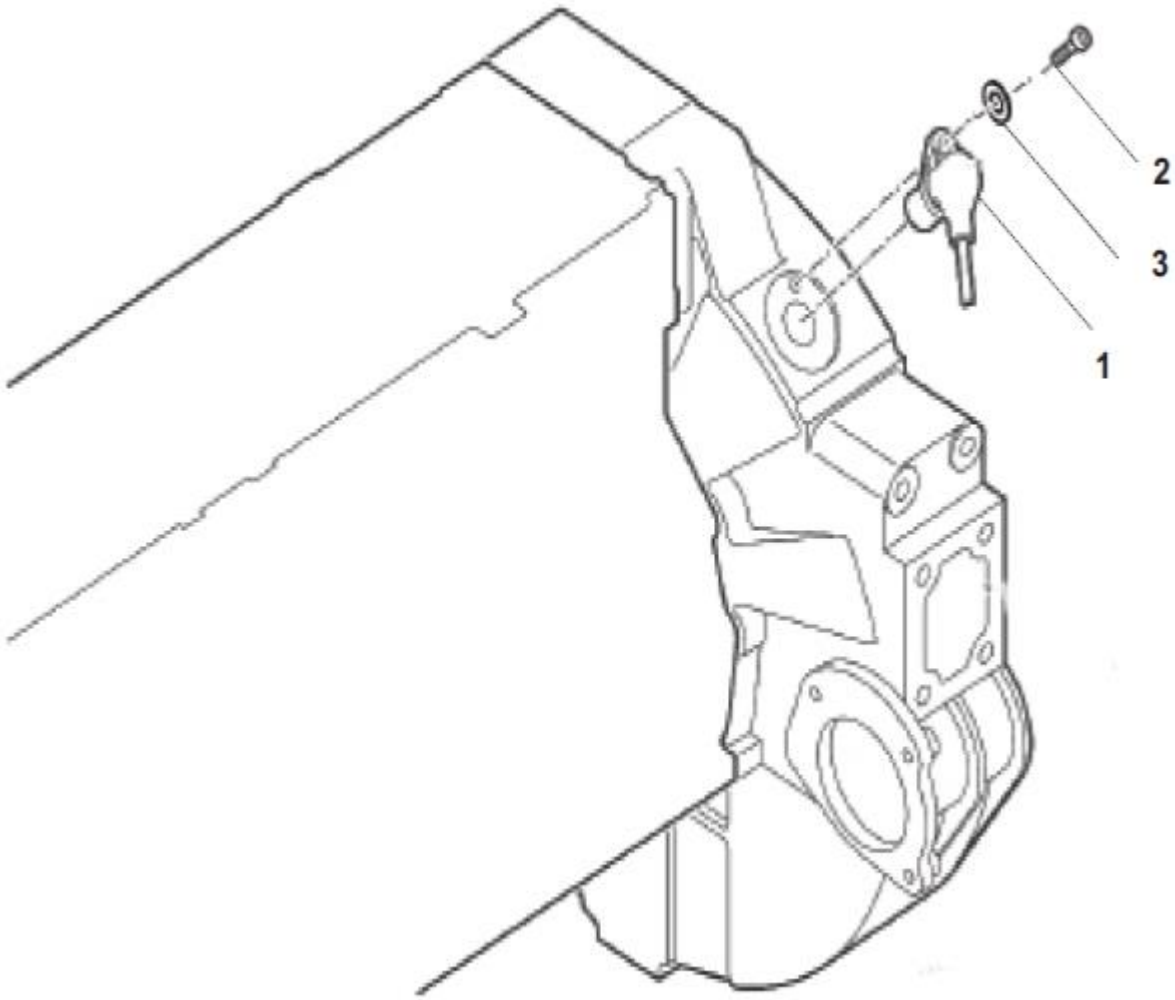

RPM SENSOR & MOUNTING

Diagram No. 84

SR	PART NO.	DESCRIPTION	QTY	APPLICABLE MODEL	REMARKS
1	51.27120-0014	RPM SENSOR	1	COMMON FOR 2 VCR ENGINES ONLY	VALID FOR VIN UPTO : 16160
1	51.27120-7038	CAM SHAFT PHASE SENSOR		COMMON FOR 2 VCR ENGINES ONLY	VALID FROM VIN :16160
-	64.90710-0519	SPACER FOR CRANKSHAFT SPEEDSENSOR	1	COMMON FOR 2 VCR ENGINES ONLY	VALID FROM VIN :16160
-	64.90020-0179	HEX SCREW M6X25SC-8.8 MAN183 A2R DIN933	1	COMMON FOR 2 VCR ENGINES ONLY	VALID FROM VIN :16160
-	64.90710-0074	WASHER A6.4X12X1.6-200HV MAN183B1 DIN125	2	COMMON FOR 2 VCR ENGINES ONLY	VALID FROM VIN :16160
1	51.27120-0008	RPM SENSOR	1	FOR 280 HP ENGINES WITH VP 44 FIP , 220 HP BS III ENGINES WITH VP 44 FIP & 180 HP ENGINES ONLY	
2	64.90020-0087	HHS M6 X16 DIN 933-8.8	1	COMMON FOR ALL MODELS UPTO VIN : 16160	
3	64.90710-0025	PL WASHER A6.4 DIN125-ST	1	COMMON FOR ALL MODELS.	

FUEL LINES WITH HAND PRIMER FUEL FILTER

Diagram No. 85

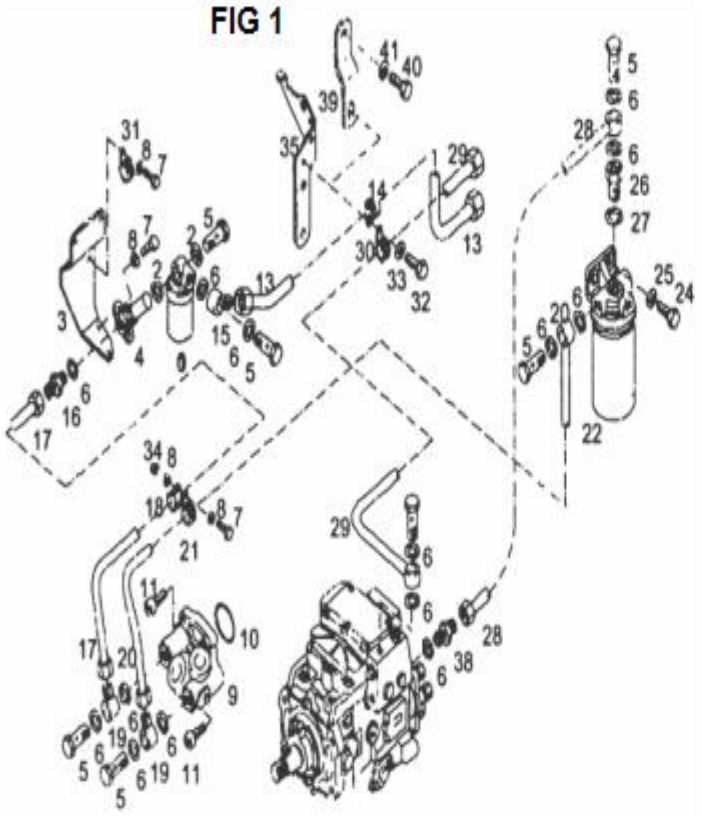

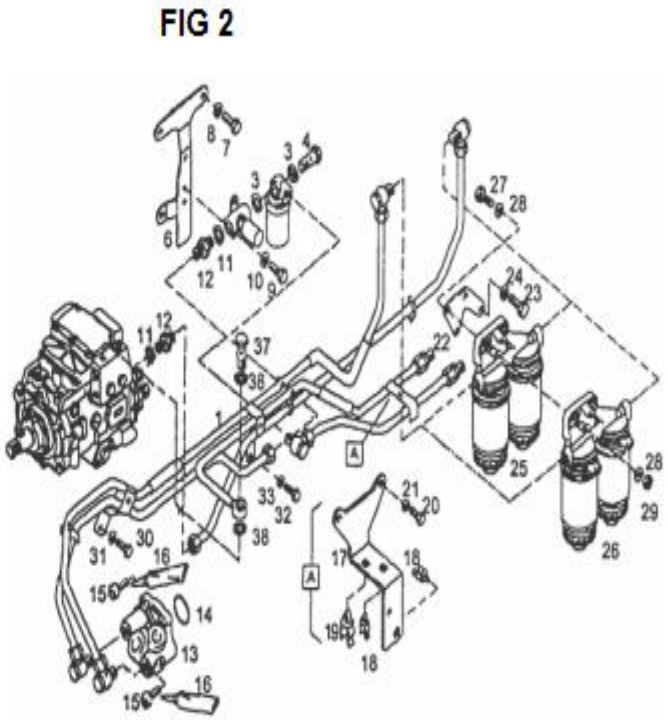

FUEL LINES WITH HAND PRIMER FUEL FILTER

Diagram No. 85

SR	PART NO.	DESCRIPTION	QTY	APPLICABLE MODEL	REMARKS
1	64.12300-6001	FUEL SUPPLY PIPES	1	COMMON FOR MODELS WITH 280 HP & 220 HP BS III ENGINES WITH VP 44 FIP.	REFER FIG. 2
2	51.12150-7026	FUEL PRE-FILTER WITH HAND PRIMER	1	COMMON FOR ALL MODELS EXCEPT MODELS WITH 280 HP 2VCR ENGINES	REFER FIG. 1
3	06.56631-0106	SEALING RING BS-14,7X22,O-ST TPMI-80	1	COMMON FOR ALL MODELS	REFER FIG.2
3	64.12140-0002	BRACKET FOR LIFT PUMP	1	COMMON FOR MODELS WITH 180 HP ENGINES ONLY	REFER FIG. 1
4	64.98150-0012	BANJO BOLT DIN 7643-6-3-11 S MN PB30	2	COMMON FOR MODELS WITH 280 HP ENGINES WITH VP 44 FIP , 220 HP BS III ENGINES WITH VP 44 FIP & 180 HP ENGINES ONLY	SUPERCEDED BY 64.98150-0011
5	64.98150-0004	HOLLOW SCREW	1	COMMON FOR ALL MODELS EXCEPT MODELS WITH BS II & 220 HP ENGINES WITH VE 6 BS III FIP	
6	64.96501-0047	SEAL WITH ELASTOMER LIP 14.7 X 22 X 1.5	14	COMMON FOR ALL MODELS EXCEPT 2 VCR	REFER FIG.1
6	64.12140-5001	HOLDER FOR HAND PUMP	1	COMMON FOR MODELS 280 HP ENGINES (VP 44) & MODELS WITH 220 HP BS II & BS III ENGINES	REFER FIG.2
7	64.90020-0103	HHS M10 X 25	2	COMMON FOR MODELS WITH 180 HP ENGINES ONLY	REFER FIG. 1
7	64.90020-0254	HHS M8 X 22 DIN 933 – 8.8 BTS 170202.22	3	COMMON FOR MODELS 280 HP ENGINES WITH VP 44 FIP & MODELS WITH 220 HP BS II & BS III ENGINES	REFER FIG. 2
8	64.90710-0026	PL WASHER A8.4 DIN125-ST BTS170202.12	3	COMMON FOR ALL MODELS	
8	64.90710-0027	WASHER A6,4X12X1	1	COMMON FOR ALL MODELS	
-	64.90030-0033	HEX SCREW M8X30-10.9 DIN6921 MAN183-B1	1	COMMON FOR MODELS 280 HP ENGINES (VP 44) & MODELS WITH 220 HP BS II & BS III ENGINES	

9	64.90020-0088	HHS M6X20 DIN 933-8.8 BTS:170202.22	2	COMMON FOR ALL MODELS	
10	64.90710-0025	PL WASHER A6.4 DIN125-ST BTS170202.12	2	COMMON FOR ALL MODELS	
11	06.56631-0106	SEALING RING BS-14,7X22,O-ST TPMI-80	2	COMMON FOR ALL MODELS`	
12	06.78170-0555	ADAPTER WITH SEAL	2		
13	64.12101-7001	FEED PUMP	1	COMMON FOR ALL MODELS EXCEPT MODELS WITH 280 HP 2 & 4 VCR ENGINES	
15	64.90020-0208	CYLINDRICAL SCREW M6X45-8.8 A2C DIN 912	2	COMMON FOR ALL MODELS EXCEPT MODELS WITH 280 HP 2 & 4 VCR ENGINES	
17	64.12340-0002	SUPPORT BKT FOR FUEL PIPES	1	COMMON FOR MODELS 280 HP ENGINES (VP 44) & MODELS WITH 220 HP BS II & BS III ENGINES	
18	64.97430-0002	SUPPORT FOR TUBE DN13	2	COMMON FOR ALL MODELS	
20	64.90020-0145	HEX SCREW M6X25-8.8 MAN183 A2C DIN 933	2	COMMON FOR MODELS 280 HP ENGINES (VP 44) & MODELS WITH 220 HP BS II & BS III ENGINES	
21	64.90710-0025	PL WASHER A6.4 DIN125-ST BTS170202.12	2	COMMON FOR ALL MODELS	
22	64.12540-0001	HOLDER FOR FUEL FILTER	1	COMMON FOR MODELS 280 HP ENGINES (VP 44) & MODELS WITH 220 HP BS II & BS III ENGINES	REFER FIG 2
23	64.90020-0160	HEX SCREW M10X28-8.8 MAN183 PHR DIN 933	1	COMMON FOR MODELS 280 HP ENGINES (VP 44) & MODELS WITH 220 HP BS II & BS III ENGINES	
24	64.90710-0027	PL WASHER A10.5 DIN125-ST BTS170202.12	1	COMMON FOR ALL MODELS	
27	64.90020-0161	HEX SCREW M10X35-8.8 MAN183 PHR DIN 933	2	COMMON FOR ALL MODELS	
28	64.90710-0027	PL WASHER A10.5 DIN125-ST BTS170202.12	4	COMMON FOR ALL MODELS	

FUEL LINES WITH HAND PRIMER FUEL FILTER

Diagram No. 85

SR	PART NO.	DESCRIPTION	QTY	APPLICABLE MODEL	REMARKS
29	64.90501-0048	HEX NUT M10-8-A3C DIN 934	2	COMMON FOR ALL MODELS	SUPERCEDED BY 06.11240-0406
30	64.90020-0092	HHS M8X16 DIN 933-8.8 BTS:170102.20	1	COMMON FOR ALL MODELS	
31	64.90710-0026	PL WASHER A8.4 DIN125-ST BTS170202.12	1	COMMON FOR ALL MODELS	
32	64.90020-0145	HEX SCREW M6X25-8.8 MAN183 A2C DIN 933	2	COMMON FOR MODELS WITH 280 HP ENGINES (VP 44) & MODELS WITH 220 HP BS II & BS III ENGINES	
33	64.90710-0025	PL WASHER A6.4 DIN125-ST BTS170202.12	2	COMMON FOR ALL MODELS	
37	64.98150-0004	BANJO BOLT M14X1.5	1	COMMON FOR ALL MODELS	
38	06.56631-0106	SEALING RING BS-14,7X22,O-ST TPMI-80	2	COMMON FOR ALL MODELS	

BRACKET FOR LOOM **Diagram No. 86**

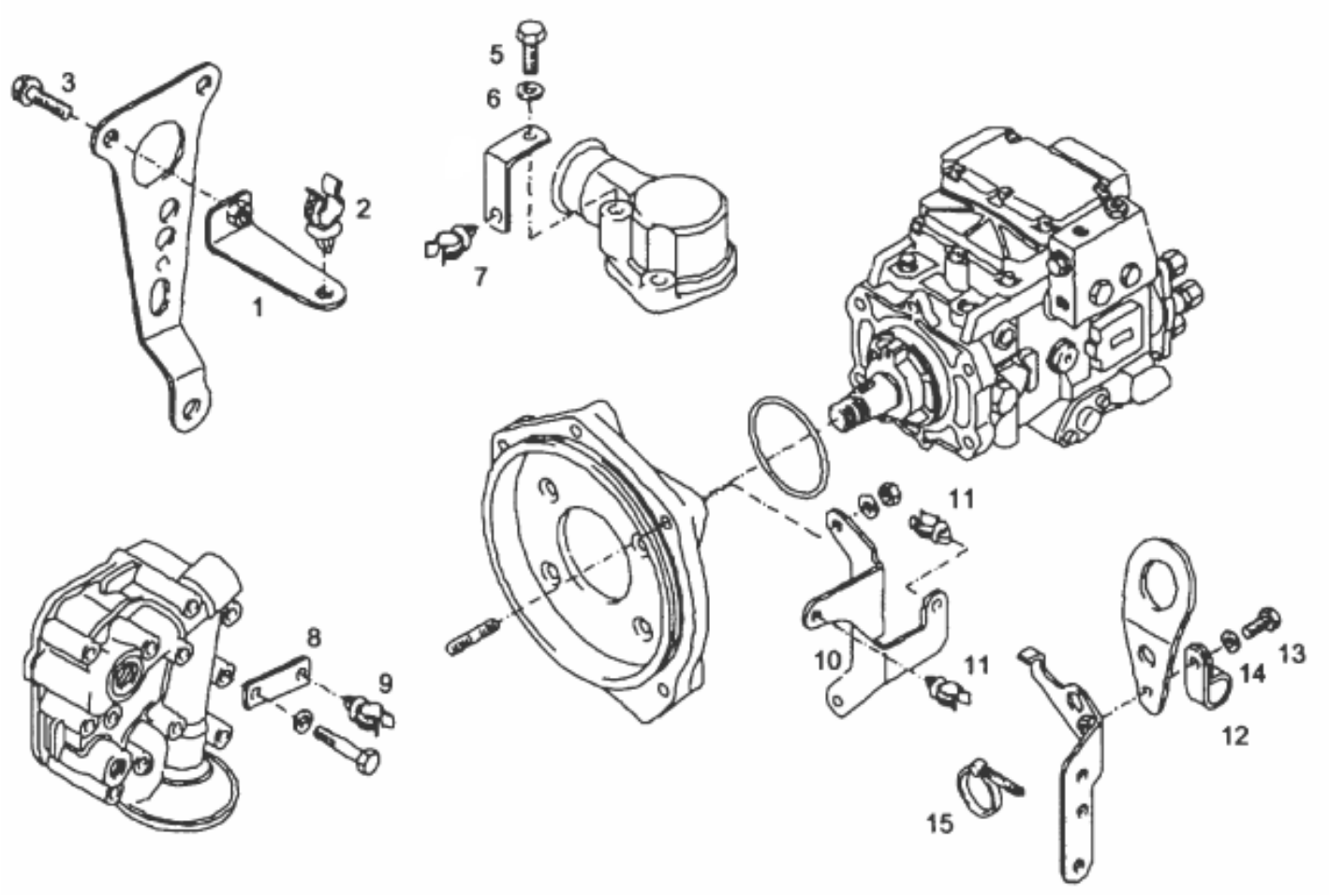

BRACKET FOR LOOM

Diagram No. 86

SR	PART NO.	DESCRIPTION	QTY	APPLICABLE MODEL	REMARKS
1	64.25441-6007	HOLDER FOR CABLE HARNESS	1	COMMON FOR MODELS WITH 180 HP ENGINES ONLY	
2	64.97430-0004	SUPPORT FOR TUBE DN22	1	COMMON FOR ALL MODELS	
3	64.90030-0020	HEX. ROUND BOLT	1	COMMON FOR MODELS WITH 180 HP ENGINES ONLY	
5	64.90020-0093	HHS M8 X 20	1	COMMON FOR ALL MODELS	
6	64.90710-0026	WASHER A8.4 X 16X 1.6	1	COMMON FOR ALL MODELS	
7	64.97430-0006	SUPPORT FOR TUBE DN8.5	1	COMMON FOR ALL MODELS EXCEPT MODELS WITH 280 HP 2VCR ENGINES	
8	64.97480-0004	HOLDER	1	COMMON FOR MODELS WITH 180 HP ENGINES ONLY	
9	64.97430-0001	SUPPORT FOR TUBE DN13	1	COMMON FOR ALL MODELS EXCEPT MODELS WITH 280 HP 2VCR ENGINES	
10	64.25441-6009	BRACKET	1	COMMON FOR MODELS WITH 180 HP ENGINES ONLY	
11	64.97430-0002	TUBE BRACKET	2	COMMON FOR ALL MODELS	
12	64.97201-0010	MOUNTING CLAMP	1	COMMON FOR ALL MODELS EXCEPT MODELS WITH 280 HP 2VCR ENGINES	
13	64.90020-0142	HHS M16 X 12	1	COMMON FOR ALL MODELS EXCEPT MODELS WITH 280 HP 2VCR ENGINES	
14	64.90710-0025	WASHER A6.4 X 12 X 1.6	1	COMMON FOR ALL MODELS	
15	64.97401-0008	CABLE BINDER	9	COMMON FOR ALL MODELS	

HAND PRIMER WITH PRE-FILTER **Diagram No. 87**

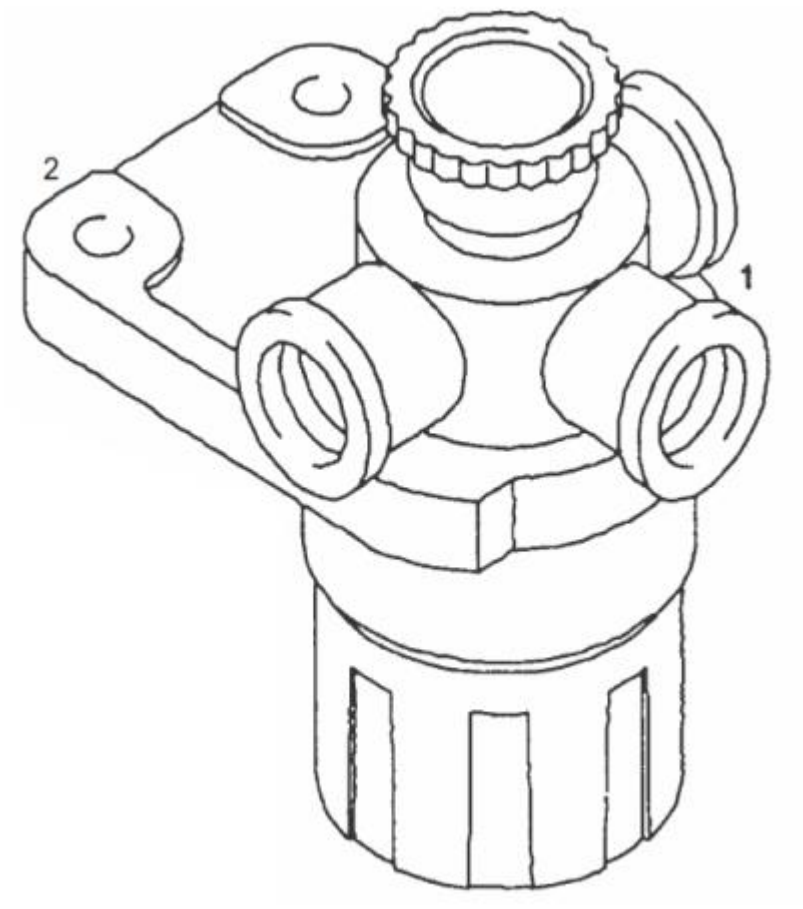

HAND PRIMER WITH PRE-FILTER

Diagram No. 87

SR	PART NO.	DESCRIPTION	QTY	APPLICABLE MODEL	REMARKS
1	51.12150-7026	HAND PUMP	1	COMMON FOR ALL MODELS EXCEPT MODELS WITH 2 & 4 VCR ENGINES	
2	64.12140-5001	HOLDER FOR HAND PUMP	1	COMMON FOR MODELS 280 HP ENGINES (VP 44) & MODELS WITH 220 HP BS II & BS III ENGINES	
-	64.90020-0254	HHS M8 X 22 DIN 933 – 8.8 BTS 170202.22	3	COMMON FOR MODELS 280 HP ENGINES (VP 44) & MODELS WITH 220 HP BS II & BS III ENGINES	

EXHAUST ELBOW **Diagram No. 88**

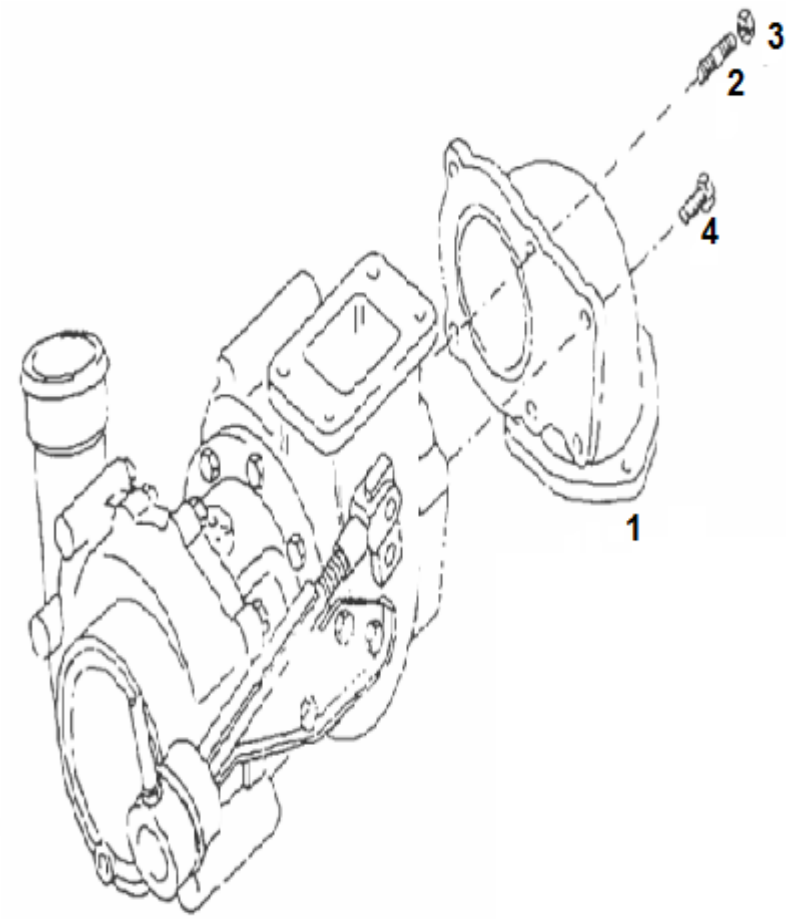

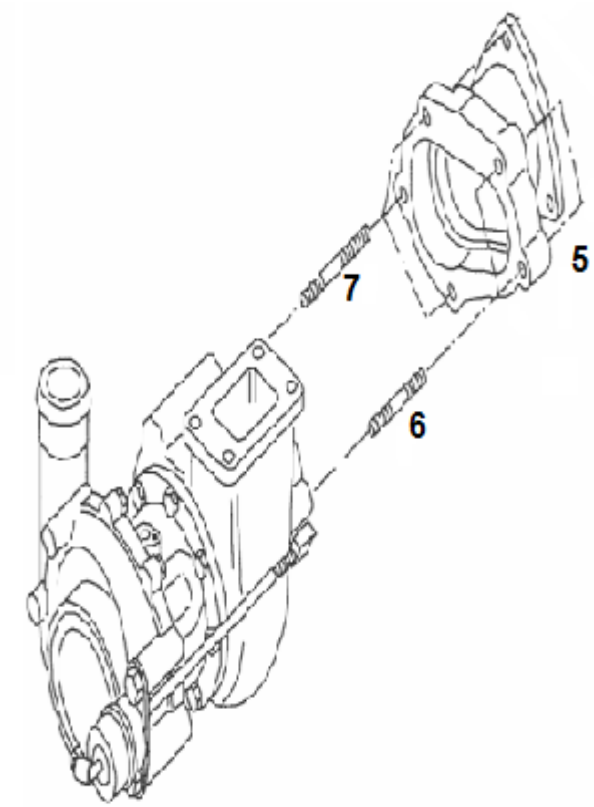

EXHAUST ELBOW

Diagram No. 88

SR	PART NO.	DESCRIPTION	QTY	APPLICABLE MODEL	REMARKS
1	64.15201-0001	EXHAUST OUTLET FLANGE	1	COMMON FOR 280 HP ENGINES (VP 44 & 2VCR), 220 HP BS III ENGINE WITH VP 44 FIP & ALL BS II MODELS ONLY	
1	64.15201-0002	EXHAUST OUTLET FLANGE M/CED	1	COMMON FOR 220 HP BS III ENGINES WITH VE6 FIP & 230 HP 2 VCR ENGINES ONLY	
2	51.90201-0080	STUD M10X40	4	COMMON FOR ALL ENGINES EXCEPT 180 HP ENGINES	
3	64.90501-0060	HEX NUT AM10-10-A3C M7.112.60	4	COMMON FOR ALL ENGINES EXCEPT 180 HP ENGINES	
4	06.01289-0304	HEX SCREW M10X30-GA-C3J DIN 933	2	COMMON FOR ALL ENGINES EXCEPT 180 HP ENGINES	
5	64.08103-0002	OUTLET FLANGE MACHINING	1	COMMON FOR 180 HP ENGINES ONLY	
6	51.90001-0202	SCREW M8 X40	1	COMMON FOR 180 HP ENGINES ONLY	
7	51.90001-0210	HEX BOLT	2	COMMON FOR 180 HP ENGINES ONLY	

BRACKET FOR LOOM ON WATER PUMP

Diagram No.89

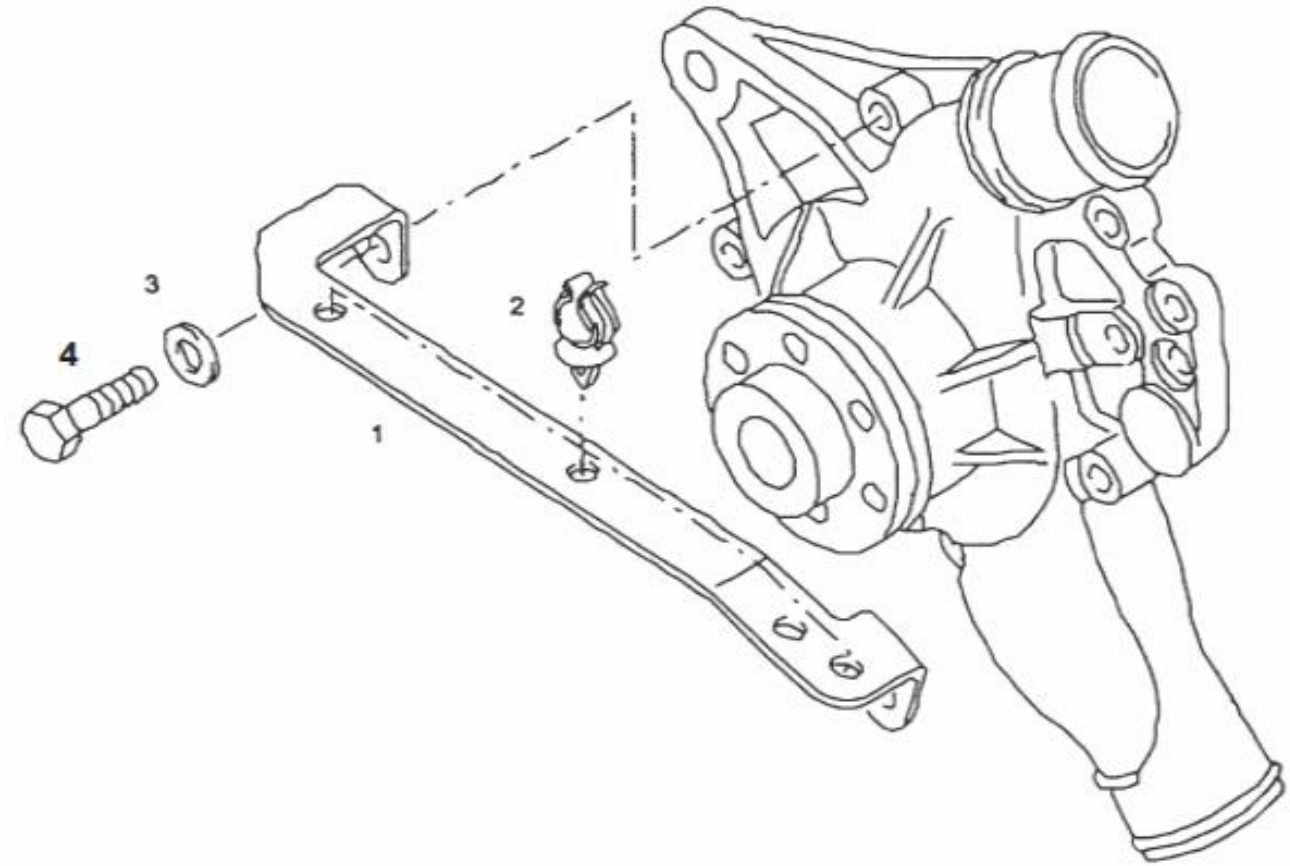

BRACKET FOR LOOM ON WATER PUMP

Diagram No.89

SR	PART NO.	DESCRIPTION	QTY	APPLICABLE MODEL	REMARKS
1	64.25441-6008	HOLDER FOR CABLE HARNESS	1	COMMON FOR MODELS WITH 180 HP ENGINES ONLY	
2	64.97430-0002	SUPPORT FOR TUBE DN13	3	COMMON FOR ALL MODELS	
3	64.90710-0026	PLAIN WASHER A8.4	1	COMMON FOR ALL MODELS	
4	64.90020-0093	HEX HEAD SCREW M8X20	1	COMMON FOR ALL MODELS	

ENGINE SUPPORT FRONT AND PLATE

Diagram No. 90

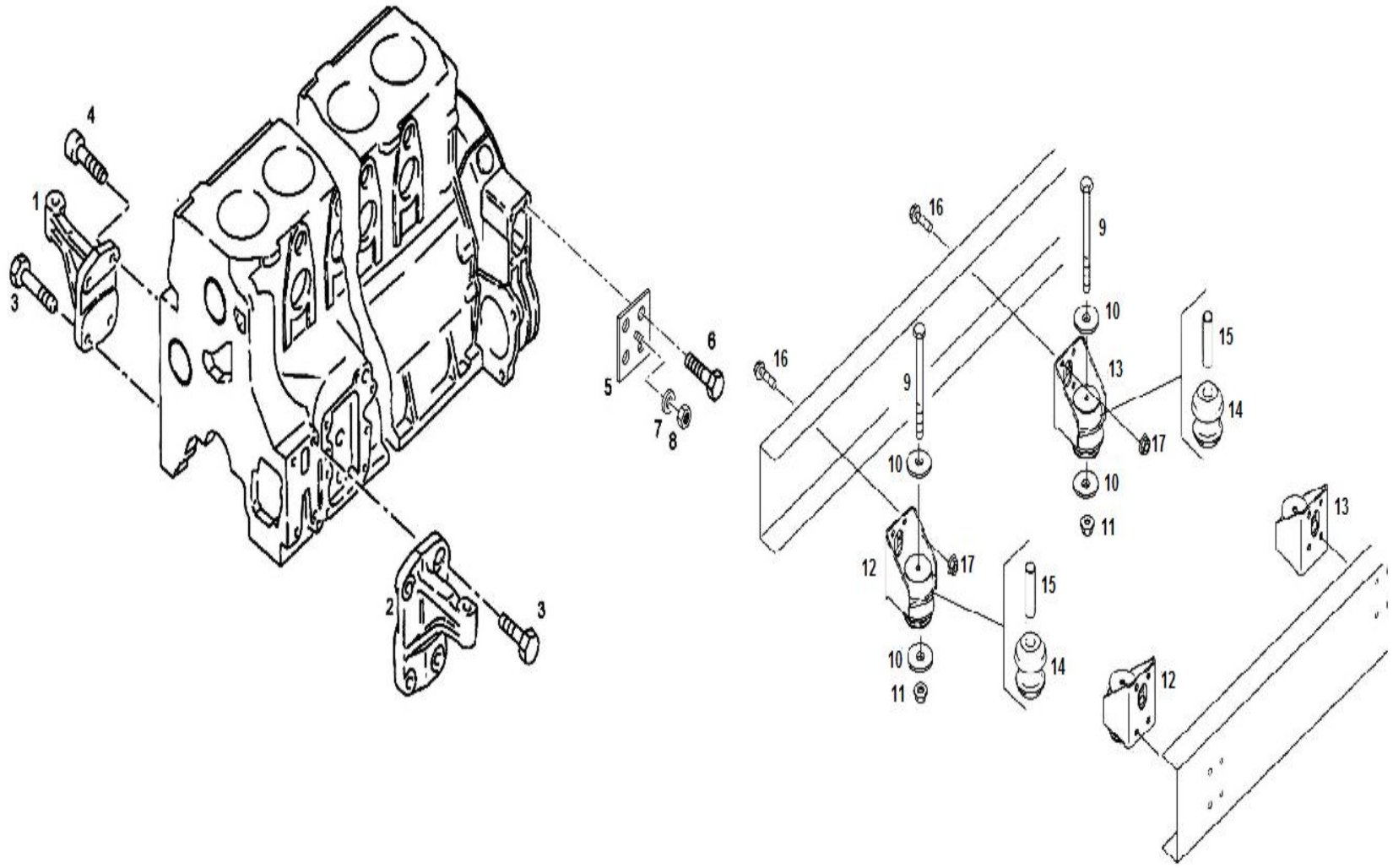

ENGINE SUPPORT FRONT AND PLATE

Diagram No. 90

SR	PART NO.	DESCRIPTION	QTY	APPLICABLE MODEL	REMARKS
1	64.19210-0003	ENGINE MTG BRACKET (FRONT) EXHAUST SIDE	1	COMMON FOR ALL MODELS	
2	64.19210-0002	ENGINE MTG BRACKET (FRONT) INLET SIDE	1	COMMON FOR ALL MODELS	
3	64.90020-0212	HEX SCREW M12X30-100MAN183-PHR	7	COMMON FOR ALL MODELS	
4	64.90030-0028	SCREW M12X30-10.9-MAN183-PHR DIN 912	1	COMMON FOR ALL MODELS	
5	64.19240-5001	ASSY EARTHING PLATE FOR SAE-1 HSG	1	COMMON FOR ALL MODELS EXCEPT MODELS WITH 180 HP ENGINES	
6	64.90001-0001	HHB M16X1.5X40 DIN 933-8.8 A3C	5	COMMON FOR ALL MODELS EXCEPT MODELS WITH 180 HP ENGINES	
7	64.90710-0027	PL WASHER A10.5 DIN125-ST BTS170202.12	1	COMMON FOR ALL MODELS	
8	64.90501-0038	HEX NUT M10X1.5-8	1	COMMON FOR ALL MODELS	
9	64.90020-0101	BOLT M12X1.5X175-10.9, JIS B1189 – PHR	4	COMMON FOR ALL MODELS	
10	64.94299-0005	SPACER (POWER PACK MTG)	4	COMMON FOR ALL MODELS	
11	64.90501-0023	NUT AM12X1.5-10, M7.112.60 , A3C	8	COMMON FOR ALL MODELS	
12	64.41506-6001	ENGINE MTG BKT SUB ASSY	2	COMMON FOR ALL MODELS	CONSIST OF SR 12A, 14 & 15
12A	64.41506-5001	ENGINE MTG BKT ASSY	2	COMMON FOR ALL MODELS	
13	64.41506-6003	GEAR BOX MTG BKT SUB ASSY	2	COMMON FOR TIPPER, RMC MODELS & 16.280 SPL APP, 49.300 TR, 25.180 HL & 25.220 HL MODELS. NOT USED IN MODELS WITH EATON GEAR BOX	CONSIST OF SR 13A, 14 & 15
13A	64.41506-5004	GEAR BOX MTG BKT ASSY	2	COMMON FOR TIPPER, RMC MODELS & 16.280 SPL APP, 49.300 TR, 25.180 HL & 25.220 HL MODELS. NOT USED IN MODELS WITH EATON GEAR BOX	

13	64.41506-6002	GEAR BOX MTG BKT SUB ASSY	2	COMMON FOR 49.280, 40.280, 40.220 & BUS.NOT USED IN MODELS WITH EATON GEAR BOX.	CONSIST OF SR 13B, 14 & 15
13B	64.41506-5002	GEAR BOX MTG BKT ASSY	2	COMMON FOR 49.280, 40.280, 40.220 & BUS.NOT USED IN MODELS WITH EATON GEAR BOX.	
13	64.41506-6014	GEAR BOX MTG BKT ASSY (EATON 6S GB)-8X2	2	COMMON FOR 31.220 & 31.230 HL WITH EATON 6S GEARBOX ONLY	CONSIST OF SR 13C, 14 & 15
13C	64.41506-5014	GEAR BOX MTG BKT (EATON 6S GB)-8X2	2	COMMON FOR 31.220 & 31.230 HL WITH EATON 6S GEARBOX ONLY	
13	64.41506-6013	GEAR BOX MTG BKT ASSY (EATON 6S GB)-4X2	2	COMMON FOR 25.220 TP (DS47) & 16.220 TP (DS49) WITH EATON 6S GEARBOX ONLY	CONSIST OF SR 13D, 14 & 15
13D	64.41506-5013	GEAR BOX MTG BKT (EATON 6S GB)- 4X2	2	COMMON FOR 25.220 TP (DS47) & 16.220 TP (DS49) WITH EATON 6S GEARBOX ONLY	
14	64.96020-0003	GEAR BOX MTG RUBBER BUFFER	4	COMMON FOR ALL MODELS EXCEPT 4 VCR ENGINES	
15	64.94299-0006	MTG SPACER (POWER PACK)	4	COMMON FOR ALL MODELS	
16	64.90020-0014	SCREW M12X1.5X35-10.9, M701204-MAN183B1	4	COMMON FOR ALL MODELS	
17	64.90501-0012	NUT M12X1.5-10 , M7.112.40-MAN183B1	4	COMMON FOR ALL MODELS	

GEARBOX SUPPORT

Diagram No. 91

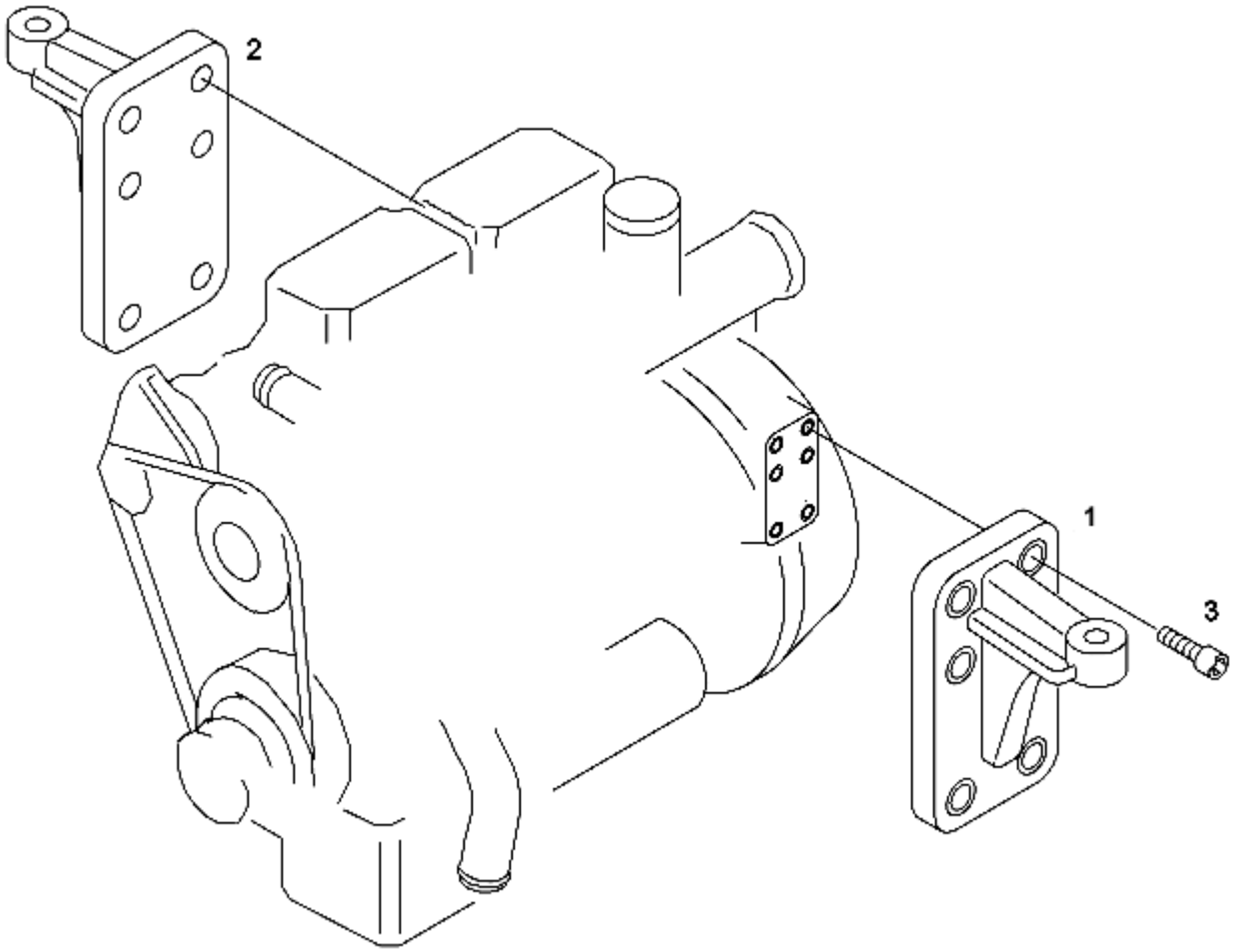

GEARBOX SUPPORT

Diagram No. 91

SR	PART NO.	DESCRIPTION	QTY	APPLICABLE MODEL	REMARKS
1	64.41307-0004	GEAR BOX MTG BKT LH	1	COMMON FOR MODELS WITH ZF 9S GEAR BOX.	
1	64.41307-0020	GEAR BOX MTG BKT LH MACHINING	1	COMMON FOR MODELS WITH ZF 6S GEAR BOX ONLY.	
1	64.41307-0049	GEAR BOX MTG BKT LH MACHINING	1	COMMON FOR MODELS WITH EATON 6S GEAR BOX ONLY.	
2	64.41307-0005	GEAR BOX MOUNTING BKT- RH (MACHINING)	1	COMMON FOR MODELS WITH ZF 9S GEAR BOX.	
2	64.41307-0021	GEAR BOX MTG BKT RH MACHINING	1	COMMON FOR MODELS WITH ZF 6S GEAR BOX ONLY.	
2	64.41307-0050	GEAR BOX MTG BKT RH MACHINING	1	COMMON FOR MODELS WITH EATON 6S GEAR BOX ONLY.	
3	64.90490-0005	BOLT M16X2X40 DIN912-10.9 A3C	12	COMMON FOR MODELS WITH ZF 9S GEAR BOX.	
3	64.90020-0006	SCREW M14X1.5X40-10.9, M701204 –MAN183B1	8	COMMON FOR MODELS WITH ZF 6S GEAR BOX ONLY.	
3	64.90030-0028	SCREW M12X30-10.9-MAN183-PHR DIN 912	8	COMMON FOR MODELS WITH EATON 6S GEAR BOX ONLY.	

LIFTING EYE LATERAL FRONT

Diagram No. 92

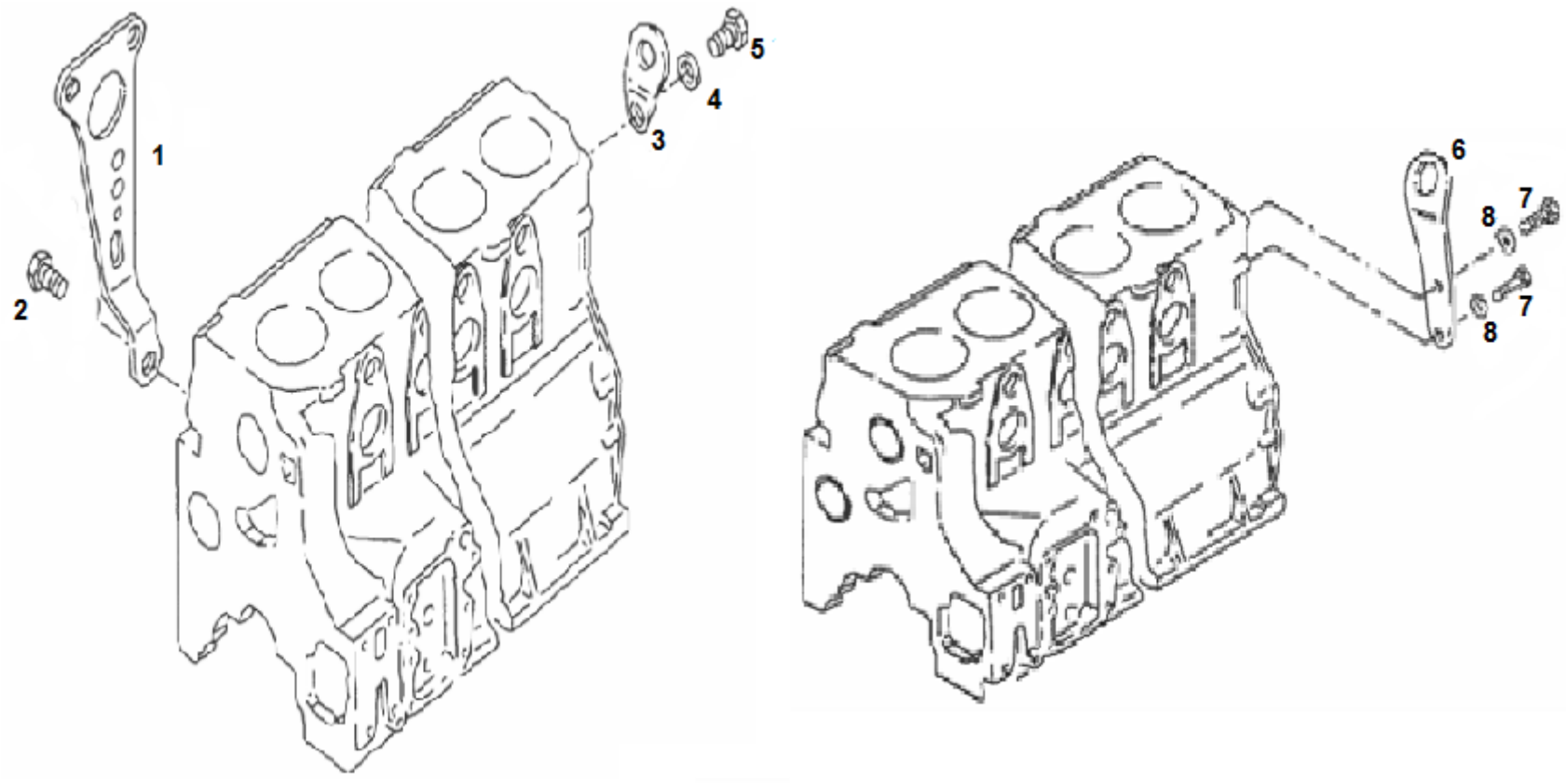

LIFTING EYE LATERAL FRONT

Diagram No. 92

SR	PART NO.	DESCRIPTION	QTY	APPLICABLE MODEL	REMARKS
1	64.92020-0001	ASSY ENGINE LIFTING BKT FRONT	1	COMMON FOR ALL MODELS EXCEPT MODELS WITH 280 HP 2VCR ENGINES	
1	64.19210-5007	ASSY ENGINE LIFTING BKT FRONT	1	COMMON FOR MODELS WITH 2 VCR ENGINES ONLY	
2	64.90020-0168	HEX SCREW M14X25-8.8 MAN183	1	COMMON FOR ALL MODELS	
3	64.19202-0001	LIFTING HOOK REAR	1	COMMON FOR MODELS WITH 180 HP ENGINES ONLY	
4	64.90710-0035	WASHER A15-200HV-A3C DIN 125	1	COMMON FOR MODELS WITH 180 HP ENGINES ONLY	
5	64.90020-0169	HEX SCREW M14X30-8.8 MAN183	1	FOR 220 HP BS II & BS III ENGINES (VP 44 & VE 6 FIP) & 31.230 HL DS 48	
6	64.19210-0001	ENGINE LIFTING BKT FOR SAE1 F/W HOUSING	1	COMMON FOR ALL MODELS EXCEPT MODELS WITH 220 HP BS II & BS III ENGINES (VP 44 & VE 6 FIP) & 31.230 HL DS 48	
6	64.19202-0002	LIFTING BRACKET REAR	1	FOR 220 HP BS II & BS III ENGINES (VP 44 & VE 6 FIP) & 31.230 HL DS 48	
7	64.90020-0125	SCREW M16X45 DIN:933-10.9 PHR	2	COMMON FOR ALL MODELS EXCEPT MODELS WITH 220 HP BS II & BS III ENGINES (VP 44 & VE 6 FIP) & 31.230 HL DS 48	
8	64.90710-0030	PLAIN WASHER A17 DIN125-ST A3C	4	COMMON FOR ALL MODELS EXCEPT MODELS WITH 180 HP ENGINES	

BRACKET FOR CABLE HARNESS **Diagram No. 93**

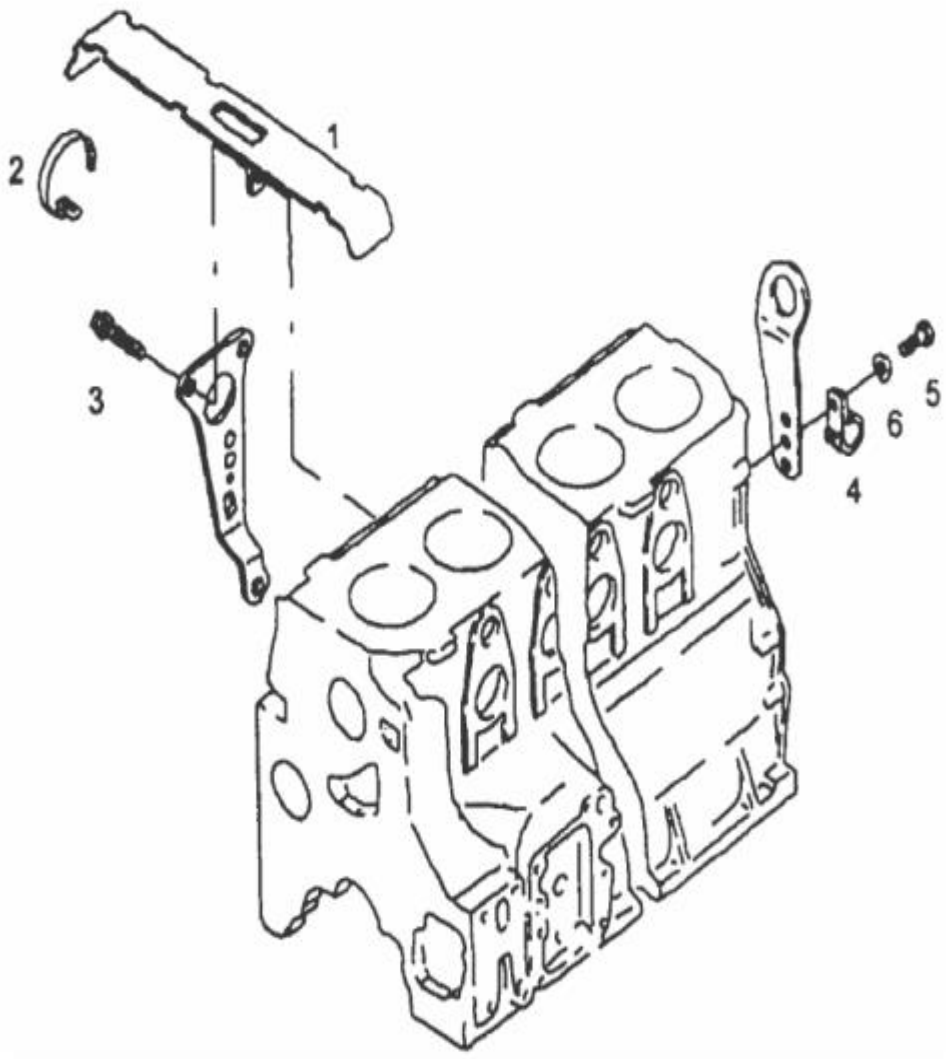

BRACKET FOR CABLE HARNESS

Diagram No. 93

SR	PART NO.	DESCRIPTION	QTY	APPLICABLE MODEL	REMARKS
1	64.25441-5008	HOLDER FOR CABLE HARNESS	2	COMMON FOR ALL MODELS EXCEPT MODELS WITH 2 & 4 VCR ENGINES & 180 HP ENGINES	
2	64.97401-0008	CABLE CLAMP 4.8X166	5	COMMON FOR ALL MODELS EXCEPT MODELS WITH 2 & 4 VCR ENGINES & 180 HP ENGINES	
3	64.90030-0020	SCREW BM10X25-10.9 MAN183	1	COMMON FOR ALL MODELS EXCEPT MODELS WITH 2 & 4 VCR ENGINES & 180 HP ENGINES	
4	64.97201-0010	CLAMP A-13 MAN 194	2	COMMON FOR ALL MODELS EXCEPT MODELS WITH 2 & 4 VCR ENGINES & 180 HP ENGINES	
5	64.90020-0142	HEX SCREW 8M6X12-.8 MAN183	1	COMMON FOR ALL MODELS EXCEPT MODELS WITH 2 & 4 VCR ENGINES & 180 HP ENGINES	
6	64.90710-0025	PL WASHER A6.4 DIN125-ST	1	COMMON FOR ALL MODELS EXCEPT MODELS WITH 2 & 4 VCR ENGINES & 180 HP ENGINES	

BRACKET FOR LOOM ON ALTERNATOR **Diagram No. 94**

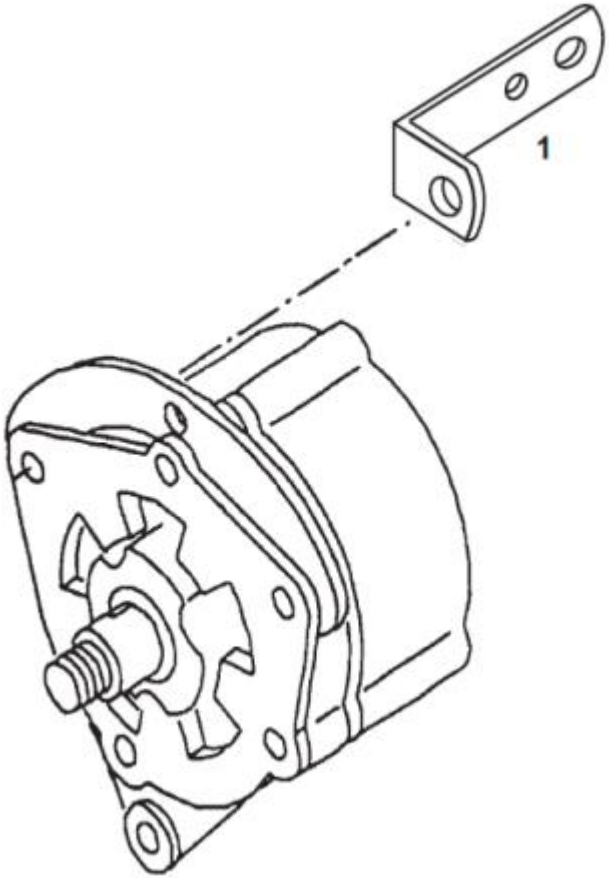

BRACKET FOR LOOM ON ALTERNATOR

Diagram No. 94

SR	PART NO.	DESCRIPTION	QTY	APPLICABLE MODEL	REMARKS
1	51.19101-0391	SUPPORT ALTERNATOR M/C	1	COMMON FOR ALL MODELS EXCEPT MODELS WITH 2 & 4 VCR ENGINES	

BRACKET FOR LOOM ON ALTERNATOR

Diagram No. 95

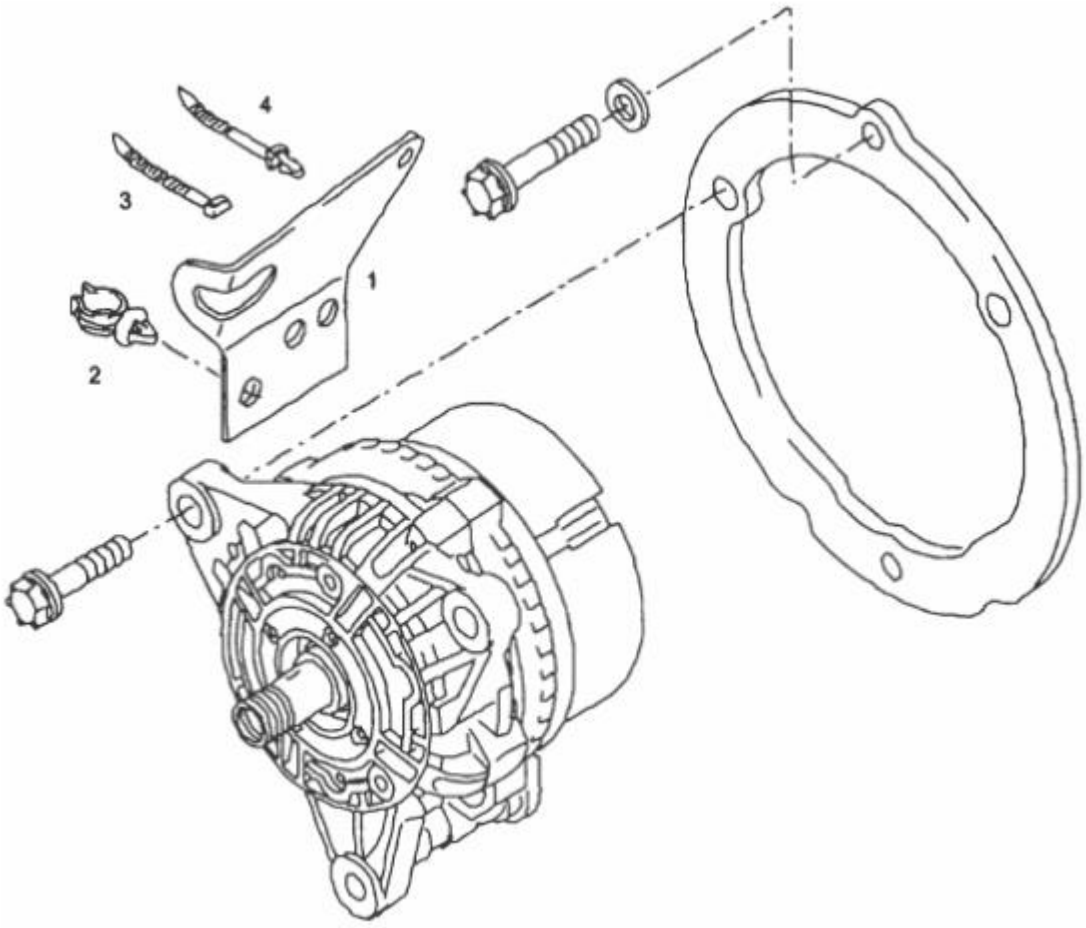

BRACKET FOR LOOM ON ALTERNATOR

Diagram No. 95

SR	PART NO.	DESCRIPTION	QTY	APPLICABLE MODEL	REMARKS
1	64.25441-0022	ANGLE BRACKET FOR CABLE HARNESS SUPPORT	1	COMMON FOR ALL MODELS EXCEPT MODELS WITH 2 & 4 VCR ENGINES & 180 HP ENGINES	
1	64.25441-6004	HOLDER FOR CABLE HARNESS	1	COMMON FOR MODELS WITH 180 HP ENGINES ONLY	
2	64.97430-0001	SUPPORT FOR TUBE DN10	1	COMMON FOR ALL MODELS EXCEPT MODELS WITH 280 HP 2VCR ENGINES	
3	64.97401-0013	CABLE STRAP/CONNECTOR	1	COMMON FOR ALL MODELS EXCEPT MODELS WITH 280 HP 2VCR ENGINES	
4	64.97401-0012	SIMPLE CABLE HOLDER	1	COMMON FOR ALL MODELS	

BRACKET FOR LOOM ON INTAKE PIPE

Diagram No.96

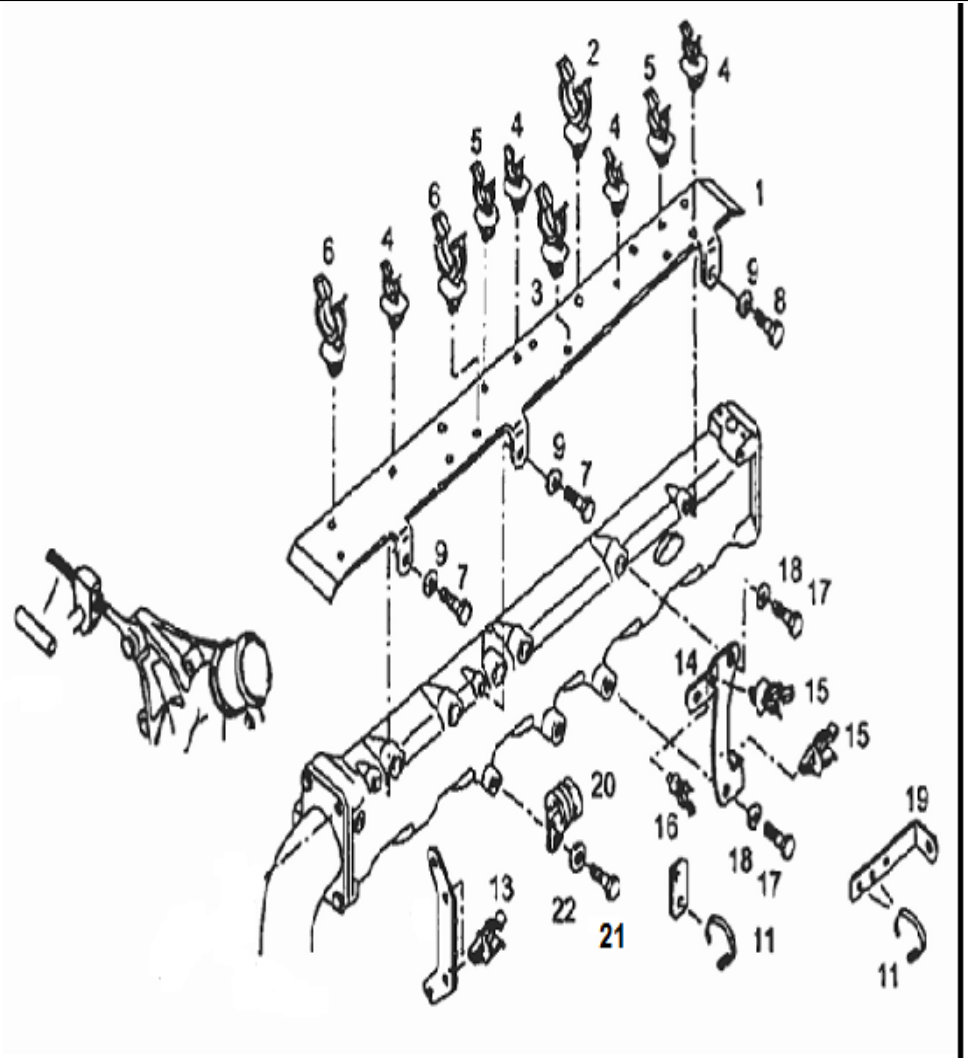

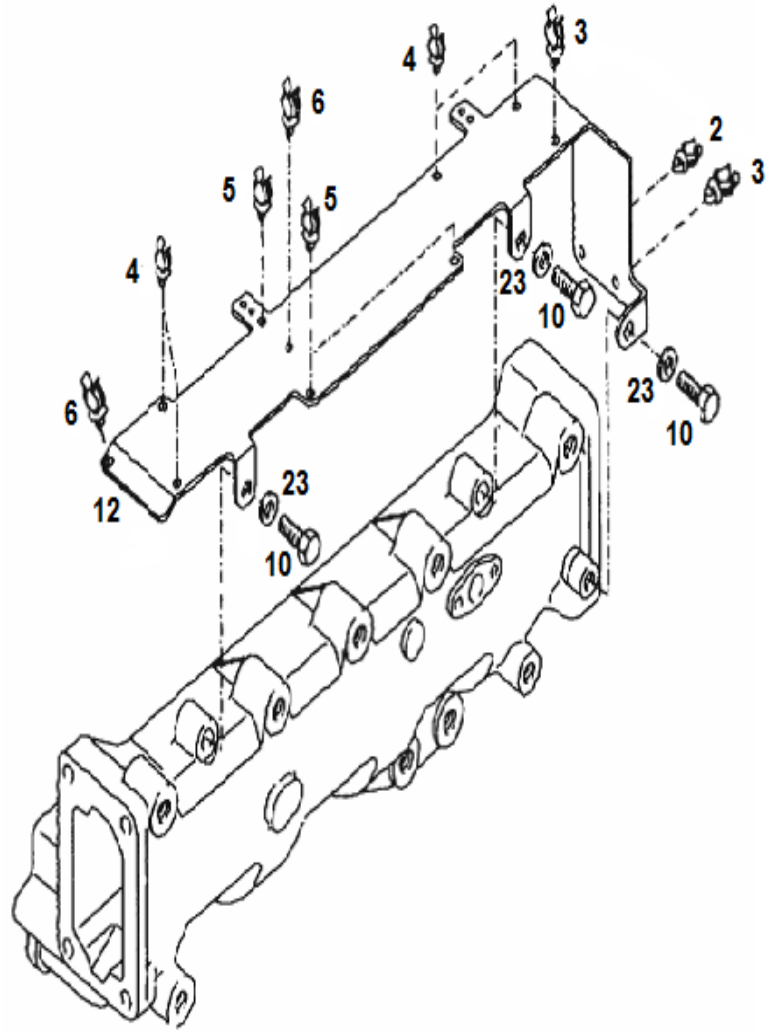

INSTALLATION BRACKET FOR CABLE MOUNTING

Diagram No. 96

SR	PART NO.	DESCRIPTION	QTY	APPLICABLE MODEL	REMARKS
1	64.25441-0008	BKT FOR CABLE HARNESS-ON INTAKE MANIFOLD	1	COMMON FOR 280 HP ENGINES WITH VP 44 FIP & 220 HP BS II & BS III ENGINES	
1	64.25441-6003	HOLDER FOR CABLE HARNESS	1	COMMON FOR 280 HP ENGINES WITH VP 44 FIP & 220 HP BS II & BS III ENGINES	INCLUDES SR NO 2,3,4,5,6 & 64.25441-0008
2	64.97430-0002	SUPPORT FOR TUBE DN13	1	COMMON FOR ALL MODELS	
3	64.97430-0003	SUPPORT FOR TUBE DN 17	1	COMMON FOR ALL ENGINES EXCEPT 2 & 4 VCR ENGINES	
4	64.97430-0005	SUPPORT FOR TUBE DN4.5	4	COMMON FOR ALL ENGINES EXCEPT 2 & 4 VCR ENGINES	
5	64.97430-0006	SUPPORT FOR TUBE DN8.5	2	COMMON FOR ALL ENGINES EXCEPT 2 & 4 VCR ENGINES	
6	64.97430-0004	SUPPORT FOR TUBE DN22	2	COMMON FOR ALL MODELS	
7	64.90020-0093	HHS M8 X20 DIN 933-8.8 BTS:170102.20	2	COMMON FOR ALL MODELS	
8	64.90020-0095	HHS 8X25 DIN 933-8.8 BTS:170102.20	1	COMMON FOR ALL MODELS	
9	64.90710-0026	PL WASHER A8.4 DIN125-ST BTS170202.12	3	COMMON FOR ALL MODELS	
10	64.90020-0093	HHS M8 X20 DIN 933-8.8 BTS:170102.20	3	COMMON FOR ALL MODELS	
11	64.97401-0013	CABLE STRAP/CONNECTOR	10	COMMON FOR ALL MODELS	
12	64.25441-6011	HOLDER- CABLE HARNESS ON INTAKE MANIFOLD	1	COMMON FOR MODELS WITH 180 HP ENGINES	
13	64.97430-0001	SUPPORT FOR TUBE DN10	2	COMMON FOR ALL ENGINES EXCEPT 2 & 4 VCR ENGINES	
14	64.25441-0005	BKT FOR CABLE HARNESS-ON INTAKE MANIFOLD	1	COMMON FOR 280 HP ENGINES WITH VP 44 FIP & 220 HP BS II & BS III ENGINES	
14	64.25441-6002	HOLDER FOR CABLE HARNESS	1	COMMON FOR MODELS WITH 280 HP & 220 HP BS III ENGINES WITH VP 44 FIP.	INCLUDES SR NO 13, 15 & 64.25441-0005

15	64.97430-0003	SUPPORT FOR TUBE DN 17	2	COMMON FOR ALL ENGINES EXCEPT 2 & 4 VCR ENGINES	
16	64.97430-0001	SUPPORT FOR TUBE DN10	1	COMMON FOR ALL ENGINES EXCEPT 2 & 4 VCR ENGINES	
17	64.90020-0159	HEX SCREW M10X16-8.8 MAN183 PHR DIN 933	2	COMMON FOR ALL ENGINES EXCEPT 2 & 4 VCR ENGINES	
18	64.90710-0027	PL WASHER A10.5 DIN125-ST BTS170202.12	2	COMMON FOR ALL MODELS	
-	64.25441-0007	ANGLE BRACKET FOR CABLE HARNESS SUPPORT	1	COMMON FOR ALL ENGINES EXCEPT 180 HP ENGINES & 2 & 4 VCR ENGINES	
19	64.25441-0006	ANGLE BRACKET FOR CABLE HARNESS SUPPORT	1	COMMON FOR ALL ENGINES EXCEPT 180 HP & 4 VCR ENGINES	
20	64.97201-0010	CLAMP A-13 MAN 194	1	COMMON FOR ALL ENGINES EXCEPT 2 & 4 VCR ENGINES	
20A	64.97401-0008	CABLE CLAMP 4.8X166	1	COMMON FOR ALL MODELS	
21	64.90020-0142	HEX SCREW M6X12-8.8 MAN183 A2C DIN 933	1	COMMON FOR ALL ENGINES EXCEPT 2 & 4 VCR ENGINES	
22	64.90710-0025	PL WASHER A6.4 DIN125-ST BTS170202.12	1	COMMON FOR ALL MODELS	
23	64.90710-0026	PLAIN WASHER A8.4	3	COMMON FOR ALL MODELS	
Page No. 97		**REVISION NO. 001**			**VERSION: 001**

ENGINE HARNESS (VP 44 & VE 6 ENGINES)

Diagram No. 97

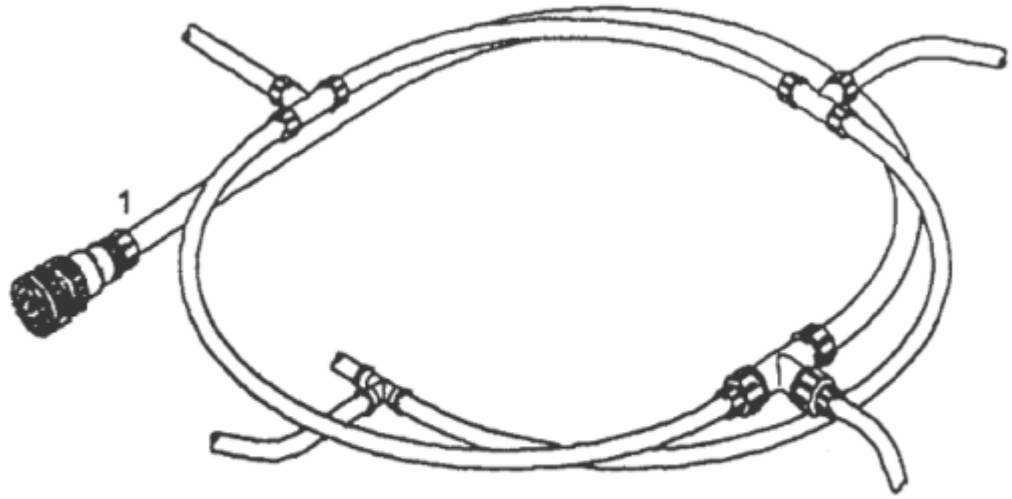

ENGINE HARNESS (VP 44 & VE 6 ENGINES) Diagram No. 97

SR	PART NO.	DESCRIPTION	QTY	APPLICABLE MODEL	REMARKS
1	64.25404-6015	ENGINE HARNESS (D0836)	1	FOR 280 HP ENGINES WITH VP 44 FIP & 220 HP ENGINES WITH VP 44 FIP ONLY	
1	64.25404-6016	CABLE HARNESS (D0834)	1	FOR MODELS WITH 180 HP ENGINES ONLY	
1	64.25404-6017	ENGINE HARNESS EII/6CYL	1	FOR 220 HP BS II ENGINES & 220 HP BS III ENGINES WITH VE6 FIP.	USED IN ENGINES BEFORE VIN : MBKMC5EK4DN012102 (CUT OFF VALID FOR MODELS WITH 220 HP BS III ENGINES WITH VE6 FIP ONLY)
1	64.25404-6042	ENGINE HARNESS W/O FLAME START (KKSB)	1	COMMON FOR MODELS WITH 220 HP BS III ENGINES WITH VE6 FIP ONLY	USED IN ENGINES FROM VIN CUT OFF : MBKMC5EK4DN012102 (CUT OFF VALID FOR MODELS WITH 220 HP BS III ENGINES WITH VE6 FIP ONLY)
1	64.25424-6049	CABLE TRAY ENG HARNESS EDC7 W/O FLAME START	1	COMMON FOR MODELS WITH 2 VCR ENGINES ONLY	FOR VEHICLES FROM VIN: 16106
1	64.25424-6161	ENGINE HARNESS ASSEMBLY	1	COMMON FOR MODELS WITH 2 VCR ENGINES ONLY	FOR VEHICLES BEFORE VIN: 16106

ALTERNATOR DRIVE **Diagram No. 98**

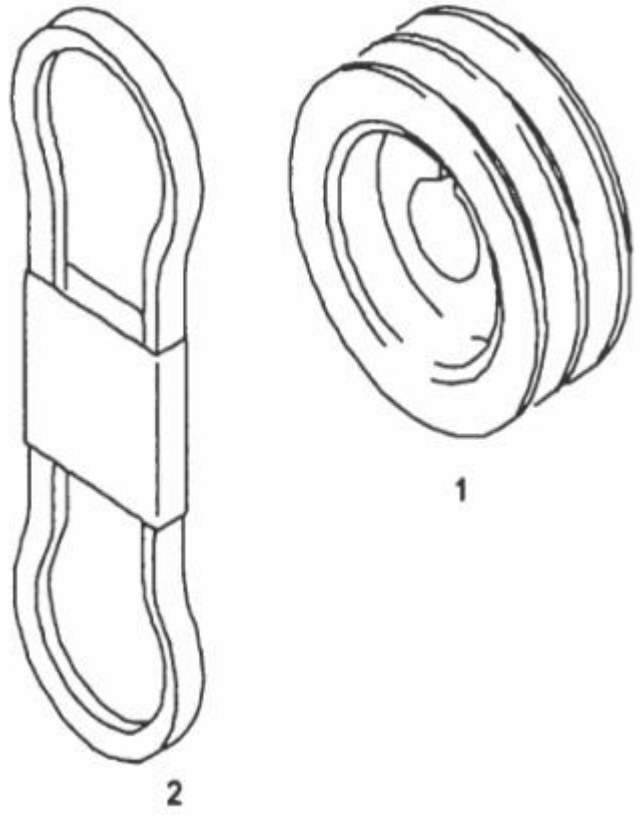

ALTERNATOR DRIVE

Diagram No. 98

SR	PART NO.	DESCRIPTION	QTY	APPLICABLE MODEL	REMARKS
1	64.26105-0003	V-BELT PULLEY FOR ALTERNATOR	1	COMMON FOR ALL ENGINES EXCEPT 2 & 4 VCR ENGINES.	
2	06.58073-1362	V BELT C-10 X 1375X2 MAN 316	1 SET	COMMON FOR ALL ENGINES EXCEPT 2 & 4 VCR ENGINES.	06.58073-1361 ALTERNATE
2	06.58073-1361	V BELT C-10 X 1375 MAN 316	1	COMMON FOR ALL ENGINES EXCEPT 2 & 4 VCR ENGINES.	06.58073-1362 ALTERNATE
2	51.96820-0243	POLY V BELT 8X1275	1	COMMON FOR 2 & 4 VCR ENGINES ONLY	

MOUNTING PARTS FOR ALTERNATOR

Diagram No. 99

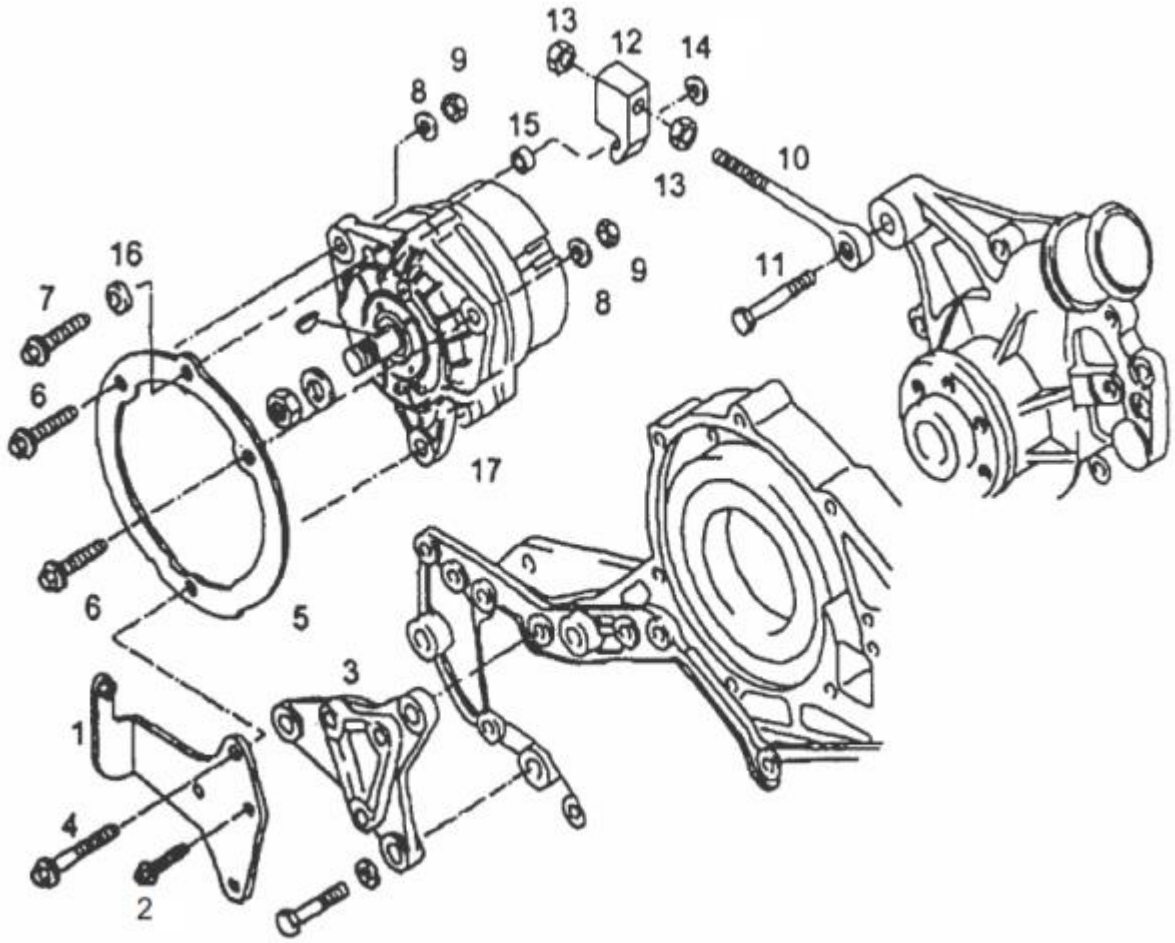

MOUNTING PARTS FOR ALTERNATOR

Diagram No.99

SR	PART NO.	DESCRIPTION	QTY	APPLICABLE MODEL	REMARKS
1	64.19101-5001	HOLDER FOR ALTERNATOR SUPPORT	1	FOR ALL ENGINES EXCEPT 2 & 4 VCR ENGINES	
2	64.90030-0010	SCREW B M8X40-8.8-MAN183-PHR DIN 34801	3	COMMON FOR ALL MODELS	06.03221-0609 ALTERNATE
3	51.19101-0391	SUPPORT ALTERNATOR M/C	1	FOR ALL ENGINES EXCEPT 2 & 4 VCR ENGINES	
4	06.01283-7233	HEX SCREW M10X120-8.8A MAN183-PHR DIN933	1	FOR ALL ENGINES EXCEPT 2 & 4 VCR ENGINES	64.90020-0164 ALTERNATE
-	64.90710-0027	PL WASHER A10.5 DIN125-ST BTS170202.12	1	COMMON FOR ALL MODELS	
5	64.19101-0001	SUPPORTING RING FOR ALTERNATOR	1	FOR ALL ENGINES EXCEPT 2 & 4 VCR ENGINES	
6	64.90020-0166	HEX SCREW M12X45-8.8 MAN183 PHR DIN 933	2	FOR ALL ENGINES EXCEPT 2 & 4 VCR ENGINES	
7	64.90020-0167	HEX SCREW M12X55-8.8 MAN183 PHR DIN 933	1	FOR ALL ENGINES EXCEPT 2 & 4 VCR ENGINES	
8	64.90710-0029	PL WASHER A13 DIN125-ST BTS170202.12	2	FOR ALL ENGINES EXCEPT 2 & 4 VCR ENGINES	
9	64.90501-0007	HEX NUT M12 DIN934-8 MAN183-A3C	2	FOR ALL ENGINES EXCEPT 2 & 4 VCR ENGINES	
10	64.90441-0001	EYE BOLT	1	FOR ALL ENGINES EXCEPT 2 & 4 VCR ENGINES	
11	64.90020-0165	HEX SCREW M12X35-8.8 MAN183 PHR DIN 933	1	FOR ALL ENGINES EXCEPT 2 & 4 VCR ENGINES	
12	64.19107-0002	GUIDING PIECE FOR ALTERNATOR	1	FOR ALL ENGINES EXCEPT 2 & 4 VCR ENGINES	
13	64.90501-0007	HEX NUT M12 DIN934-8 MAN183-A3C	2	FOR ALL ENGINES EXCEPT 2 & 4 VCR ENGINES	
14	64.90710-0029	PL WASHER A13 DIN125-ST BTS170202.12	2	FOR ALL ENGINES EXCEPT 2 & 4 VCR ENGINES	
17	64.26101-6001	ALTERNATOR WITH PULLEY (80AMP)	1	FOR ALL ENGINES EXCEPT 2 & 4 VCR ENGINES	

MOUNTING PARTS FOR ALTERNATOR VP 44 (BUS)

Diagram No.100

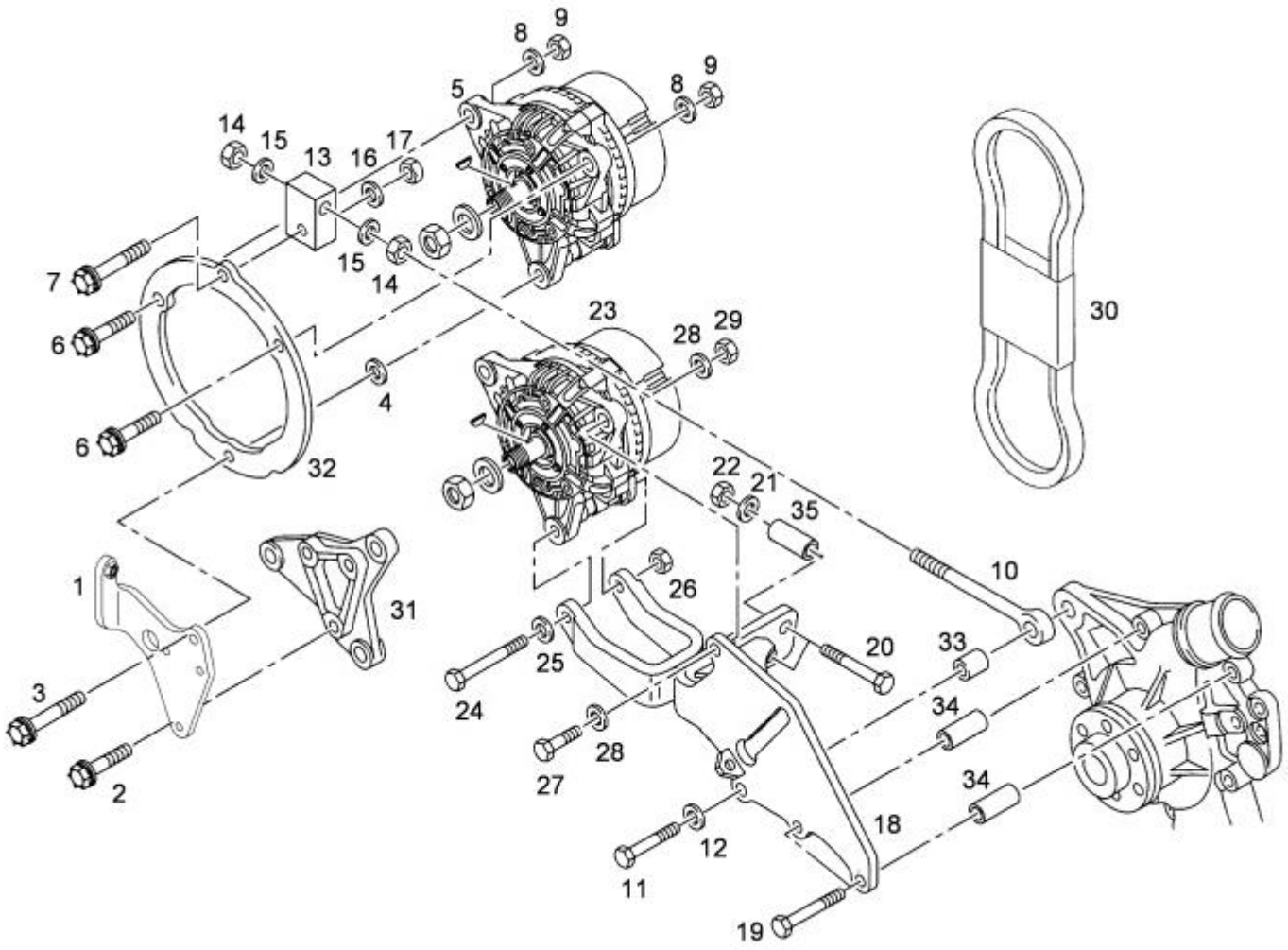

MOUNTING PARTS FOR ALTERNATOR VP 44 (BUS) Diagram No.100

SR	PART NO.	DESCRIPTION	QTY	APPLICABLE MODEL	REMARKS
1	64.19101-5001	HOLDER FOR ALTERNATOR SUPPORT	1		
2	64.90030-0010	SCREW B M8X40-8.8-MAN183-PHR DIN 34801	3		
3	06.01283-7233	HEX SCREW M10X120-8.8A MAN183-PHR DIN933	1		
4	64.90710-0027	PLAIN WASHER A10.5 DIN125-ST A3C	1		
5	64.26101-6001	ALTERNATOR WITH PULLEY (80AMP)	1	FOR ALL ENGINES EXCEPT 2 & 4 VCR ENGINES	
6	64.90020-0166	HEX SCREW M12X45-8.8 MAN183 PHR DIN 933	2		
7	64.90020-0167	HEX SCREW M12X55-8.8 MAN183 PHR DIN 933	1		
8	64.90710-0029	PLAIN WASHER A13 DIN125-ST A3C	2		
9	64.90501-0007	HEX NUT M12 DIN934-8 MAN183-A3C	2		
10	64.90441-0001	EYE BOLT	1		
11	64.90020-0167	HEX SCREW M12X55-8.8 MAN183 PHR DIN 933	1		
12	64.90710-0029	PLAIN WASHER A13 DIN125-ST A3C	1		
13	64.19107-0002	GUIDING PIECE FOR ALTERNATOR	1		
14	64.90501-0007	HEX NUT M12 DIN934-8 MAN183-A3C	2		
15	64.90710-0029	PLAIN WASHER A13 DIN125-ST A3C	2		
16	64.91701-0001	WASHER	1		
17	64.90501-0007	HEX NUT M12 DIN934-8 MAN183-A3C	1		
18	51.19101-5223	SUPPORT FOR GENERATOR	1		

19	64.90030-0059	FLANGE BOLT M8X90-10.9 MAN183-B1 DIN6921	2		
20	06.01014-9223	HEX STUD M10X90-10.9 MAN183 PHR DIN 931	2		
21	64.90710-0029	PLAIN WASHER A13 DIN125-ST A3C	4		
22	64.90501-0048	HEX NUT M10-8-A3C DIN 934	4		
23	64.26101-6001	ALTERNATOR WITH PULLEY (80AMP)	1	FOR ALL ENGINES EXCEPT 2 & 4 VCR ENGINES	
24	06.01283-7233	HEX SCREW M10X120-8.8A MAN183-PHR DIN93	1		
25	64.90710-0029	PLAIN WASHER A13 DIN125-ST A3C	1		
26	64.90501-0048	HEX NUT M10-8-A3C DIN 934	1		
27	64.90020-0166	HEX SCREW M12X45-8.8 MAN183 PHR DIN 933	1		
28	64.90710-0029	PLAIN WASHER A13 DIN125-ST A3C	2		
29	64.90501-0007	HEX NUT M12 DIN934-8 MAN183-A3C	1		
30	06.58073-1252	NARROW V BELT SET 10X1100X2	1 SET		
30	06.58073-1362	V BELT C-10 X 1375X2 MAN 316	1 SET		
31	51.19101-0391	SUPPORT ALTERNATOR M/C	1		
32	64.19101-0005	SUPPORTING RING FOR ALTERNATOR (BUS)	1		
33	64.91701-0028	BUSH 12.5X22X11.1	1		
34	64.91701-0030	BUSH 9X16X37.7	2		
35	64.91701-0031	BUSH 11X22X50	2		
Page No. 101		**REVISION NO. 00**			**VERSION: 001**

MOUNTING PARTS FOR ALTERNATOR 2 VCR (BUS)

Diagram No.101

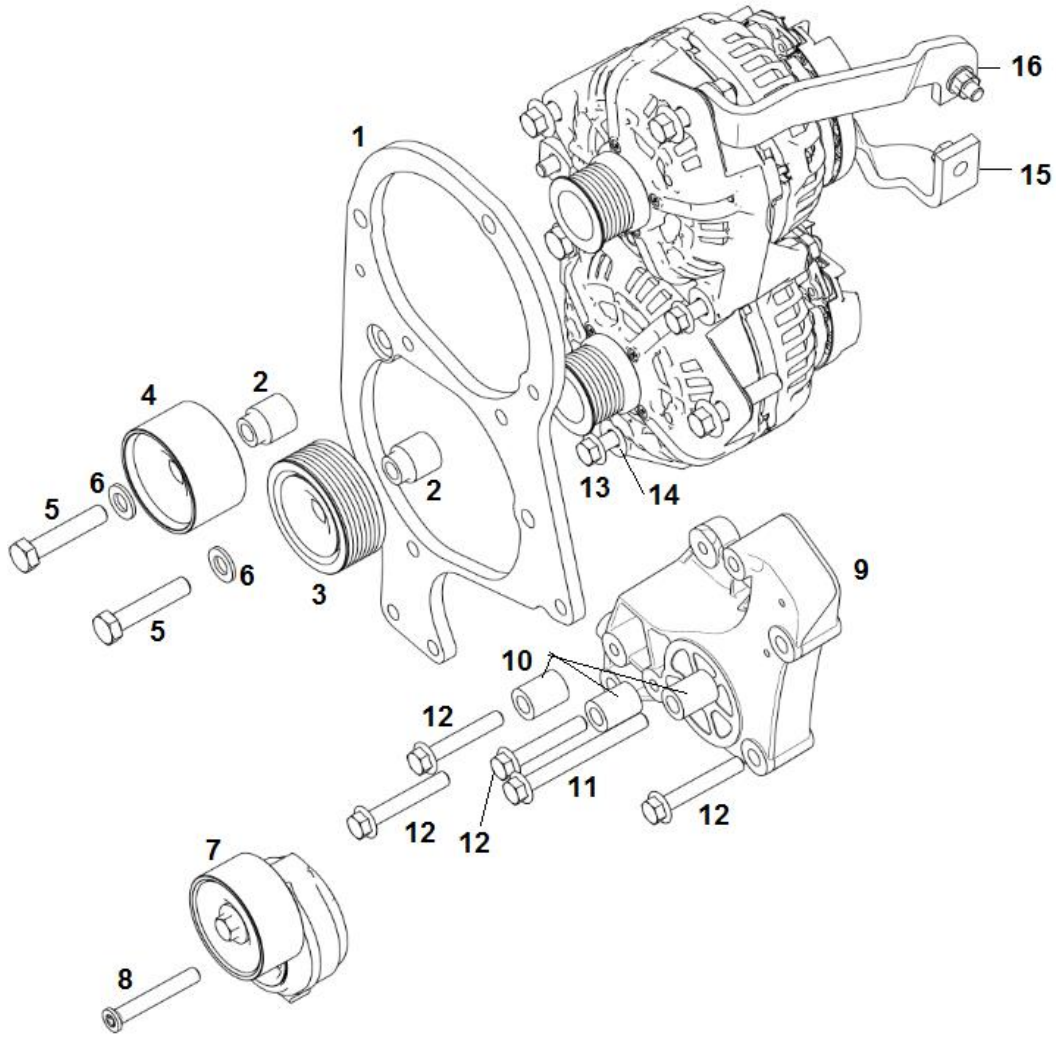

MOUNTING PARTS FOR ALTERNATOR 2 VCR (BUS) Diagram No.101

SR	PART NO.	DESCRIPTION	QTY	APPLICABLE MODEL	REMARKS
1	64.19101-0630	BRACKET FOR ALTERNATOR FRONT	1	FOR BUS WITH 2 VCR ENGINE	
2	64.93030-0419	SPACER AT ALT. ASSLY	2	FOR BUS WITH 2 VCR ENGINE	
3	51.95800-6082	IDLER	1	FOR BUS WITH 2 VCR ENGINE	
4	51.95800-6107	IDLER	1	FOR BUS WITH 2 VCR ENGINE	
5	06.01283-7321	HEX SCREW M12X50-8.8-MAN183-PHR DIN 933	2	FOR BUS WITH 2 VCR ENGINE	
6	06.15013-0413	WASHER A 13 -200HV-MAN183	2	FOR BUS WITH 2 VCR ENGINE	
7	51.95800-7499	AUTOMATIC BELT TENSIONER	1	FOR BUS WITH 2 VCR ENGINE	
8	64.90040-0052	C. S BOLT - ALTERNATOR M10X70- 10.9	1	FOR BUS WITH 2 VCR ENGINE	
9	64.19101-0515	ALTERNATOR SUPPORT BRACKET	1	FOR BUS WITH 2 VCR ENGINE	
10	64.93030-0418	BUSH 12.5x22x28.5	3	FOR BUS WITH 2 VCR ENGINE	
11	06.03216-8417	HEX. SCREW M10X100-10.9-MAN183-B1 DIN 69	1	FOR BUS WITH 2 VCR ENGINE	
12	06.03216-8412	HEX. SCREW M10X60-10.9-MAN183B1 DIN 6921	4	FOR BUS WITH 2 VCR ENGINE	
13	06.03216-8419	HEX SCREW M10X120-10.9 DIN6921 MAN183B1	1	FOR BUS WITH 2 VCR ENGINE	
14	64.90710-0527	WASHER D12,5/24/5	1	FOR BUS WITH 2 VCR ENGINE	
15	64.19101-0633	TWIN ALTERNATE SUPPORT BKT. REAR-2	1	FOR BUS WITH 2 VCR ENGINE	
16	64.19101-0632	TWIN ALTERNATE SUPPORT BKT. REAR-1	1	FOR BUS WITH 2 VCR ENGINE	

STARTER WITH MOUNTING PARTS

Diagram No. 102

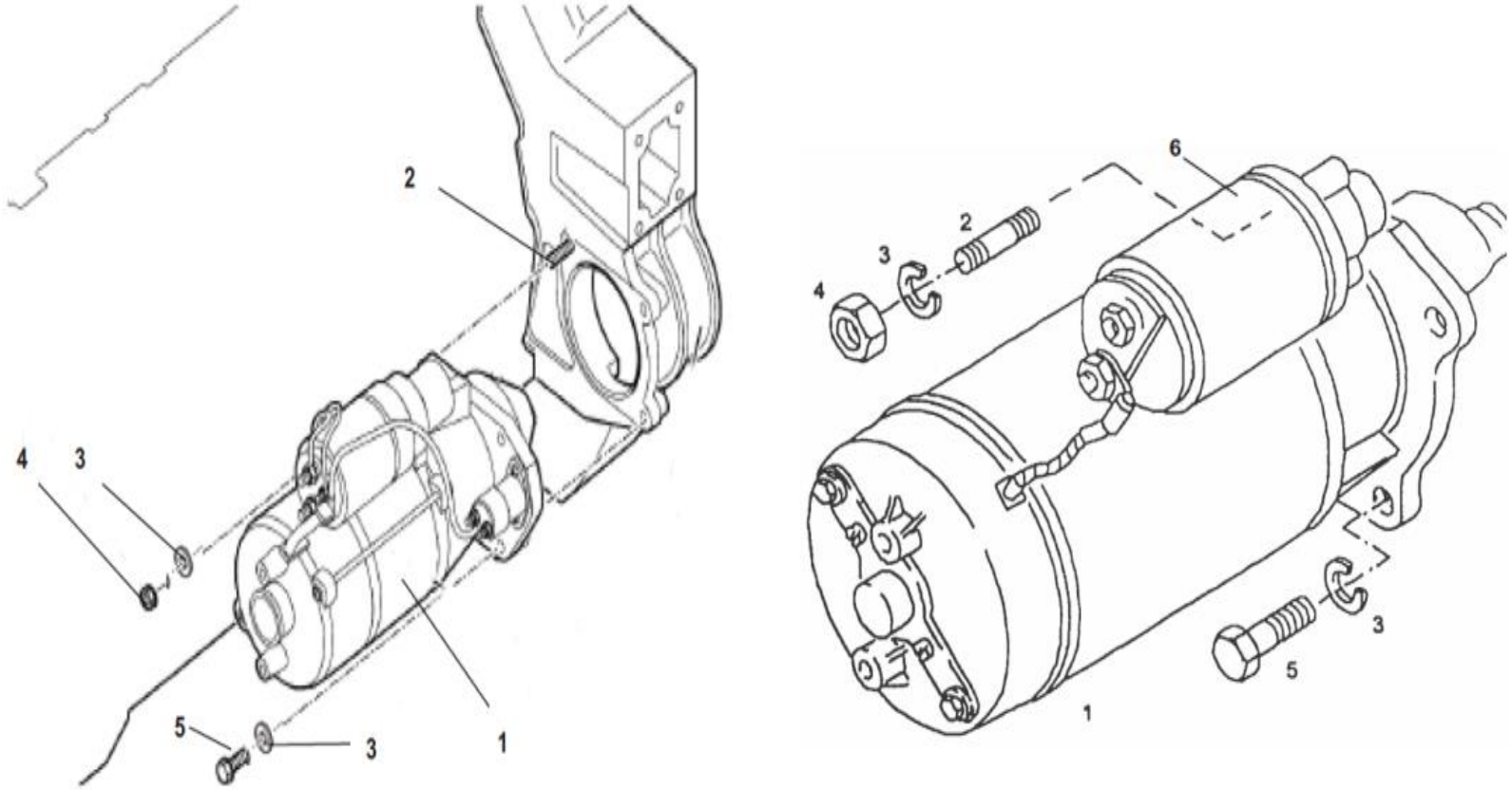

STARTER WITH MOUNTING PARTS

Diagram No. 102

SR	PART NO.	DESCRIPTION	QTY	APPLICABLE MODEL	REMARKS
1	64.26201-7001	STARTER MOTOR (24V-4KW-11TEETH)	1	COMMON FOR ALL ENGINES EXCEPT 2 & 4 VCR ENGINES	
1	51.26201-7263	STARTER MOTOR (24V-4KW-11TEETH)	1	COMMON FOR 2 & 4 VCR ENGINES ONLY	51.26201-7236 ALTERNATE
2	64.90201-0009	STUD M10X28 -8.8 ZNPHR3F DIN 835	1	COMMON FOR ALL MODELS	
3	64.90710-0027	PL WASHER A10.5 DIN125-ST BTS170202.12	3	COMMON FOR ALL MODELS	
4	64.90501-0048	HEX NUT M10-8-A3C DIN 934	1	COMMON FOR ALL MODELS	SUPERCEDED BY 06.11240-0406
5	64.90020-0161	HEX SCREW M10X35-8.8 MAN183 PHR DIN 933	2	COMMON FOR ALL MODELS	06.01013-9228 ALTERNATE
6	64.25902-6007	RELAY ASSEMBLY KIT	1	COMMON FOR ALL ENGINES EXCEPT 2 & 4 VCR ENGINES	

CHARGING PRESSURE SENSOR

Diagram No. 103

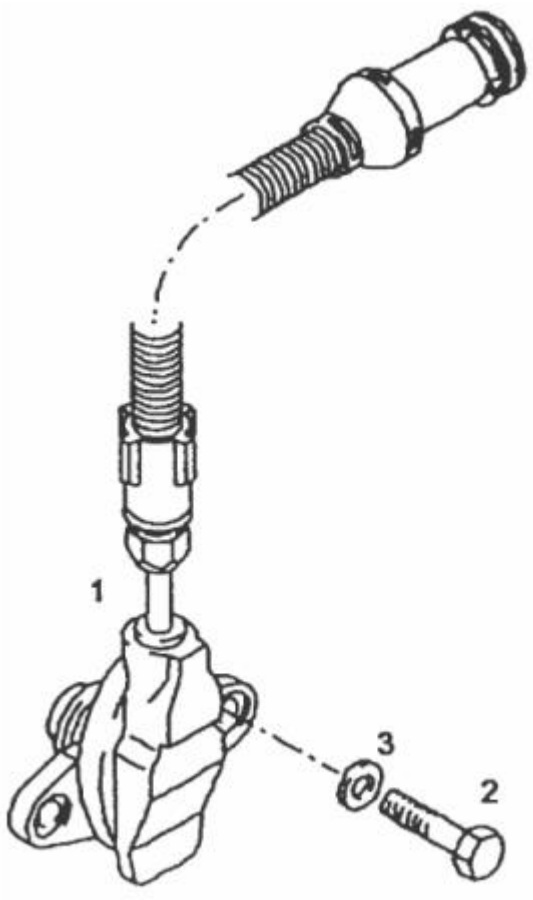

CHARGING PRESSURE SENSOR

Diagram No. 103

SR	PART NO.	DESCRIPTION	QTY	APPLICABLE MODEL	REMARKS
1	51.27421-0180	PRESSURE SENSOR	1	COMMON FOR 280 HP ENGINES WITH VP 44 FIP , 220 HP BS III ENGINES WITH VP 44 FIP & 180 HP ENGINES ONLY	
2	64.90201-0010	STUD M6X16-8.8-ZNPHR3F	2	COMMON FOR ALL MODELS	
3	64.90710-0011	WASHER	2	COMMON FOR ALL MODELS	

OIL PRESSURE SWITCH **Diagram No. 104**

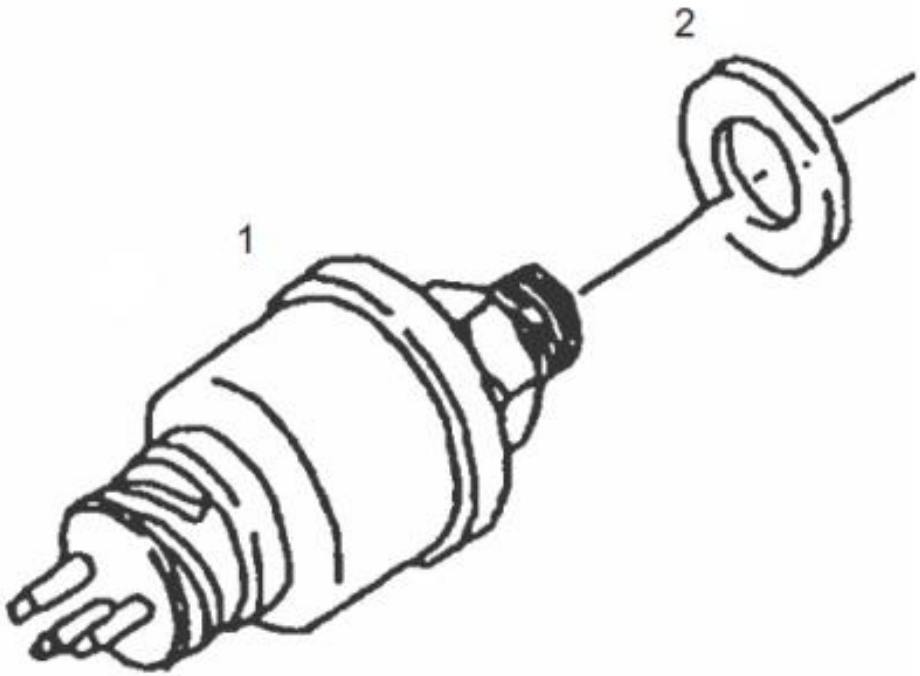

OIL PRESSURE SWITCH

Diagram No. 104

SR	PART NO.	DESCRIPTION	QTY	APPLICABLE MODEL	REMARKS
1	64.27430-0001	OIL PRESSURE SWITCH	1	COMMON FOR ALL MODELS	51.27430-0007 ALTERNATE
2	06.56631-0109	SEALING RING BS18.7X26.0-ST	1	COMMON FOR ALL MODELS	64.96501-0049 ALTERNATE

TEMPERATURE SENDER IN COOLANT ELBOW

Diagram No. 105

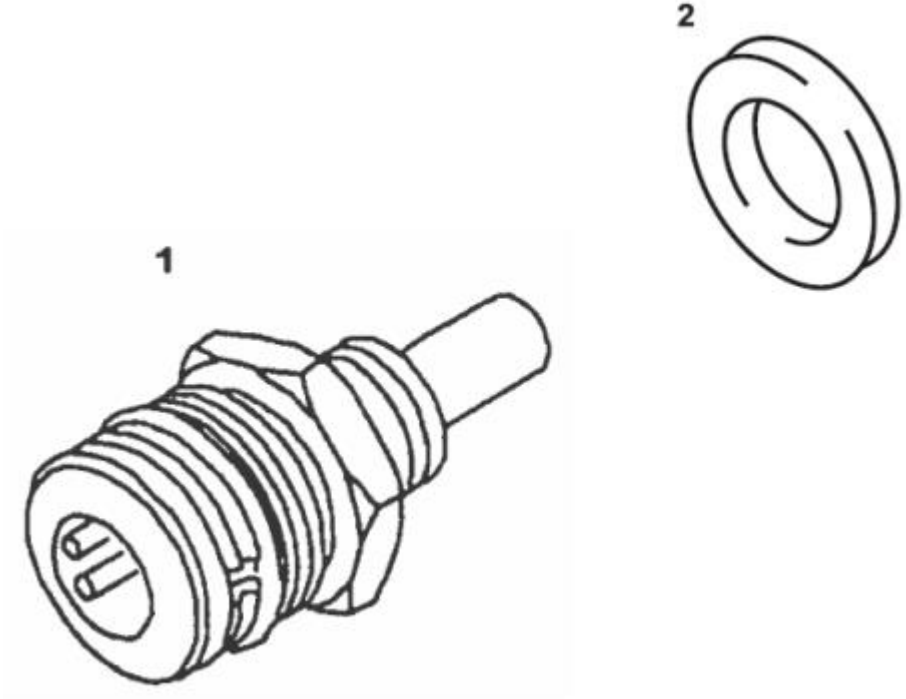

TEMPERATURE SENDER IN COOLANT ELBOW

Diagram No. 105

S R	PART NO.	DESCRIPTION	QTY	APPLICABLE MODEL	REMARKS
1	51.27421-0113	WATER TEMPERATURE SENSOR	1	FOR ENGINES WITH 280 HP ENGINES WITH VP 44 FIP , 220 HP BS III ENGINES WITH VP 44 FIP & 180 HP ENGINES ONLY	
2	06.56631-0107	SEALING RING BS-16,7X24,0-ST FPM1-80	1	COMMON FOR ALL MODELS	

WATER TEMPERATURE SENSOR WITH WARMING CONTACT

Diagram No. 106

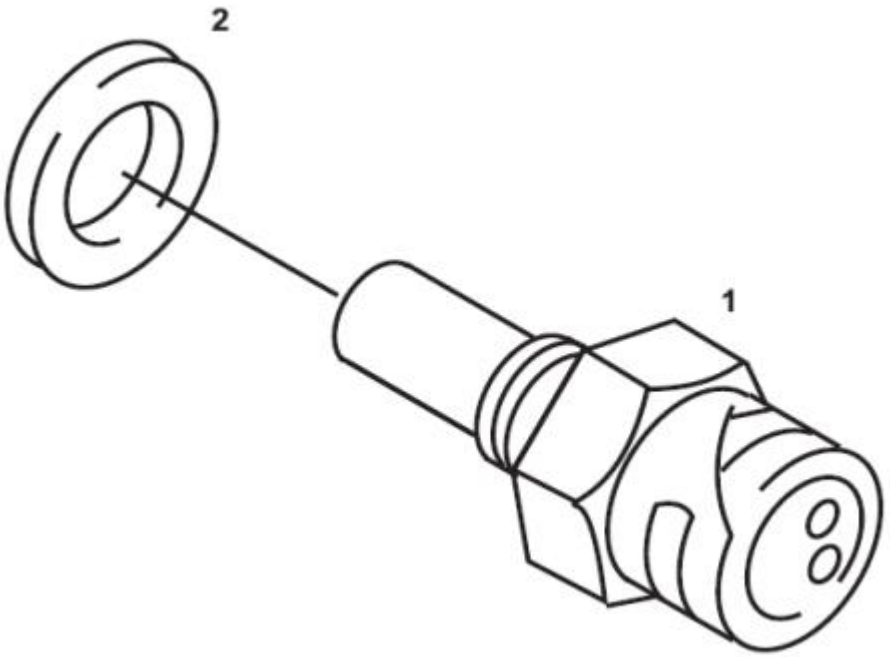

WATER TEMPERATURE SENSOR WITH WARMING CONTACT

Diagram No. 106

S R	PART NO.	DESCRIPTION	QTY	APPLICABLE MODEL	REMARKS
1	51.27421-0151	TEMP SENSOR 106C+3K BEI-15K/MIN	1	COMMON FOR ALL MODELS	64.27421-0001 ALTERNATE
2	06.56631-0106	SEALING RING BS-14,7X22,O-ST TPMI-80	1	COMMON FOR ALL MODELS	64.96501-0047 ALTERNATE

STEERING BOOSTER PUMP WITH MOUNTING PARTS

Diagram No. 107

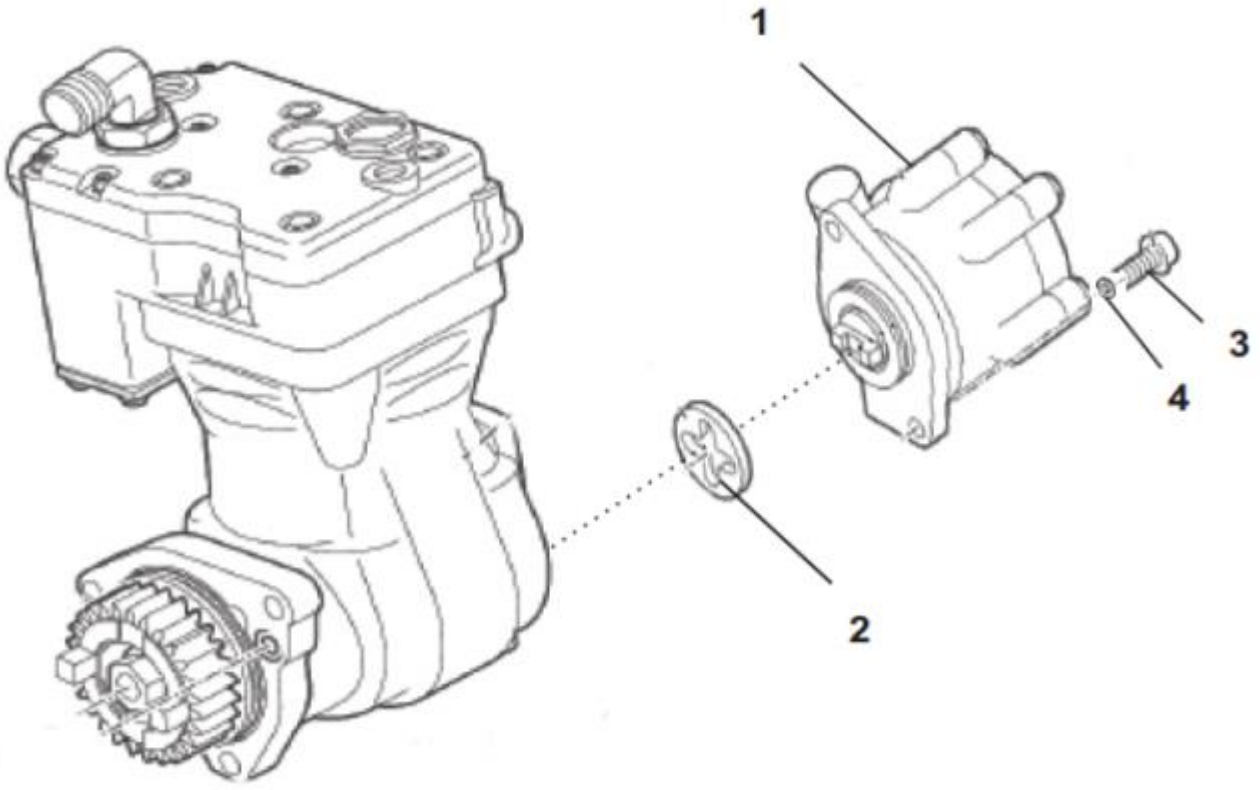

STEERING BOOSTER PUMP WITH MOUNTING PARTS Diagram No. 107

SR	PART NO.	DESCRIPTION	QTY	APPLICABLE MODEL	REMARKS
1	64.47101-6001	POWER STEERING PUMP	1	COMMON FOR ALL MODELS EXCEPT 8X4 & 8X2 MODELS	
1	81.47101-6137	POWER STEERING PUMP	1	COMMON FOR 8X4 & 8X2 MODELS ONLY	
2	64.47104-0001	INTERMEDIATE DRIVE PIECE	1	COMMON FOR ALL MODELS	
3	64.90030-0027	SHS M10X30 DIN 912-12.9 BTS:170202.22	2	COMMON FOR ALL MODELS	
4	64.90710-0010	WASHER D11/21/3	2	COMMON FOR ALL MODELS	

230 CC AIR COMPRESSOR KITS

Diagram No. 108

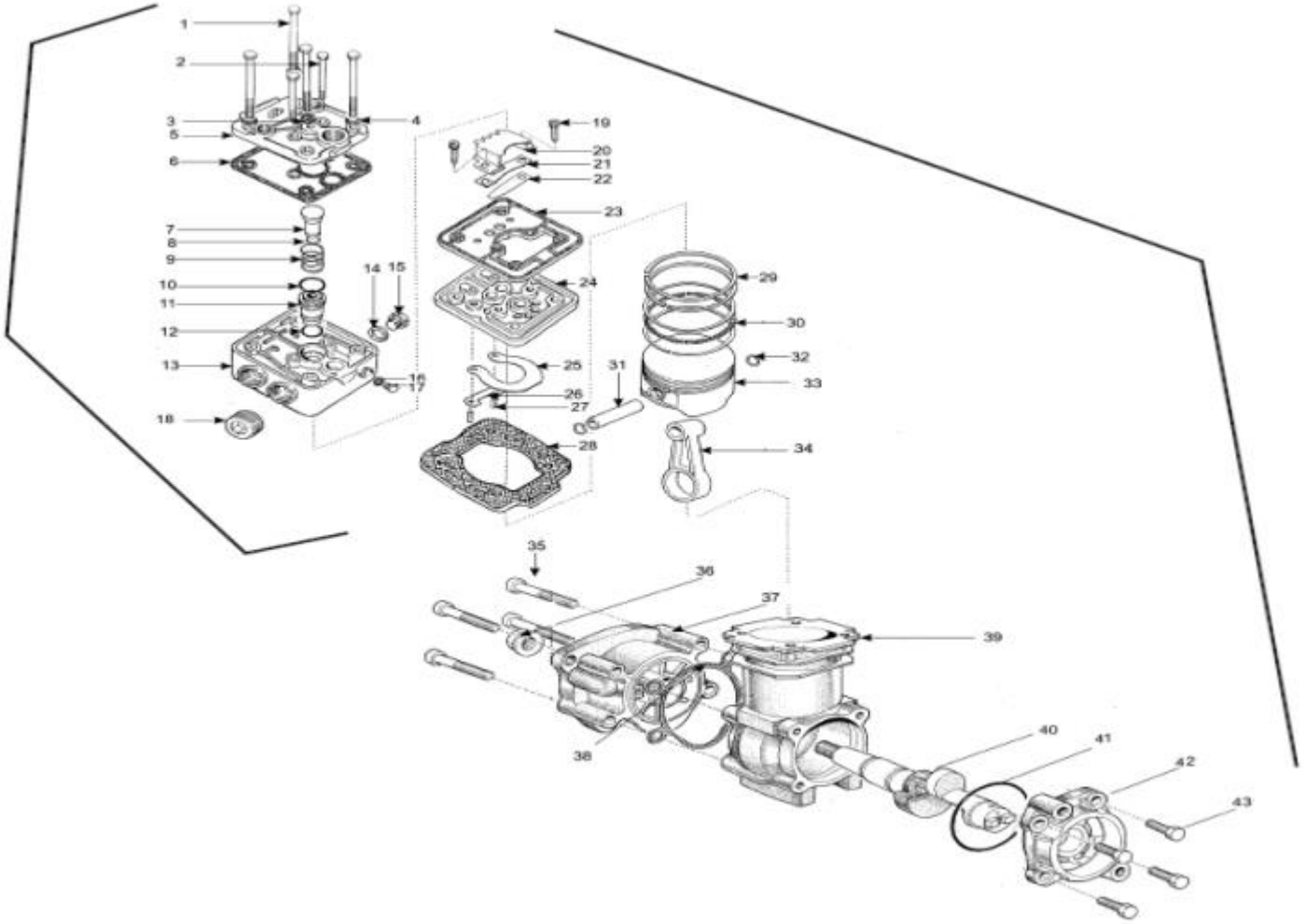

230 CC AIR COMPRESSOR KITS

Diagram No. 108

SR	PART NO.	DESCRIPTION	QTY	APPLICABLE MODEL	REMARKS
1	64.52116-7001	MINOR REPAIR KIT	1	COMMON FOR 230 CC AIR COMPRESSOR ONLY	CONSIST OF 6,8,9,10,12,23,27,28
2	64.52116-7002	MAJOR REPAIR KIT	1	COMMON FOR 230 CC AIR COMPRESSOR ONLY	CONSIST OF 6,8,9,10,12,23,27,28,36,38
3	64.52116-7003	PISTON RING REPAIR KIT	1	COMMON FOR 230 CC AIR COMPRESSOR ONLY	CONSISTS OF 6,23,28,29,30
4	64.52116-7004	PISTON REPAIR KIT	1	COMMON FOR 230 CC AIR COMPRESSOR ONLY	CONSISTS OF 6,23,28,29,30,31,32,33
13	64.54100-6001	CYLINDER HEAD ASSY.	1	COMMON FOR 230 CC AIR COMPRESSOR ONLY	
25	64.54122-6001	REED VALVE ASSY	1	COMMON FOR 230 CC AIR COMPRESSOR ONLY	

COOLANT PIPE FOR 230 CC AIR COMPRESSOR

Diagram No. 109

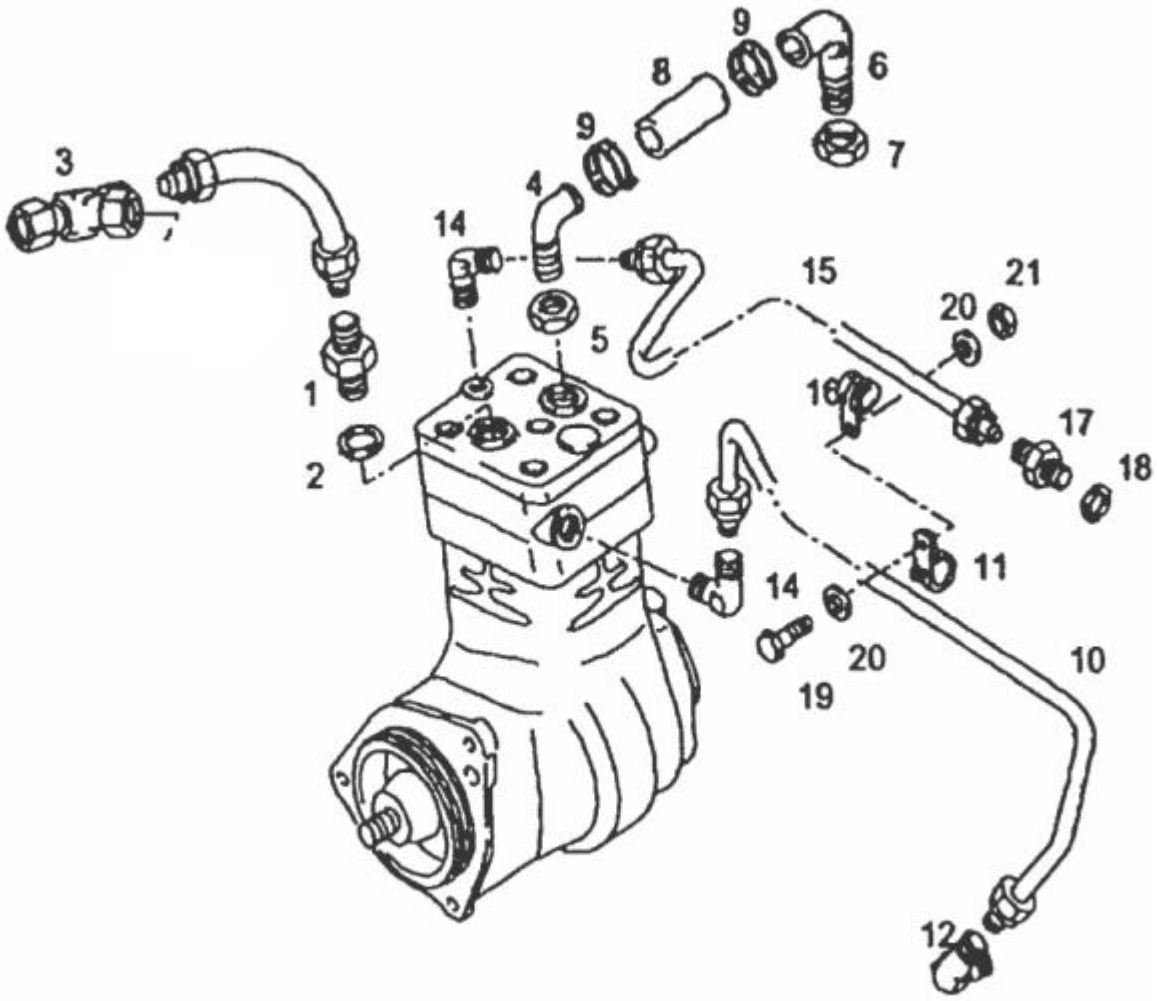

COOLANT PIPE FOR 1-CYLINDER AIR COMPRESSOR Diagram No. 109

SR	PART NO.	DESCRIPTION	QTY	APPLICABLE MODEL	REMARKS
1	64.98110-0002	ADAPTOR (M26X1.5-M26X1.5) N15026 – 181	1	COMMON FOR ALL MODELS	
2	64.90720-0002	THRUST WASHER M26X1.5	1	COMMON FOR ALL MODELS	
3	64.96301-0007	COMPRESSOR LINE ELBOW	1	COMMON FOR ALL MODELS	SUPERSEDED BY 64.96301-0044
4	64.54120-0001	AIR COMPRESSOR INTAKE ELBOW	1	COMMON FOR 25.180 HL MODEL ONLY	
5	64.90620-0003	HEX NUT M26X1.5-4D ZNPHR 5F DIN 74305	1	COMMON FOR ALL MODELS	
6	64.54120-0002	AIR COMPRESSOR INTAKE ELBOW	1	COMMON FOR ALL MODELS	
7	64.90801-0001	HEX NUT M30X1.5	1	COMMON FOR ALL MODELS	
8	64.96330-0025	HOSE-AIR COMPRES. INLET 6-CYL.E III&EII	1	COMMON FOR 25.180 HL MODEL ONLY	
9	64.97445-0023	SPRING BAND CLAMP 35X12	2	COMMON FOR ALL MODELS	
10	64.96330-0032	COOLANT LINE W/O HOLDING CLAMP	1	COMMON FOR 25.180 HL MODEL ONLY	
11	64.97445-0018	HOLDING CLAMP D1-10X19 W1-2 EPDM DIN3016	1	COMMON FOR ALL MODELS EXCEPT MODELS WITH 280 HP 2VCR ENGINES	ALTERNATE 51.97401-0206
14	51.98110-0228	WE SUPPORT L10M-ST A4C DIN 3903	1	COMMON FOR ALL MODELS EXCEPT MODELS WITH 220 HP BS III ENGINES WITH VE 6 FIP	
14	51.98110-0186	CONNECTOR FOR WATER CONNECTION	2	COMMON FOR ALL MODELS EXCEPT MODELS WITH 220 HP BS III ENGINES WITH VE 6 FIP	
15	64.96330-0033	COOLANT LINE W/O HOLDING CLAMP	1	COMMON FOR MODELS WITH 180 HP ENGINES ONLY	
16	64.97445-0018	HOLDING CLAMP D1-10X19 W1-2 EPDM DIN3016	1	COMMON FOR ALL MODELS EXCEPT MODELS WITH 2 & 4 VCR ENGINES	ALTERNATE 51.97401-0206

17	64.98001-0001	PIPE FITTING L10A-M-ST-A4C DIN 3901	1	COMMON FOR ALL MODELS EXCEPT MODELS WITH 2 & 4 VCR ENGINES	
18	06.56631-0106	SEALING RING BS-14,7X22,O-ST TPMI-80	1	COMMON FOR ALL MODELS	
19	64.90020-0088	HHS M6X20 DIN 933-8.8 BTS:170202.22	1	COMMON FOR ALL MODELS	
20	64.90710-0025	PL WASHER A6.4 DIN125-ST BTS170202.12	2	COMMON FOR ALL MODELS	
21	64.90501-0036	HEX NUT M6X1.00 DIN 934-8 BTS:170202.22	1	COMMON FOR ALL MODELS	
Page No. 110		**REVISION NO. 001**			**VERSION: 001**

COOLANT PIPE FOR 230 CC AIR COMPRESSOR

Diagram No. 110

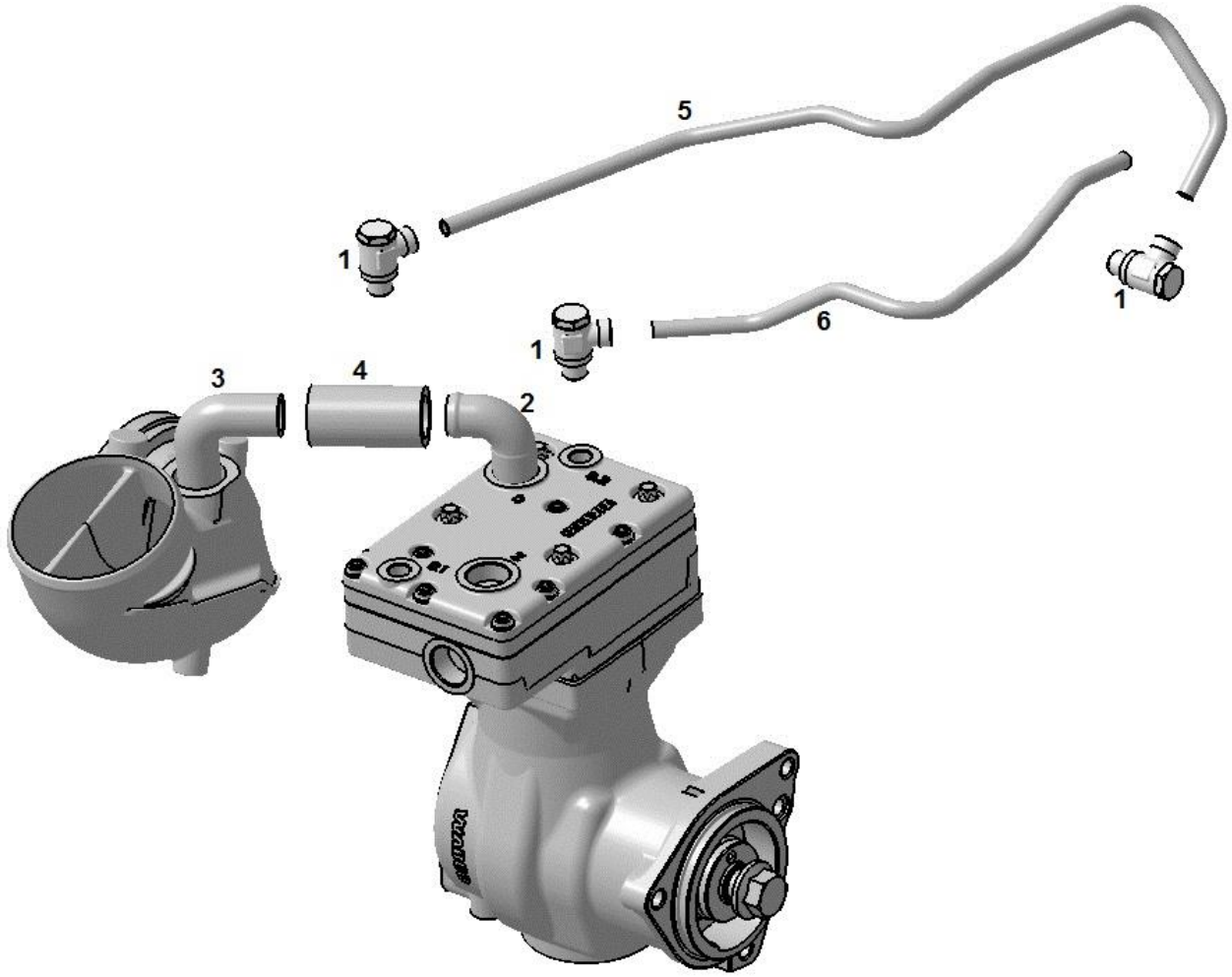

COOLANT PIPE FOR 1-CYLINDER AIR COMPRESSOR Diagram No. 110

S R	PART NO.	DESCRIPTION	QTY	APPLICABLE MODEL	REMARKS
1	51.98110-0235	CONNECTOR FOR WATER CONNECTION	3	COMMON FOR ALL MODELS	
2	64.54120-6004	ASSY SUCTION MANIFOLD	1	COMMON FOR 280 & 220HP ENGINES WITH VP44 FIP & VE6 FIP (BSII & BSIII)	
3	64.54120-6002	AIR COMPRESSOR INTAKE ELBOW	1	COMMON FOR 280 & 220HP ENGINES WITH VP44 FIP & VE6 FIP (BSII & BSIII)	
4	64.96330-0040	HOSE-AIR COMPRES.INLET (220HP EURO-III)	1	COMMON FOR ALL MODELS	SUPERCEDED BY 64.96330-0025
4A	64.97445-0023	SPRING BAND CLAMP 35X12	2	COMMON FOR 280 & 220HP ENGINES WITH VP44 FIP & VE6 FIP (BSII & BSIII)	
5	64.06303-5020	COOLANT LINE –COMPRESSOR TO THERMOSTAT	1	COMMON FOR 280 & 220HP ENGINES WITH VP44 FIP & VE6 FIP (BSII & BSIII)	
6	64.06303-5019	COOLANT LINE –COOLANT PUMP TO COMPRESSOR	1	COMMON FOR 280 & 220HP ENGINES WITH VP44 FIP & VE6 FIP (BSII & BSIII)	

ENGINE OVERHAUL KITS

SR	PART NO.	DESCRIPTION	QTY	APPLICABLE MODEL	REMARKS
1	64.00900-6001	SET OF SEALS	1	COMMON FOR ALL MODELS	ENGINE REPAIR GASKET KIT
2	64.02511-7001	PISTON KIT	1	FOR MODELS WITH 280 HP & 220 HP BS II & BS III ENGINES WITH VP 44 FIP & VE 6 FIP ONLY.	CONSISTS OF: 64.02511-0001 PISTON – 06 No 64.02502-0147 PISTON PIN – 06 No 64.90820-0019 CIRCLIP - 12 No
3	64.02511-7002	PISTON KIT (2 VCR)	1	FOR MODELS WITH 2 VCR ENGINES ONLY	CONSISTS OF : 64.02511-0008 PISTON (2VCR) – 6 No 64.02502-0147 PISTON PIN – 6 No 64.90820-0019 CIRCLIP - 12 No
4	64.02511-7003	PISTON KIT	1	FOR MODELS WITH 220 HP BS III ENGINES WITH VE 6 FIP ONLY.	CONSISTS OF : 64.02511-0009 PISTON – 6 No 64.02502-0147 PISTON PIN – 6 No 64.90820-0019 CIRCLIP – 12 No (PISTON KIT TO BE USED IN 220 HP BSIII ENGINESWITH VE6 FIP FROM VIN CUT OFF No : MBKMC5BT8EN013235)
5	64.02511-7101	PISTON KIT	1	FOR MODELS WITH 180 HP ENGINES ONLY	CONSISTS OF : 64.02511-0001 PISTON – 4 No 64.02502-0147 PISTON PIN – 4 No 64.90820-0019 CIRCLIP - 8 No
6	64.02410-7001	CONNECTING BEARING KIT	1	COMMON FOR ALL MODELS EXCEPT MODELS WITH 180 HP ENGINES	CONSISTS OF : 51.02410-0646 CONNECTING BEARING UPPER – 6 No 51.02410-0645 CONNECTING BEARING LOWER – 6 No
7	64.02410-7101	CONNECTING BEARING KIT	1	COMMON FOR MODELS WITH 180 HP ENGINES ONLY	CONSISTS OF : 51.02410-0646 CONNECTING BEARING UPPER - 4 No

					51.02410-0645 CONNECTING BEARING LOWER - 4 No
8	64.02503-7001	PISTON RING KIT	1	COMMON FOR ALL MODELS WITH 280 & 220 HP ENGINES	CONSISTS OF: 64.02503-0002 KEYSTONE RING – 6 No 64.02503-0003 TAPER RING – 6 No 64.02503-0004 OILCONTROLRING - 6 No
9	64.02503-7101	PISTON RING KIT	1	COMMON FOR MODELS WITH 180 HP ENGINES ONLY	CONSISTS OF: 64.02503-0002 KEYSTONE RING – 4 No 64.02503-0003 TAPER RING - 4 No 64.02503-0004 OILCONTROLRING – 4 No
10	64.01113-7005	MAIN BEARING KIT	1	COMMON FOR ALL MODELS WITH 280 & 220 HP ENGINES	CONSISTS OF : 64.01113-0001 MAIN BEARING UPPER – 7 No 64.01113-0002 MAIN BEARING LOWER – 7 No 64.01114-0002 THRUSTWASHER UPPER – 2 No 64.01114-0001 THRUST WASHER LOWER – 2 No
11	64.01113-7105	MAIN BEARING KIT	1	COMMON FOR MODELS WITH 180 HP ENGINES ONLY	CONSISTS OF : 64.01113-0001 MAIN BEARING UPPER – 5 No 64.01113-0002 MAIN BEARING LOWER – 5 No 64.01114-0002 THRUSTWASHER UPPER – 2 No 64.01114-0001 THRUST WASHER LOWER – 2 No
12	64.04101-7001	INTAKE VALVE KIT	1	COMMON FOR ALL MODELS WITH 280 & 220 HP ENGINES	CONSISTS OF : 64.04101-0001 INTAKE VALVE - 6 No
13	64.04101-7101	INTAKE VALVE KIT	1	COMMON FOR MODELS WITH 180 HP ENGINES ONLY	CONSISTS OF : 64.04101-0001 INTAKE VALVE - 4 No
14	64.04101-7002	EXHAUST VALVE KIT	1	COMMON FOR ALL MODELS WITH 280 & 220 HP ENGINES	CONSISTS OF : 64.04101-0002 EXHAUST VALVE - 6 No
15	64.04101-7102	EXHAUST VALVE KIT	1	COMMON FOR MODELS WITH 180 HP ENGINES ONLY	CONSISTS OF : 64.04101-0002 EXHAUST VALVE - 4 No
16	64.04401-7002	CAMSHAFT BUSH KIT	1	COMMON FOR ALL MODELS WITH 280 & 220 HP ENGINES	CONSISTS OF : 64.04401-0002 CAMSHAFT BUSH - 6 No 64.04410-1002 CAMSHAFT BUSH - 1 No
17	64.04401-7102	CAMSHAFT BUSH KIT	1	COMMON FOR MODELS WITH 180 HP ENGINES ONLY	CONSISTS OF : 64.04401-0002 CAMSHAFT BUSH - 4 No

					64.04410-1002 CAMSHAFT BUSH - 1 No
18	64.01601-7001	PISTON COOLING NOZZLE KIT	1	FOR 280 & 220 HP ENGINES	CONSISTS OF : 51.01601-5065 PISTON COOLING NOZZLE - 6 No 06.31630-0311 BALL - 6 No 64.05405-5001 OIL PRESSURE VALVE - 6 No 64.90801-0009 SPRING WASHER - 6 No
19	64.01601-7101	PISTON COOLING NOZZLE KIT	1	COMMON FOR MODELS WITH 180 HP ENGINES ONLY	CONSISTS OF : 51.01601-5065 PISTON COOLING NOZZLE - 4 No 06.31630-0311 BALL - 4 No 64.05405-5001 OIL PRESSURE VALVE - 4 No 64.90801-0009 SPRING WASHER - 4 No
20	64.12501-7018	FILTER KIT	1	900 HRS / 180 DAYS SERVICE KIT FOR TIPPER APPLICATION WITH VE 6 BS III ENGINES	CONSISTS OF : 51.12503-0072 EXPENDABLE FUEL FILTER – 2 No 64.05501-7227 SPINON FILTER (OIL) – 1 No 64.12501-7012 SPINON FILTER WITH GASKETS (W/SEP) - 1 No
21	64.12501-7019	FILTER KIT	1	900 HRS / 180 DAYS SERVICE KIT FOR TIPPER APPLICATION WITH 2 VCR ENGINES	CONSISTS OF : 51.12503-0061 FUEL FILTER CARTRIDGE WITH O RING – 1 No 64.12501-7009 REPLACEMENT ELEMENT (W /SEP) - 1 No
22	64.12501-7020	FILTER KIT	1	900 HRS / 365 DAYS SERVICE KIT FOR TIPPER APPLICATION WITH 2 VCR ENGINES	CONSISTS OF : 51.12503-0061 FUEL FILTER CARTRIDGE WITH O RING – 1 No 64.12501-7009 REPLACEMENT ELEMENT (W/ SEP) - 1 No 64.05501-7227 SPINON FILTER (OIL) – 1 No
23	64.12501-7021	FILTER KIT	1	(900 HRS / 180 DAYS) SERVICE KIT FOR TIPPER APPLICATION WITH VP 44 ENGINES	CONSISTS OF : 51.12503-0072 EXPENDABLE FUEL FILTER – 2 No 64.05501-7001 SPINON FILTER (OIL) – 1 No 85.12501-0002 FUEL FILTER RME RESISTANT – 1 No
24	64.00900-6003	D0836LFL13 ENGINE OH MAJOR KIT	1	FOR 2 VCR ENGINES ONLY	
25	64.00900-6002	D0836LFL13 ENGINE OH MINOR KIT	1	FOR 2 VCR ENGINES ONLY	

ENGINE BS IV WITH 4VCR

ENGINE ASSEMBLY **Diagram No. 111**

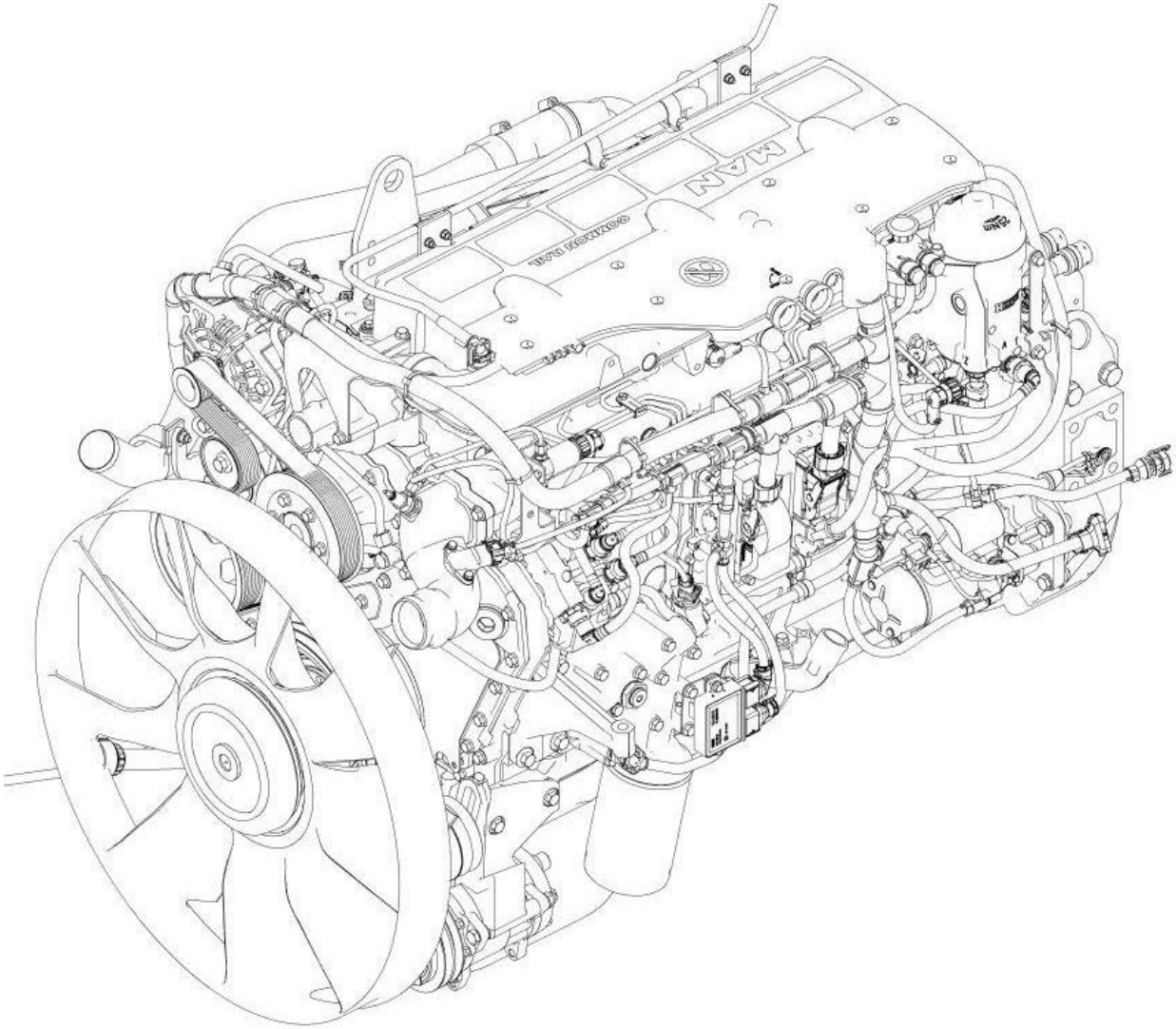

ENGINE ASSEMBLY

Diagram No. 111

S R	PART NO.	DESCRIPTION	QTY	APPLICABLE MODEL	REMARKS
1	64.00010-6115	ENGINE D0836LF22	1	FOR 16.300 WITH ALLISON TM ONLY.	
1	64.00010-6103	ENGINE D0836LF20 WITH SAE1 AC	1	FOR 25.300 TP & 16.300 TP SAE 1 WITH AC	

CRANKCASE 6 CYLINDER ENGINE **Diagram No. 112**

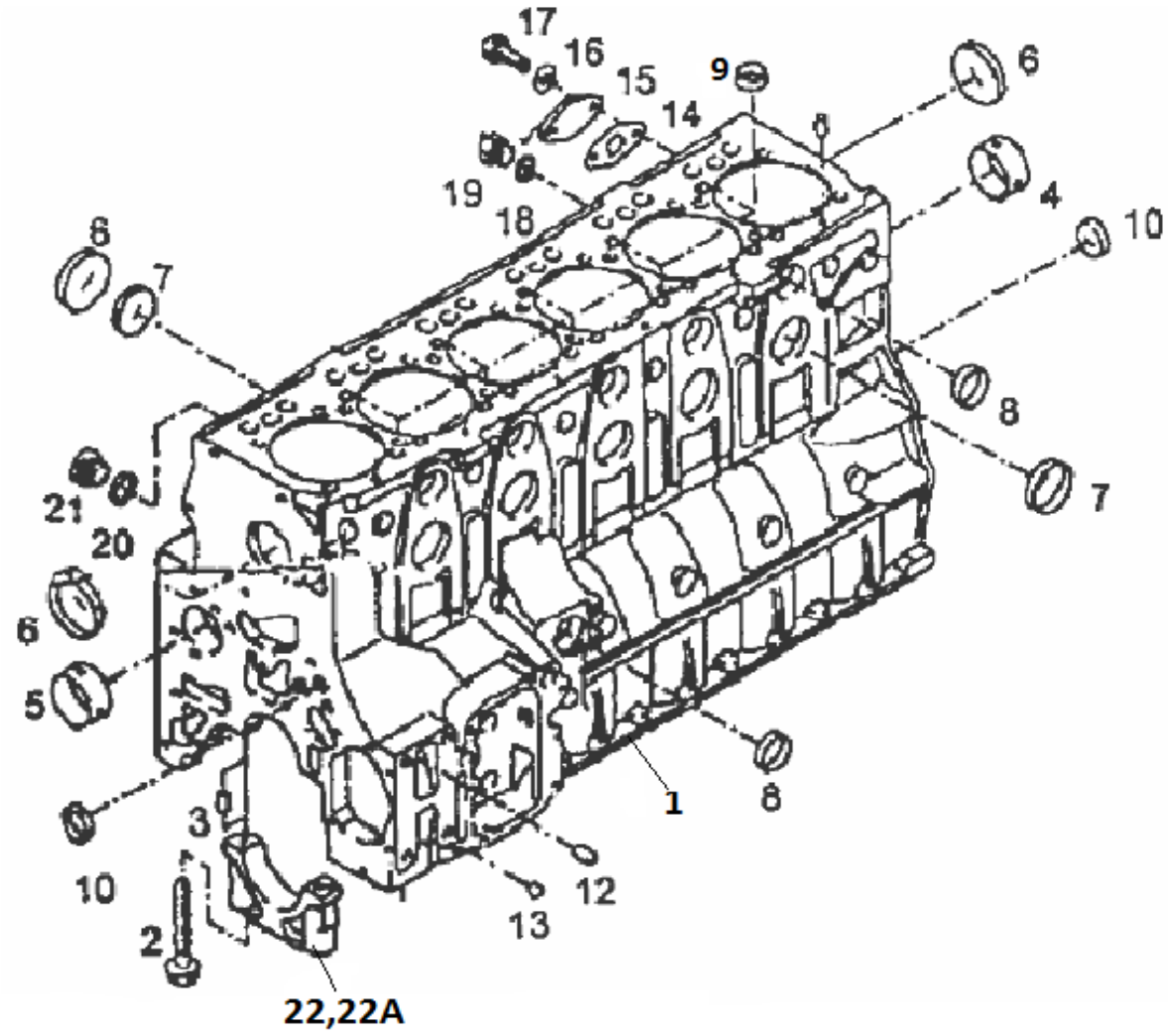

CRANKCASE 6 CYLINDER ENGINE

Diagram No. 112

SR	PART NO.	DESCRIPTION	QTY	APPLICABLE MODEL	REMARKS
1	64.01102-6523	CYLINDER BLOCK ASSLY D0836	1		
2	51.90020-0352	HEX HD COLLER SCREW	14		
3	64.91301-0005	CYLINDRICAL PIN	6		
4	64.04401-0002	CAM SHAFT BEARING BUSH	6		
5	64.04410-1002	CAM SHAFT BEARING BUSH	1		
6	64.91606-0005	SEALING CAP DIA 62.15	8		
7	64.91606-0004	SEALING CAP DIA 50.15	11		
8	64.91606-0002	SEALING CAP DIA 40.15	6		
9	64.91606-0006	SEALING CAP B16 X5CRNI 1810 DIN 443	10		
10	64.91606-0007	SEALING CAP B20 X5CRNI 1810 DIN 443	2		
12	64.90490-0060	SEALING PLUG G8 M655 (AVSEAL-II)	1		
13	64.96481-0003	BALL 6.35G20P2 DIN 5401	1		
14	64.96601-0001	GASKET (TURBO DRAIN PIPE)	1		
15				PART NSSP	NOT APPLICALE
16				PART NSSP	NOT APPLICALE
17				PART NSSP	NOT APPLICALE
18	64.96501-0047	SEALING WASHER BS-14,7X22,0-ST	1		

CRANKCASE 6 CYLINDER ENGINE

Diagram No. 112

S R	PART NO.	DESCRIPTION	QTY	APPLICABLE MODEL	REMARKS
19	64.90490-0041	LOCKING BOLT A-M14X1.5-ST-A3C	1	PART NOT USED	
20	06.56631-0114	SEALING WASHER BS-31X39-ST	2		
21	64.90490-0036	LOCKING SCREW M30X1.5-ST ZNPHR3F	2		
22	64.01105-1001	BEARING CAP FOR CRANKCASE	6		
22A	64.01105-1002	BEARING CAP FOR CRANK CASE	1		

CYLINDER LINER **Diagram No. 113**

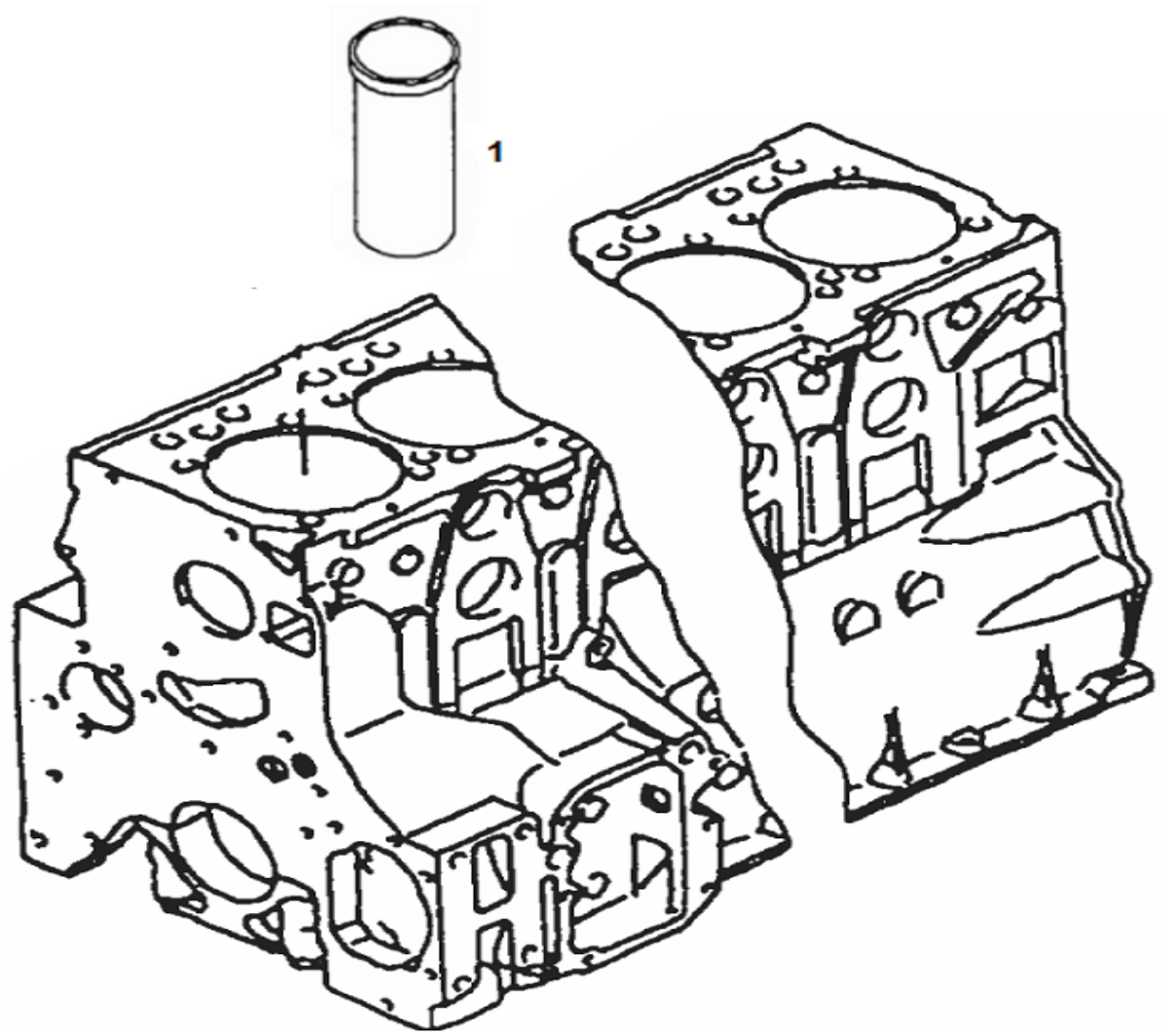

CYLINDER LINER

Diagram No. 113

S R	PART NO.	DESCRIPTION	QTY	APPLICABLE MODEL	REMARKS
1	64.01201-0001	CYLINDER LINER	6		

ENGINE BREATHER **Diagram No. 114**

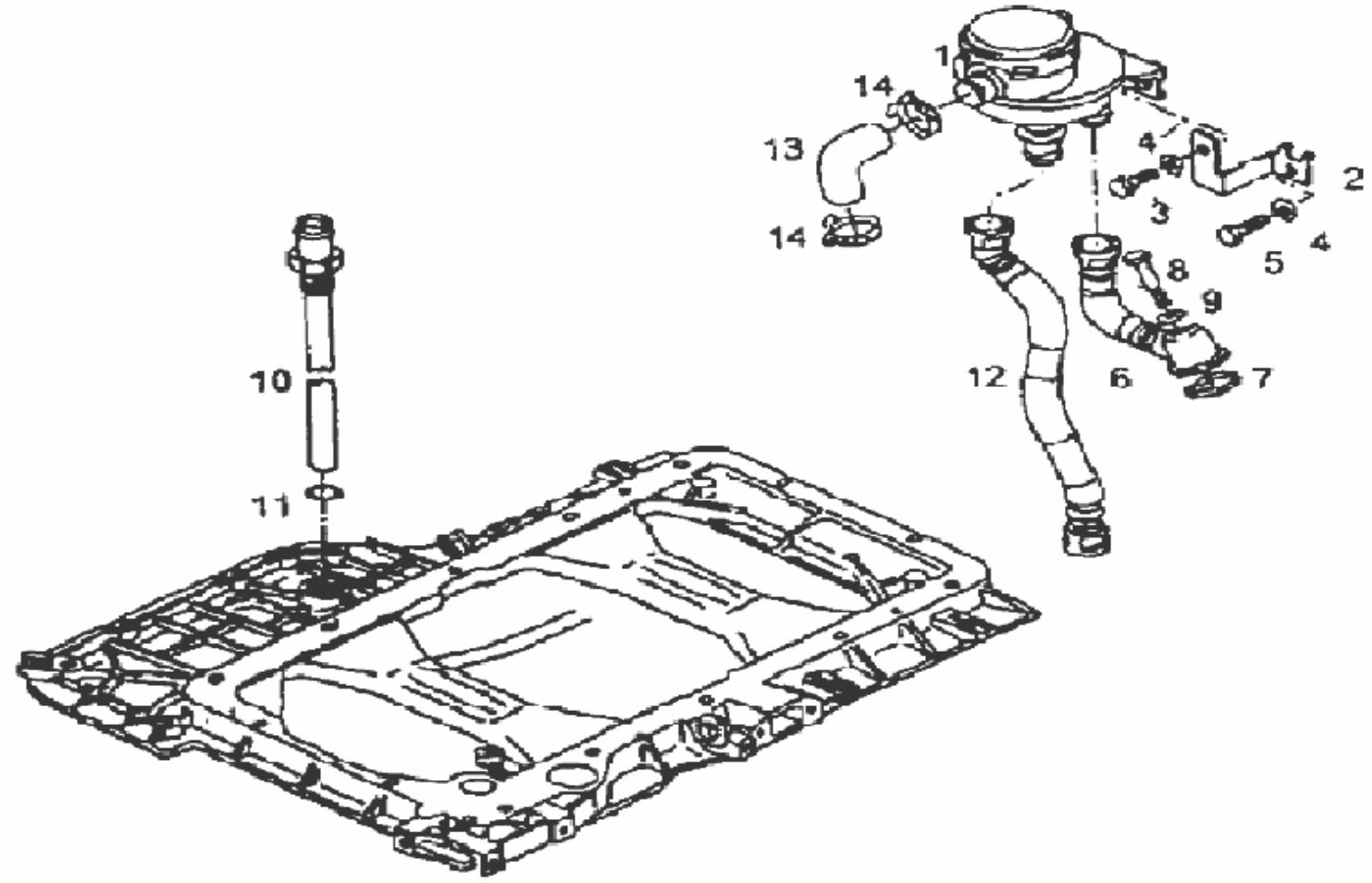

ENGINE BREATHER

Diagram No. 114

SR	PART NO.	DESCRIPTION	QTY	APPLICABLE MODEL	REMARKS
1	64.01804-0001	OIL SEPARATOR WITH PR. RELIEF VALVE	1		
2	64.01840-0105	BRACKET OIL SEPARATOR	1	FOR 300 HP BS IV ENGINES ONLY	
3	64.90020-0092	HHS M8X16 DIN 933-8.8 BTS:170102.20	1		
4	64.90710-0026	PL WASHER A8.4 DIN125-ST BTS170202.12	2		
5	64.90020-0093	HHS M8 X20 DIN 933-8.8 BTS:170102.20	1		
6	51.01802-5518	BLEEDER PIPE	1		
7	64.96501-0032	O RING 32X2.5 B-ACM 1-60 M7.660.60	1		06.56332-2167 ALTERNATE
8	64.90020-0301	HEX SCREW M8X85-8.8 MAN183 PHR DIN 931	1		
9	06.56631-0125	SEALING RING BS-8.7X14.0-ST /FPM 1-80	1		
10	64.05702-0002	OIL RETURN PIPE IN OIL SUMP	1		
11	64.96501-0062	O RING 25X2.5-FPM 1-70 MAN 356	1		06.56936-1300 ALTERNATE
12	64.01802-0495	BREATHER PIPE	1		
13	64.96301-0001	RUBBER ELBOW HOSE	1		
14	64.97445-0023	SPRING BAND CLAMP 35X12	2	FOR 300 HP BS IV ENGINES ONLY	

FLYWHEEL HOUSING

Diagram No. 115

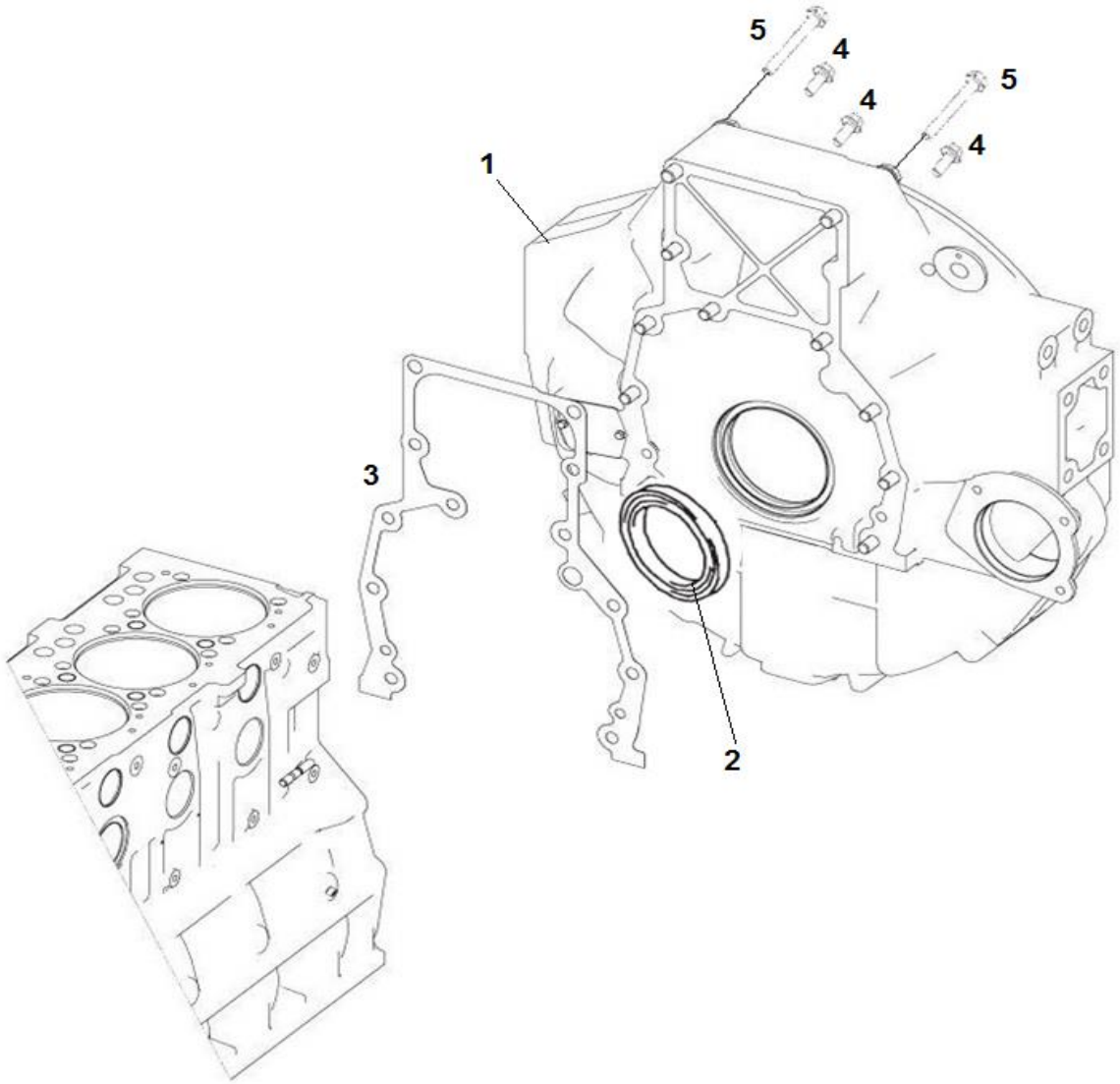

FLYWHEEL HOUSING

Diagram No. 115

S R	PART NO.	DESCRIPTION	QTY	APPLICABLE MODEL	REMARKS
1	64.01401-5501	FLYWHEEL HOUSING	1	FOR 300 HP BS IV ENGINES WITH 430 DIA CLUTCH	
2	64.01510-0003	OIL SEAL REAR (FLYWHEEL END)	1		
3	64.01904-0001	GASKET FOR FLYWHEEL HOUSING	1	FOR 300 HP BS IV ENGINES WITH 430 DIA CLUTCH	
4	64.90030-0002	FLANGE BOLT M12X30 DIN6921-10.9 PHR	9		
5	64.90020-0139	HHS M14X105-8.8 MAN183 PHR DIN 931	2		

TIMING CASE & MOUNTING

Diagram No. 116

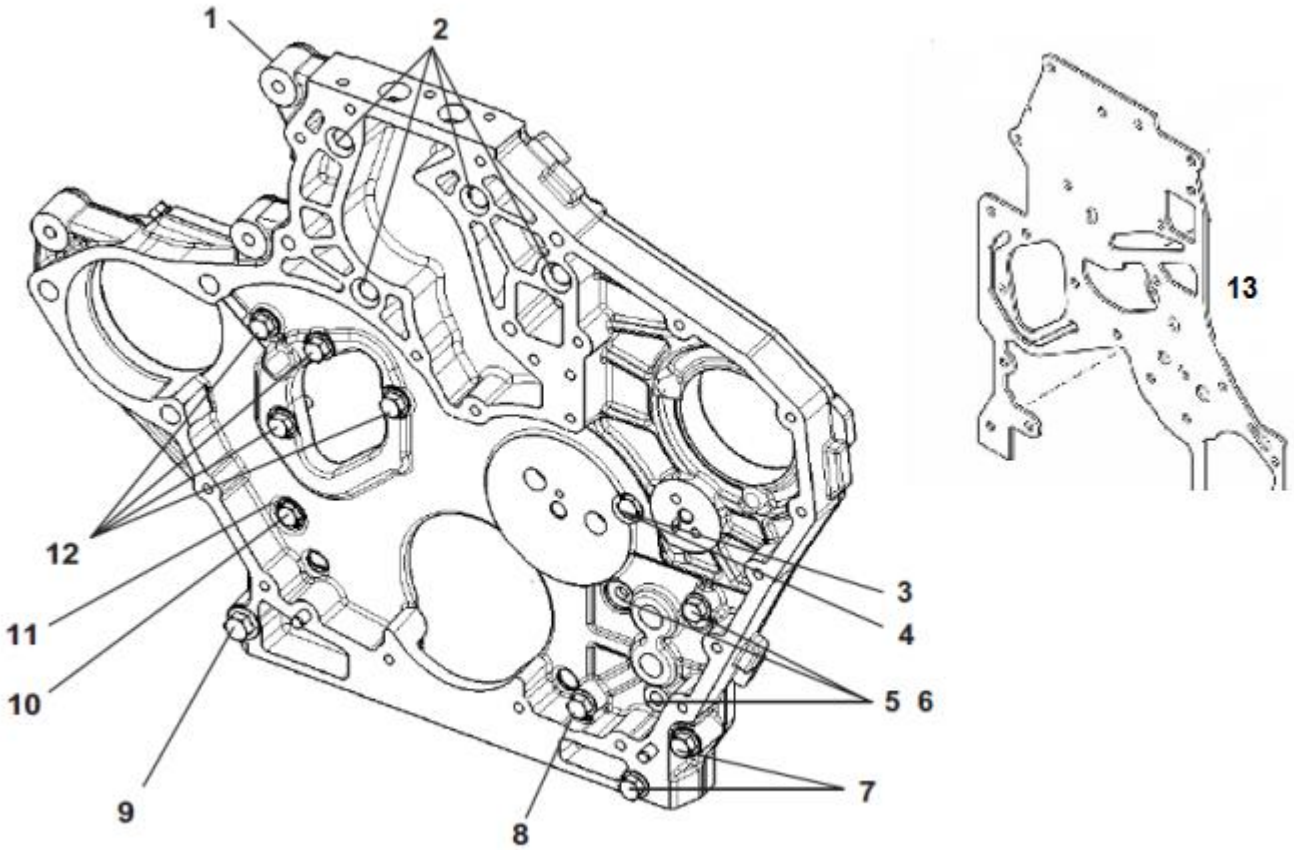

TIMING CASE & MOUNTING

Diagram No. 116

SR	PART NO.	DESCRIPTION	QTY	APPLICABLE MODEL	REMARKS
1	64.01304-4003	ASSY TIMING GEAR CASE	1	FOR 2 VCR & 4 VCR ENGINES ONLY	
2	64.90030-0048	HEX FLANGE BOLT M8X35	4	FOR 2 VCR & 4 VCR ENGINES ONLY	
3	64.90030-0051	FLANGE BOLT M8X45-10.9 MAN183-B1 DIN6921	2	FOR 2 VCR & 4 VCR ENGINES ONLY	
4	64.90710-0077	WASHER 8.4 DIN125-200HV MAN183-B1	1	FOR 2 VCR & 4 VCR ENGINES ONLY	
5	64.90020-0229	HEX SCREW M8X20-10.9-MAN183 PHR DIN 933	3	FOR 2 VCR & 4 VCR ENGINES ONLY	
6	64.90710-0077	WASHER 8.4 DIN125-200HV MAN183-B1	3	FOR 2 VCR & 4 VCR ENGINES ONLY	
7	64.90030-0051	FLANGE BOLT M8X45-10.9 MAN183-B1 DIN6921	2	FOR 2 VCR & 4 VCR ENGINES ONLY	
8	64.90030-0048	HEX FLANGE BOLT M8X35 DIN 6921	2	FOR 2 VCR & 4 VCR ENGINES ONLY	
9	64.90030-0050	FLANGE BOLT M10X50-10.9 PHR DIN6921	1	FOR 2 VCR & 4 VCR ENGINES ONLY	
10	64.90020-0398	HEX SCREW M8X18 DIN 933-10.9 PHR	1	FOR 2 VCR & 4 VCR ENGINES ONLY	
11	64.90710-0077	WASHER 8.4 DIN125-200HV MAN183-B1	1	FOR 2 VCR & 4 VCR ENGINES ONLY	
12	64.90030-0049	FLANGE BOLT M8X25-10.9 MAN183-B1 DIN6921	4	FOR 2 VCR & 4 VCR ENGINES ONLY	
13	64.01903-0002	GASKET- TIMING CASE	1	FOR 2 VCR & 4 VCR ENGINES ONLY	

OIL SPRAYER NOZZLE

Diagram No. 117

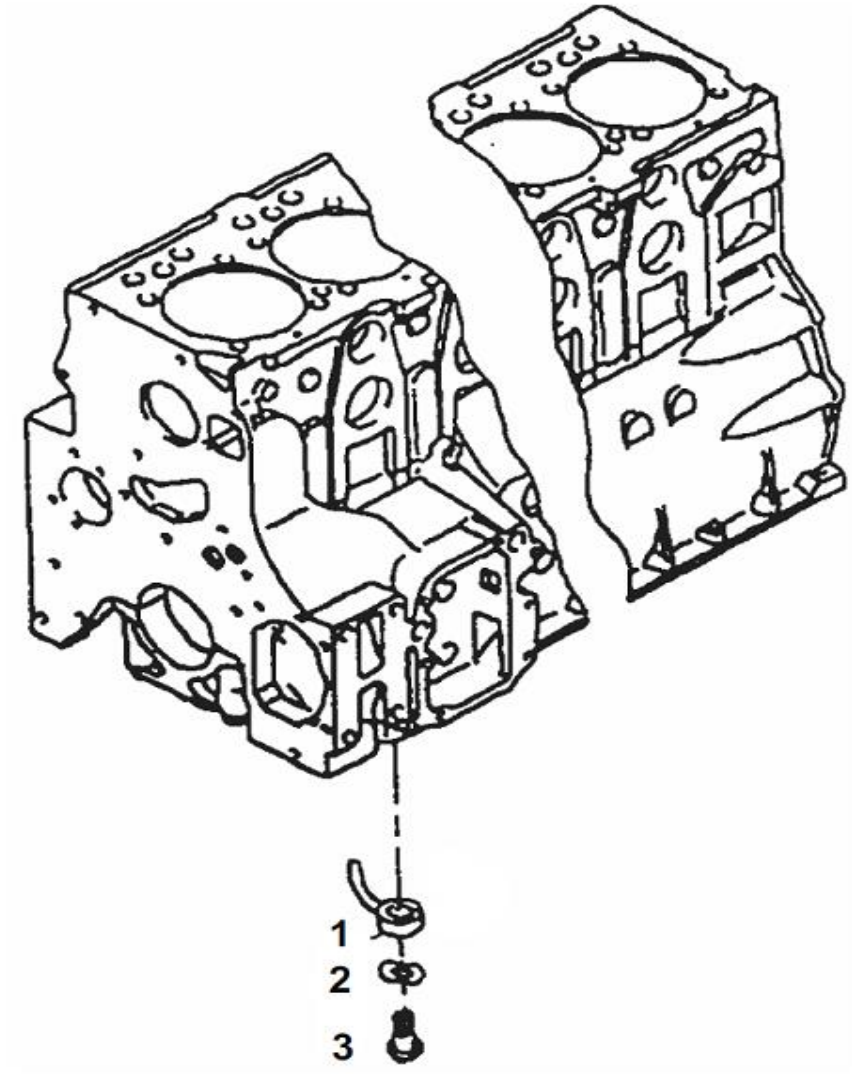

OIL SPRAYER NOZZLE

Diagram No. 117

SR	PART NO.	DESCRIPTION	QTY	APPLICABLE MODEL	REMARKS
1	51.01601-5097	PISTON COOLING NOZZLE ASSY	6	COMMON FOR ALL MODELS	
2	64.90801-0009	SPRING WASHER B12-ZNPHR3F DIN 137	6	COMMON FOR ALL MODELS	
3	64.05405-5001	OIL PRESSURE VALVE D02/D08	6	COMMON FOR ALL MODELS	

TIMING GEARS **Diagram No. 118**

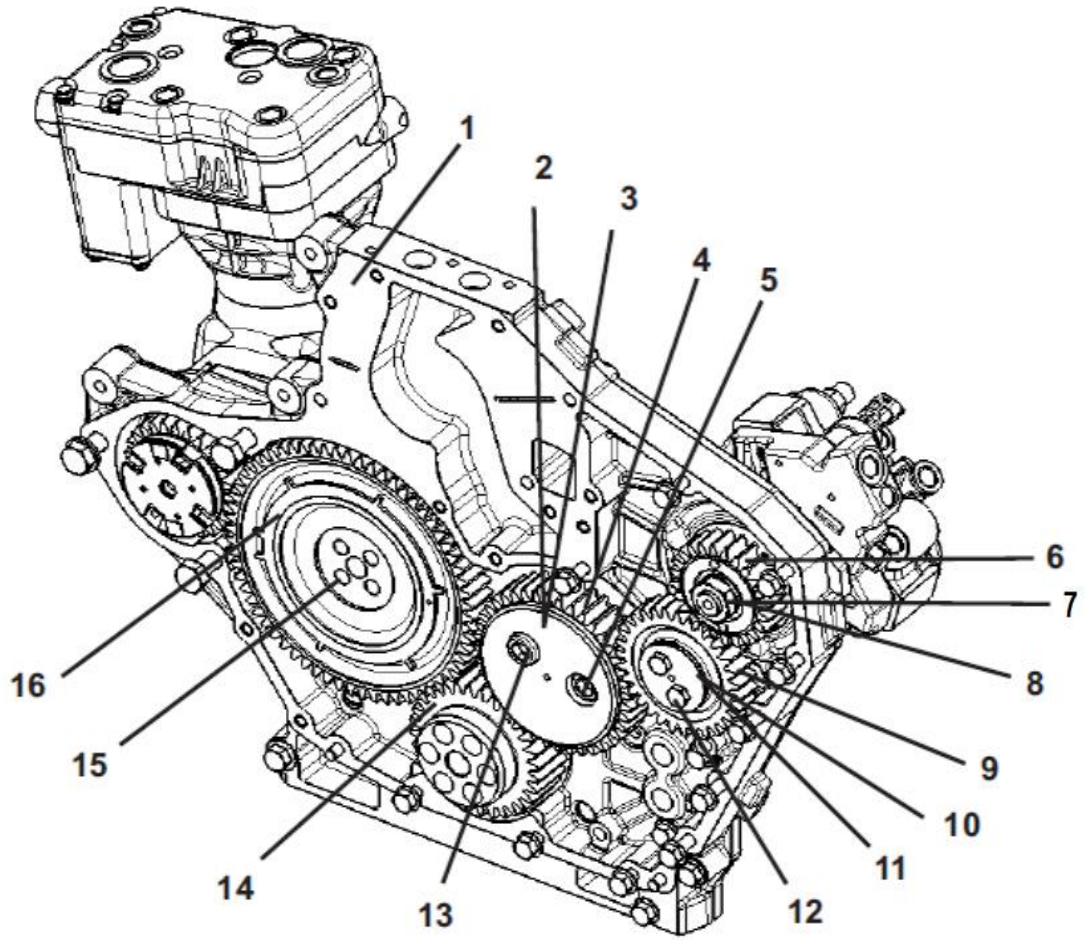

TIMING GEARS

Diagram No. 118

SR	PART NO.	DESCRIPTION	QTY	APPLICABLE MODEL	REMARKS
1	51.01903-0322	GASKET FOR TIMING COVER	1		
2	51.93020-1073	BUSH FOR INTERMEDIATE GEAR 1	1		
3	64.04506-0115	HUB – INTERMEDIATE GEAR 1	1		64.04506-0005 ALTERNATE
4	64.04505-5002	INTERMEDIATE GEAR 1- ASSLY	1	INCLUDES SR NO 2	
5	06.02099-0411	SCREW M14X1.75X60-8.8 PHR DIN 912	1		
6	64.11301-0276	F I P DRIVE GEAR	1		
7	64.90501-0040	HEX NUT	1		
8	64.90710-0008	WASHER	1		
9	64.04505-5157	INTERMEDIATE GEAR 2- ASSLY	1	INCLUDES SR NO 11	
10	64.11302-0060	INTERMEDIATE GEAR SHAFT 2	1		64.11302-0001 ALTERNATE
11	51.93020-1070	BUSH FOR INTERMEDIATE GEAR 2	1		
12	64.90020-0100	HHS M8 X 40 DIN 933 – 8.8 BTS 170102.20	2		
13	06.02099-0365	SCREW M14X1.75X45-8.8 ZNPHR3F DIN 912	1		64.90030-0001 ALTERNATE
14	64.02115-0277	CRANKSHAFT GEAR	1		
15	64.90020-0001	HEX COLLAR SCREW M10X1.25X38	4		
16	64.04501-5025	ASSLY CAMSHAFT GEAR	1		64.04501-5001 ALTERNATE

TIMING COVER & MOUNTING

Diagram No. 119

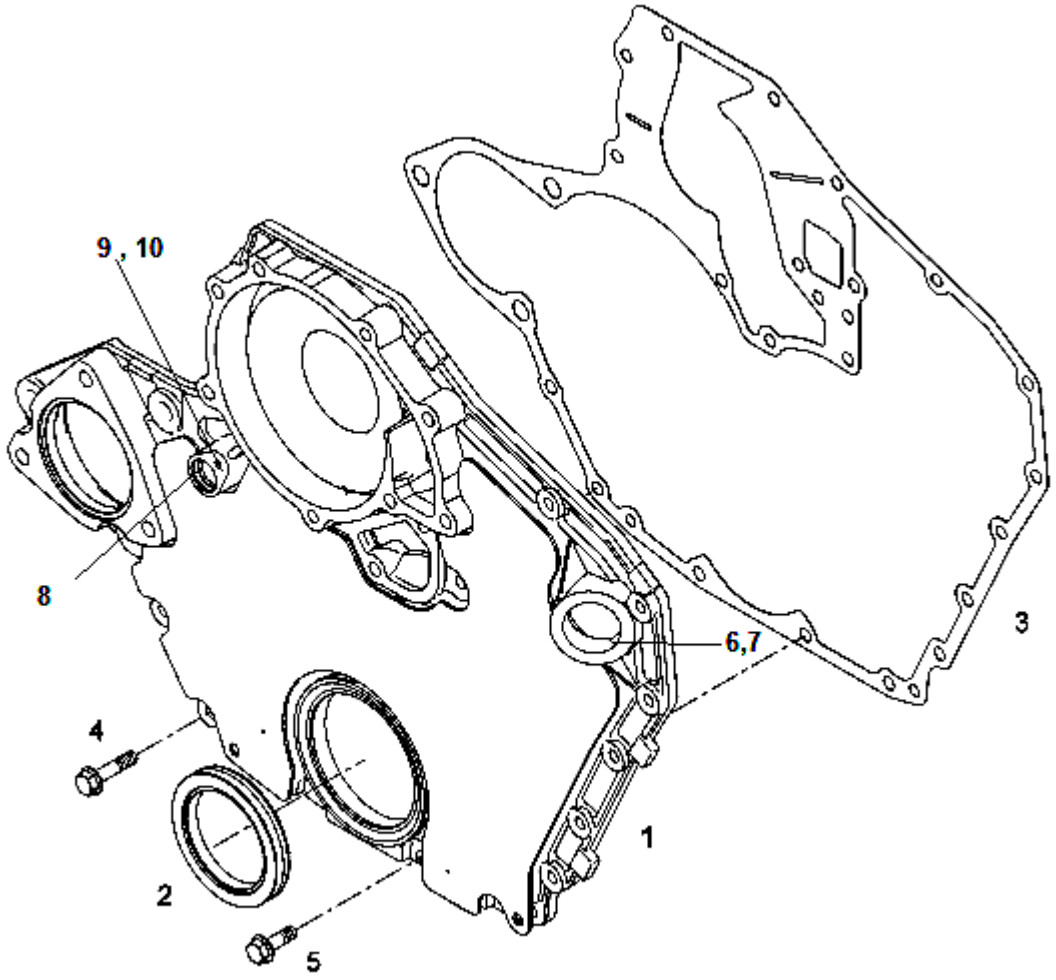

TIMING COVER & MOUNTING

Diagram No. 119

SR	PART NO.	DESCRIPTION	QTY	APPLICABLE MODEL	REMARKS
1	51.01305-5144	TIMING COVER M/C	1		SUPERCEDED BY 51.01305-5154
2	64.01510-0004	OIL SEAL – FRONT	1		
3	51.01903-0322	GASKET FOR TIMING COVER	1		
4	64.90030-0048	HEX FLANGE BOLT M8X35 DIN 6921	8		
5	64.90030-0049	FLANGE BOLT M8X25-10.9 MAN183-B1	3		
6	64.90490-0038	CLOSING PLUG M38X1.5-ST-A3C DIN 7604	1		
7	64.91710-0029	SEALING RING A38X44-CU DIN 7603	1		
8	51.27120-7038	CAM SHAFT PHASE SENSOR	1		
9	64.90020-0176	HEX. SCREW M6X16 DIN 933-8.8	1		
10	64.90710-0074	WASHER A6.4X12X1.6-200HV	1		06.15013-0409 ALTERNATE

CONNECTING ROD

Diagram No. 120

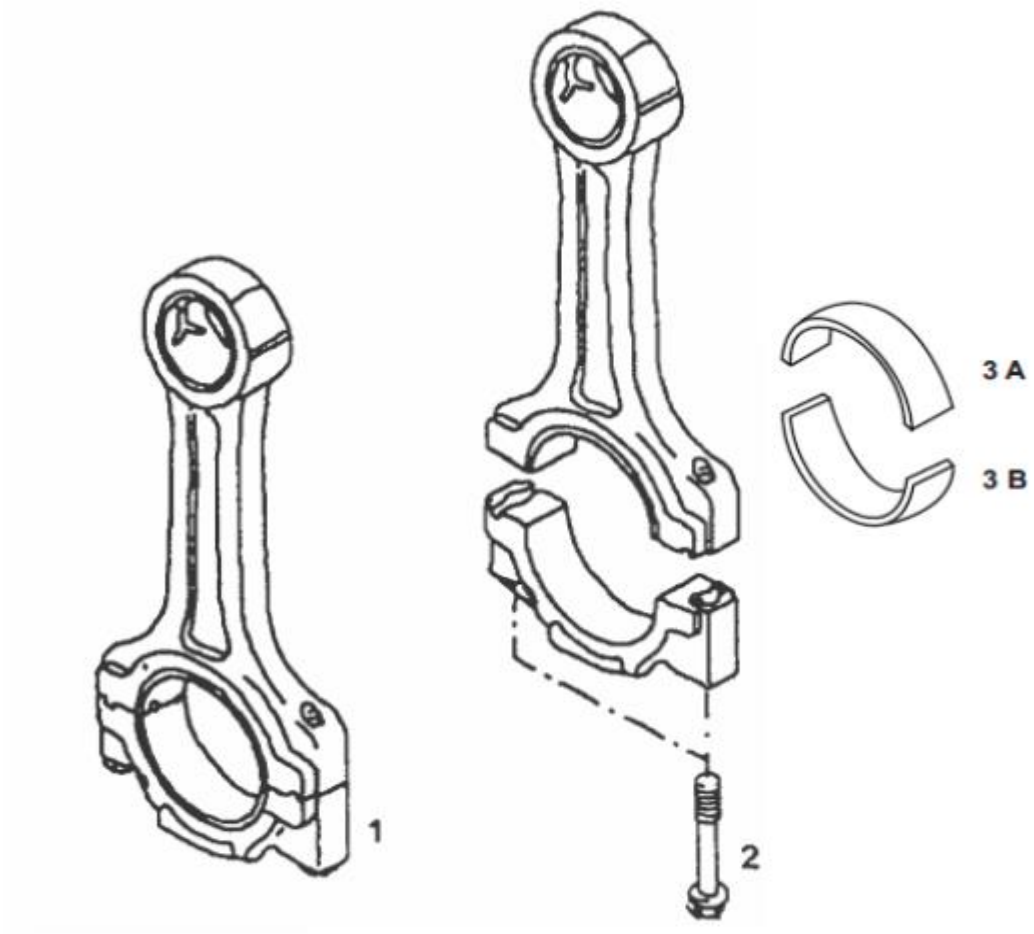

CONNECTING ROD

Diagram No. 120

SR	PART NO.	DESCRIPTION	QTY	APPLICABLE MODEL	REMARKS
1	64.02400-6001	CONNECTING ROD ASSEMBLY (CRACKED)	6		SUPERCEDED BY 64.02400-6203
-	64.02405-1001	CONN ROD BUSH	6		
2	64.90490-0165	CONN ROD BOLT	12		
-	64.02410-7001	CONN ROD BEARING SET NORMAL – 6 CYL	1	INCLUDES SR 3A & 3B	
3A	51.02410-0646	CONNECTING ROD BEARING – UPPER	6		
3B	51.02410-0645	CONNECTING ROD BEARING LOWER	6		

CRANKSHAFT **Diagram No. 121**

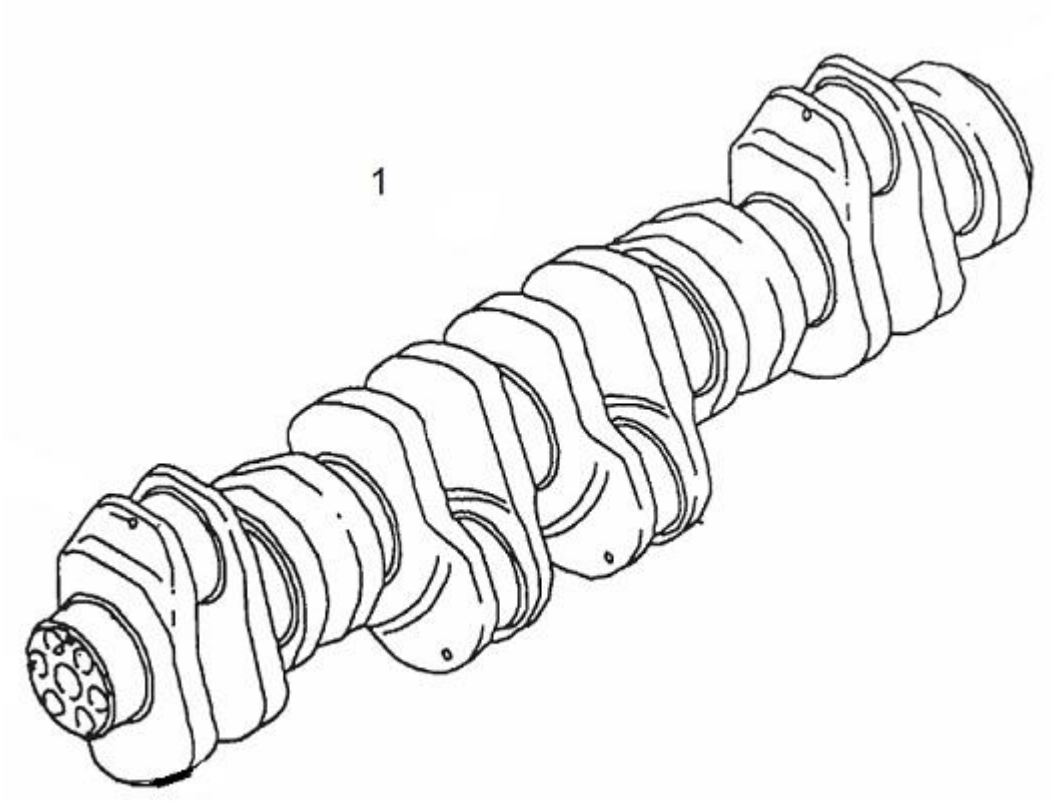

CRANKSHAFT

Diagram No. 121

SR	PART NO.	DESCRIPTION	QTY	APPLICABLE MODEL	REMARKS
1	64.02101-6001	CRANKSHAFT ASSEMBLY WITH PLUG	1		64.02101-6152 ALTERNATE

FLYWHEEL WITH MOUNTING PARTS

Diagram No. 122

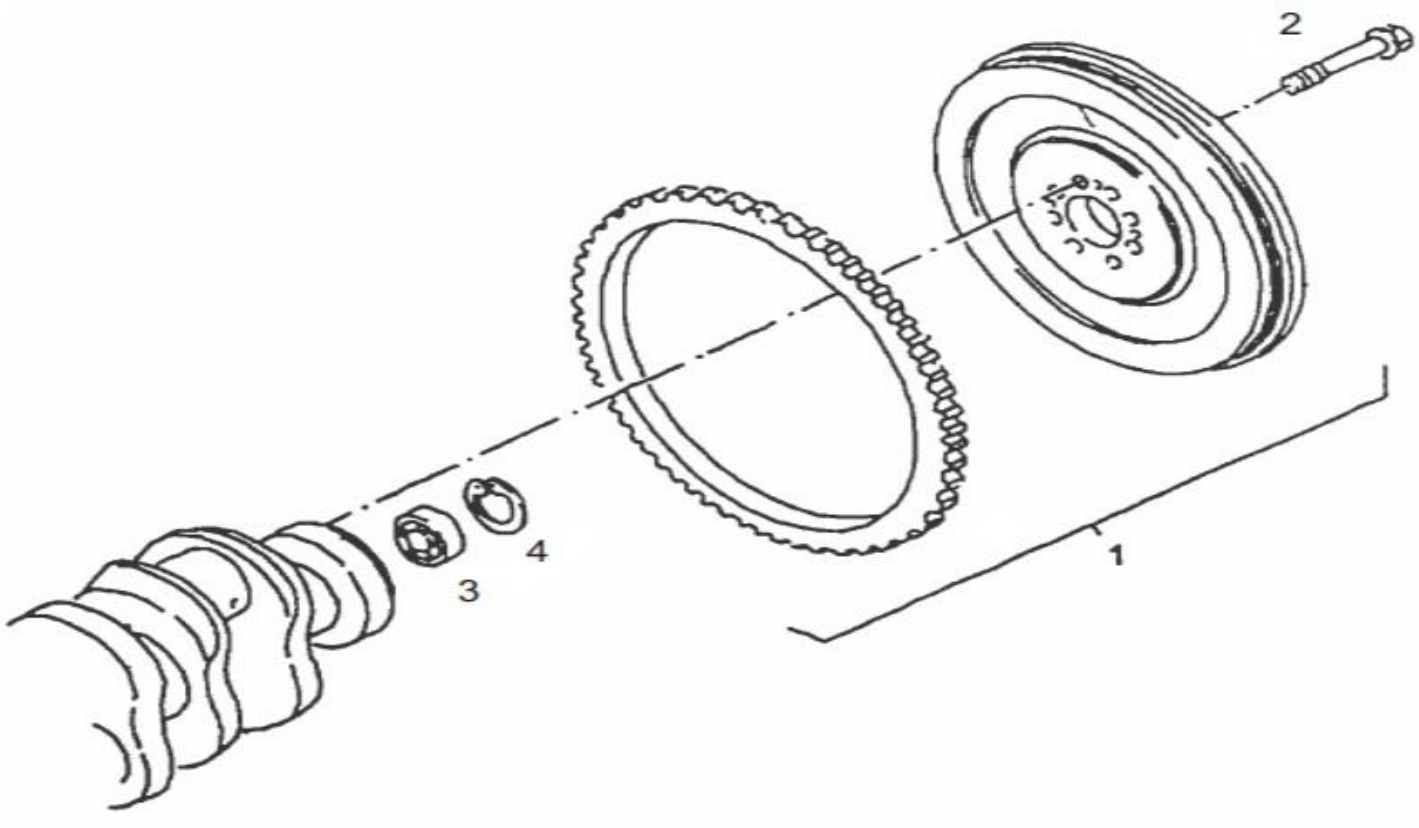

FLYWHEEL WITH MOUNTING PARTS

Diagram No. 122

SR	PART NO.	DESCRIPTION	QTY	APPLICABLE MODEL	REMARKS
1	64.02301-5364	FLYWHEEL SAE 1 ASSEMBLY	1	FOR 2 VCR & 4 VCR ENGINES WITH 430 DIA CLUTCH	
1	51.02301-5255	FLYWHEEL SAE2 WITH RING GEAR	1	FOR 16.300 WITH ALLISON AUTO TM	
2	51.90020-0353	BOLT M14X1.5X66 – 10.9 DIN 961	8	FOR 16.300 WITH ALLISON AUTO TM	
2	64.90020-0002	HEX HEAD COLLER SCREW M14X1.5X40	8	FOR 2 VCR & 4 VCR ENGINES WITH 430 DIA CLUTCH.	51.90020-0344 ALTERNATE
3	64.93410-0001	DEEP GROOVE BALL BEARING	1	FOR 2 VCR & 4 VCR ENGINES WITH 430 DIA CLUTCH.	
4	64.90820-0023	CIRCLIP 47X1.75-ZNPHR5F DIN 472	1	FOR 2 VCR & 4 VCR ENGINES WITH 430 DIA CLUTCH.	

MOUNTING PARTS FOR CRANKSHAFT WITH MAIN BEARING

Diagram No. 123

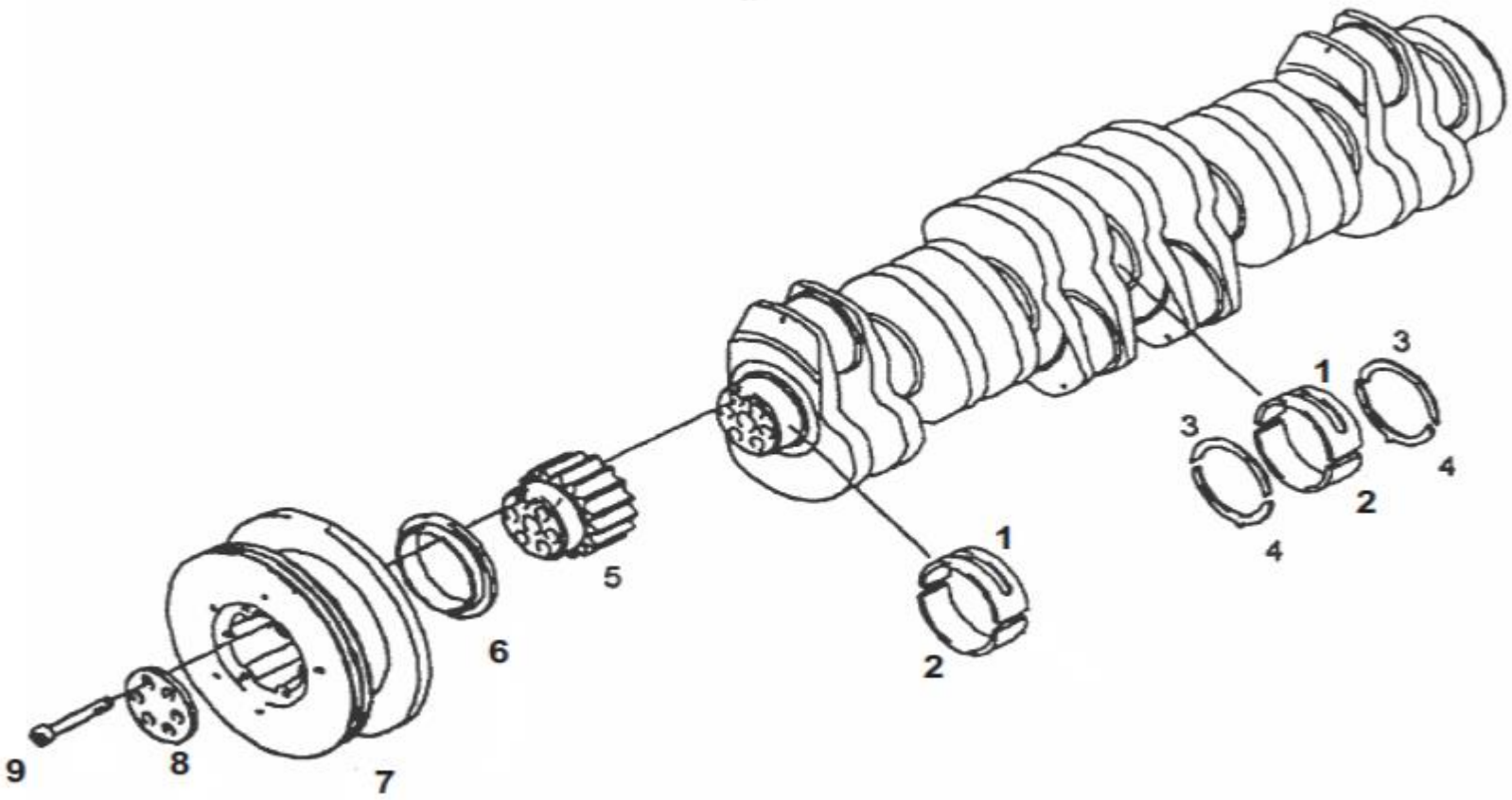

MOUNTING PARTS FOR CRANKSHAFT WITH MAIN BEARING

Diagram No. 123

SR	PART NO.	DESCRIPTION	QTY	APPLICABLE MODEL	REMARKS
A	64.01113-7005	MAIN BEARING & THRUST WASHER KIT	1		CONSISTS OF SR No 1,2,3 & 4
1	64.01113-0001	MAIN BEARING ASSEMBLY UPPER NORMAL	7		
2	64.01113-0002	MAIN BEARING ASSEMBLY LOWER NORMAL	7		
3	64.01114-0002	THRUST WASHER UPPER	2		
4	64.01114-0001	THRUST WASHER LOWER	2		
5	64.02115-0277	CRANKSHAFT GEAR	1		
6	64.01505-0001	SPLASH RING PA6 MAN 318	1		
7	51.02201-0181	VIBRATION DAMPER	1		
8	64.02205-0001	WASHER	1		
9	51.90030-0036	CYLINDRICAL SCREW	6		

PISTON 4 VCR **Diagram No. 124**

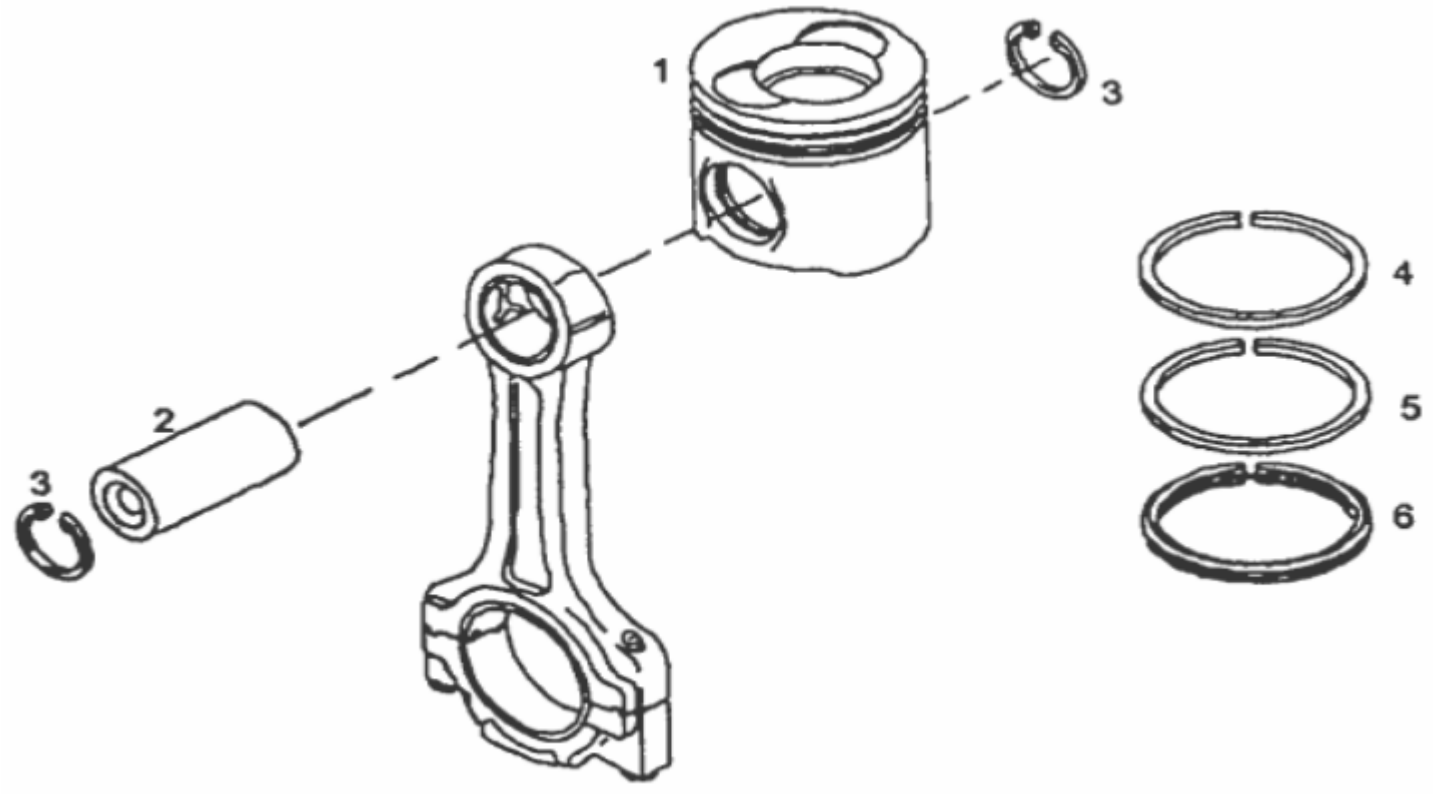

PISTON 4 VCR

Diagram No. 124

SR	PART NO.	DESCRIPTION	QTY	APPLICABLE MODEL	REMARKS
1	64.02511-0831	PISTON	6		
2	64.02502-0147	PISTON PIN.	6		
3	64.90820-0019	CIRCLIP 42X1.75 ZNPHR 5F DIN 472	12		
4	64.02503-0002	KEYSTONE RING	6		
5	51.02503-0866	COMPRESSION RING	6		
6	64.02503-0939	CONFIRMABLE OIL RING	6		
-	64.02503-7001	PISTON RING SET – 6 CYL	1		CONSISTS OF SR 4, 5 & 6.

V- BELT PULLEY ON CRANKSHAFT

Diagram No. 125

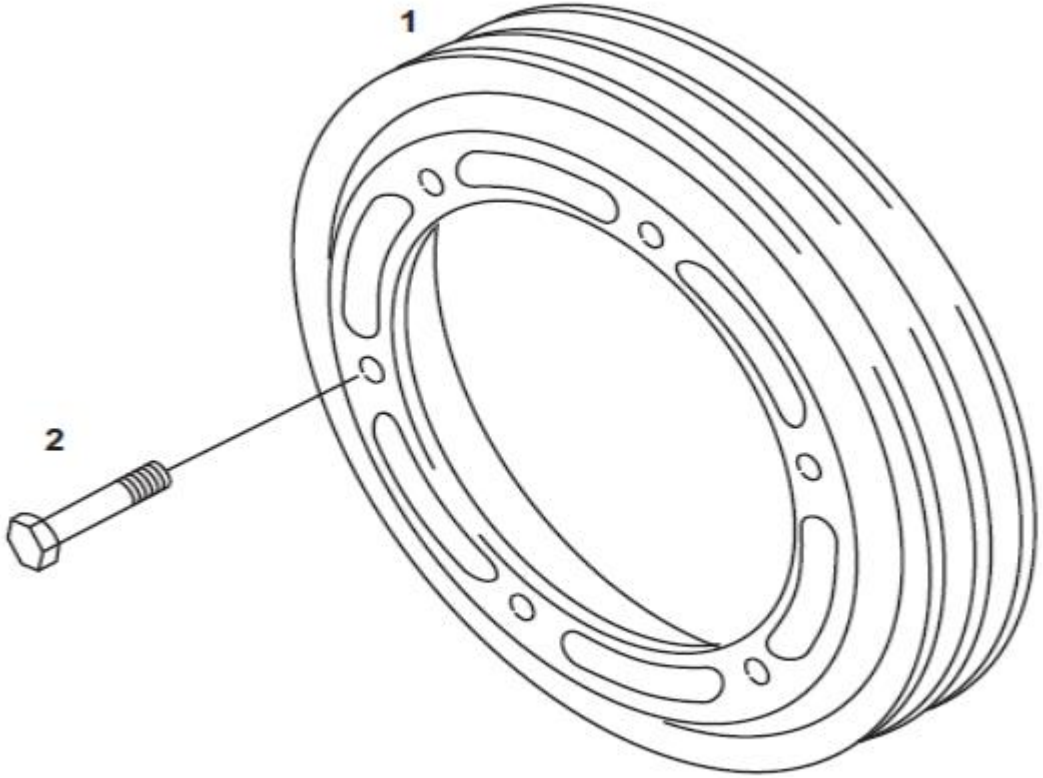

V- BELT PULLEY ON CRANKSHAFT

Diagram No. 125

SR	PART NO.	DESCRIPTION	QTY	APPLICABLE MODEL	REMARKS
1	51.02601-0595	V-BELT PULLEY FOR P T O	1		SUPERCEDED BY 64.02601-0595
2	64.90020-0093	SCREW M8X20-8.8 MAN183-B1 DIN 933	6		

CYLINDER HEAD

Diagram No. 126

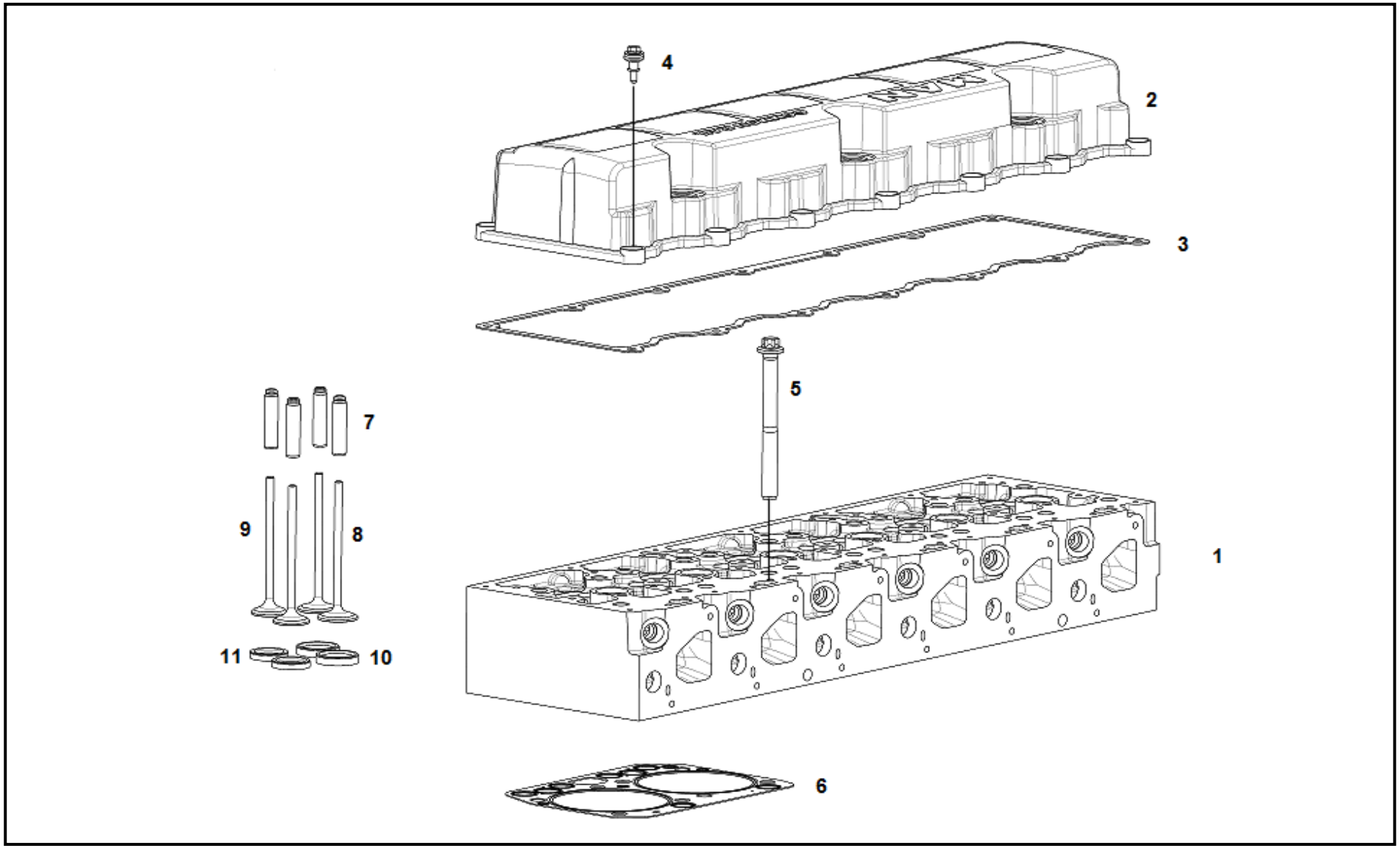

CYLINDER HEAD

Diagram No. 126

SR	PART NO.	DESCRIPTION	QTY	APPLICABLE MODEL	REMARKS
1	51.03100-6273	CYLINDER HEAD ASSY	1		
2	51.03400-6007	CYLINDER HEAD COVER	1		
3	51.03905-0167	CYLINDER HEAD COVER GASKET	1		
4	51.96210-0078	SCREW	14		
5	51.90020-0383	COLLAR BOLT (CYLINDER HEAD)	24		
6	51.03901-0378	CYLINDER HEAD GASKET	3		
7	51.03201-1138	VALVE GUIDE	24		
8	64.04101-0668	INLET VALVE	12		51.04101-0537 ALTERNATE
9	64.04101-0669	EXHAUST VALVE	12		51.04101-0538 ALTERNATE
10	51.03203-0382	INLET VALVE SEAT	12		
11	51.03203-0409	EXHAUST VALVE SEAT	12		

ROCKER BRACKET

Diagram No. 127

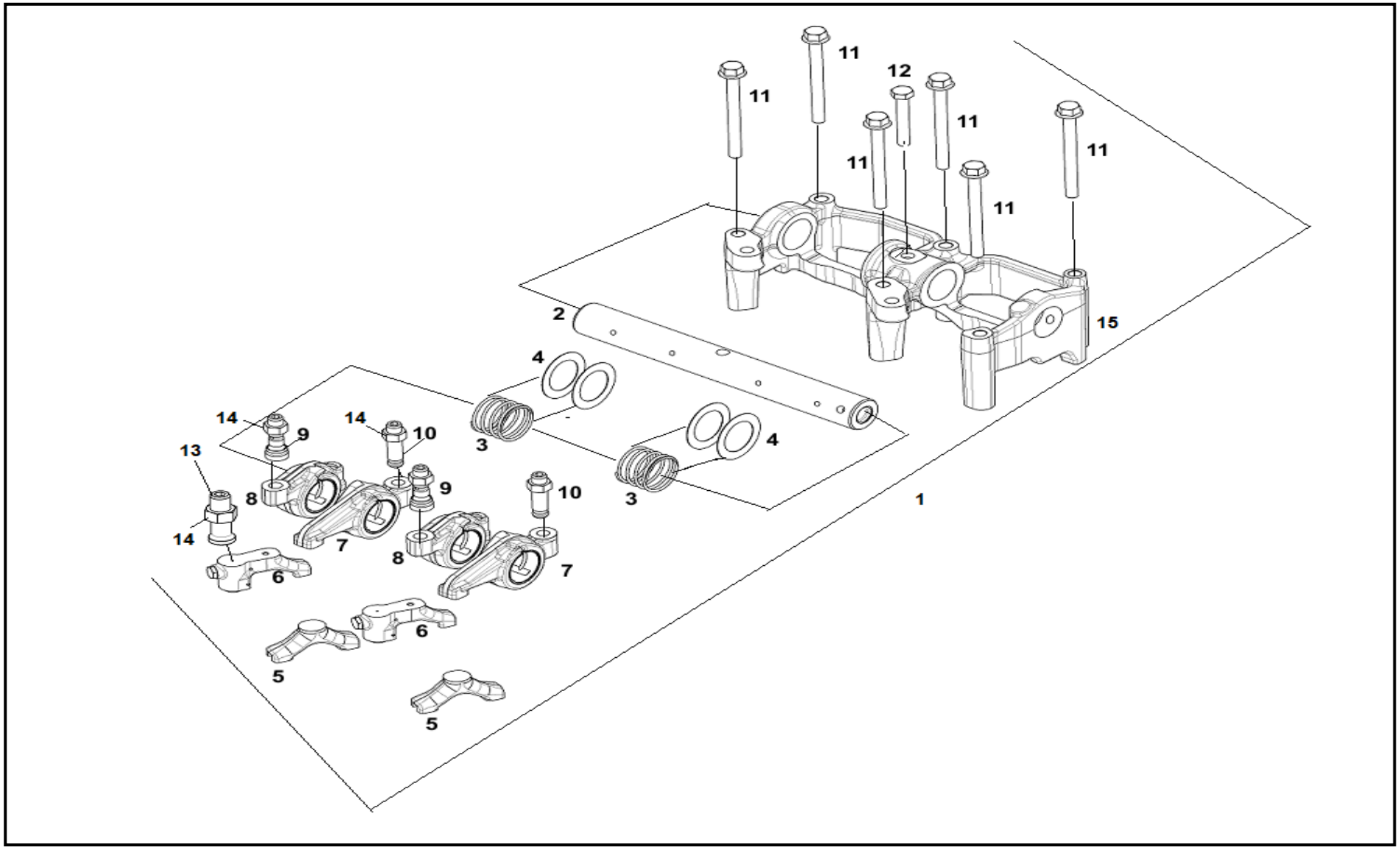

ROCKER BRACKET

Diagram No. 127

SR	PART NO.	DESCRIPTION	QTY	APPLICABLE MODEL	REMARKS
1	51.04200-6030	ROCKER GEAR	3		64.04200-6082 ALTERNATE
2	51.04203-5064	ASSY – ROCKER SHAFT	3		64.04203-5076 ALTERNATE
3	51.97601-0300	PRESSURE SPRING	6		64.97601-0331 ALTERNATE
4	51.90701-0237	WASHER	12		64.90701-0248 ALTERNATE
5	51.04120-0023	VALVE CONNECTION	6		
6	51.04120-6007	VALVE CONNECTION	6		
7	51.04200-6022	ROCKER LEVER ASSY –INTAKE	6		64.04201-6220 ALTERNATE
8	51.04200-6023	ASSY ROCKER LEVER-EXH	6		64.04201-6221 ALTERNATE
9	51.04205-5009	ASSLY ADJUSTING SCREW	6		64.04205-0060 ALTERNATE
10	51.04205-0051	ADJUSTING SCREW – INTAKE	6		
11	06.03215-6332	HEX SCREW DIN6921-M8X85-8.8-MAN183	18		
12	64.90020-0173	HEX SCREW M8X50-10.9 MAN183	3		
13	51.04205-0049	ADJUSTING SCREW	6		
14	64.90501-0001	HEX NUT M10X1	18		
15	51.04202-0165	ROCKER ARM BRACKET	3		64.04202-0176 ALTERNATE

VALVES & VALVE TAPET

Diagram No. 128

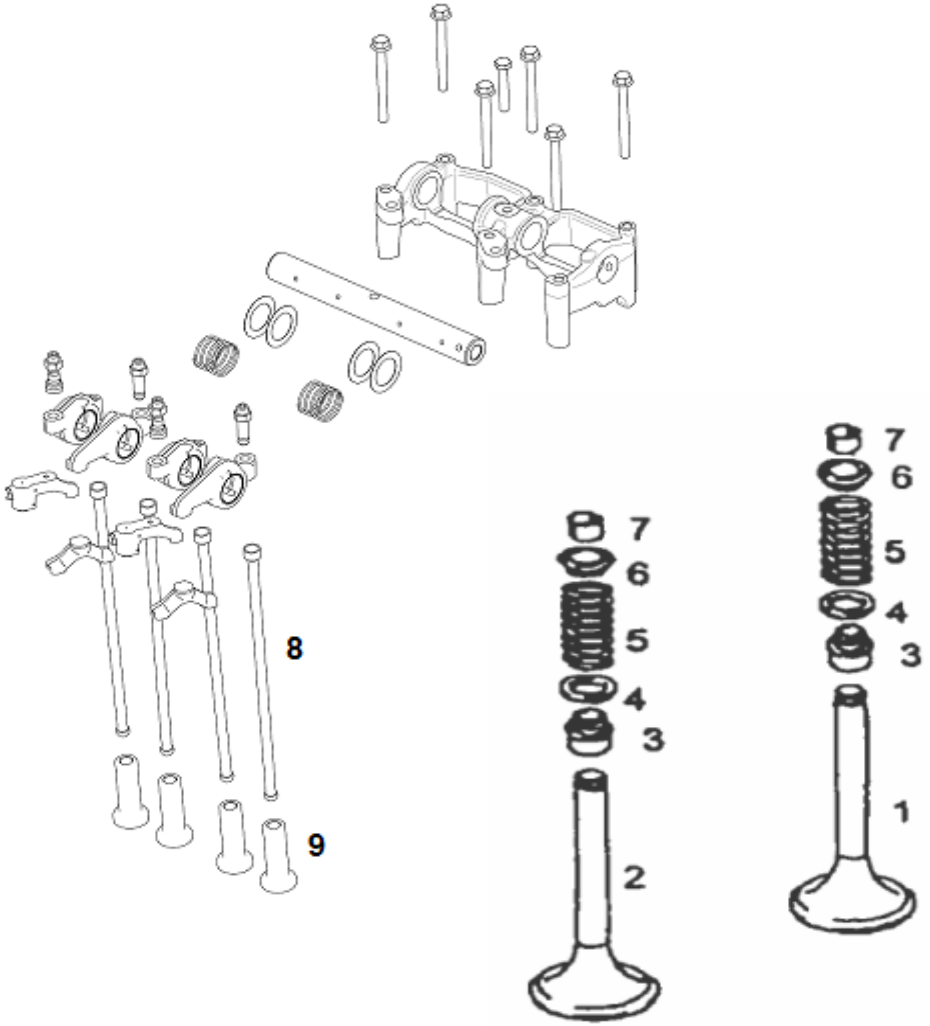

VALVES & VALVE TAPET

Diagram No. 128

SR	PART NO.	DESCRIPTION	QTY	APPLICABLE MODEL	REMARKS
1	64.04101-0668	INLET VALVE	12		51.04101-0537 ALTERNATE
2	64.04101-0669	EXHAUST VALVE	12		51.04101-0538 ALTERNATE
3	51.04902-0042	VALVE STEM SEAL	24		
4	51.90701-0236	WASHER	24		64.90701-0247 ALTERNATE
5	51.04102-0155	VALVE SPRING	24		64.04102-0169 ALTERNATE
6	51.04103-0109	VALVE SPRING RETAINER	24		
7	51.04104-0032	VALVE COLLET	48		64.04104-0039 ALTERNATE
8	51.04302-0062	PUSH ROD	12		
9	51.04301-0131	VALVE TAPPET	12		

CAMSHAFT WITH GEAR

Diagram No. 129

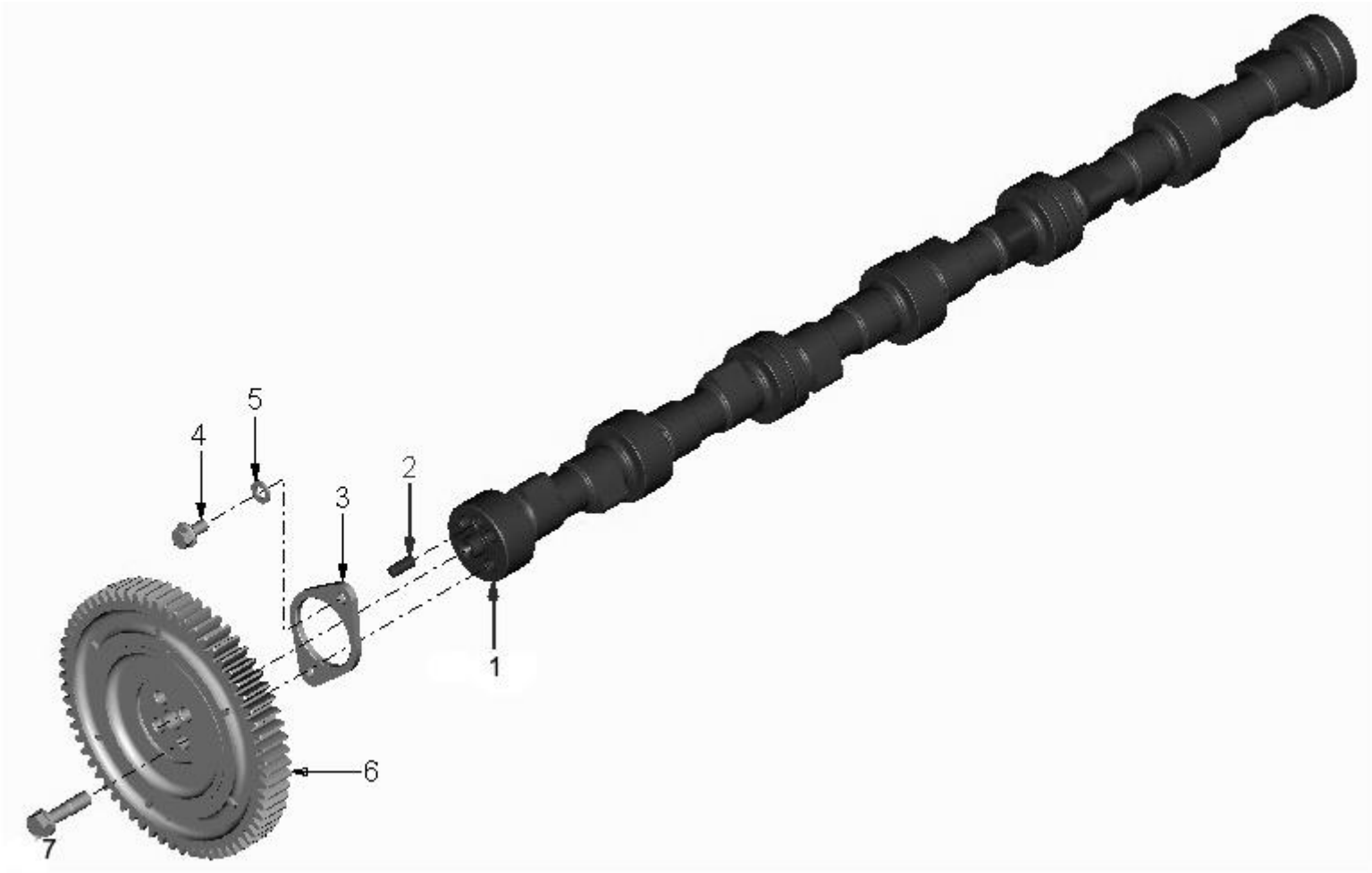

CAMSHAFT WITH GEAR

Diagram No. 129

SR	PART NO.	DESCRIPTION	QTY	APPLICABLE MODEL	REMARKS
1	64.04401-0973	CAM SHAFT	1		ALTERNATE 51.04401-0789
2	64.91001-0004	DOWEL PIN 8M6X18-ST50-2K DIN 7	1		06.22022-1011 ALTERNATE
3	64.98112-0001	FLANGE	1		
4	64.90020-0092	HHS M8X16 DIN 933-8.8 BTS:170102.20	2		
5	64.90710-0026	PL WASHER A8.4 DIN125-ST BTS170202.12	2		
6	64.04501-5025	ASSLY CAMSHAFT GEAR	1		64.04501-5001 ALTERNATE
7	64.90020-0001	HEX COLLER SCREW M10X1.25X38	4		

INTERMEDIATE GEAR ASSY. 1

Diagram No. 130

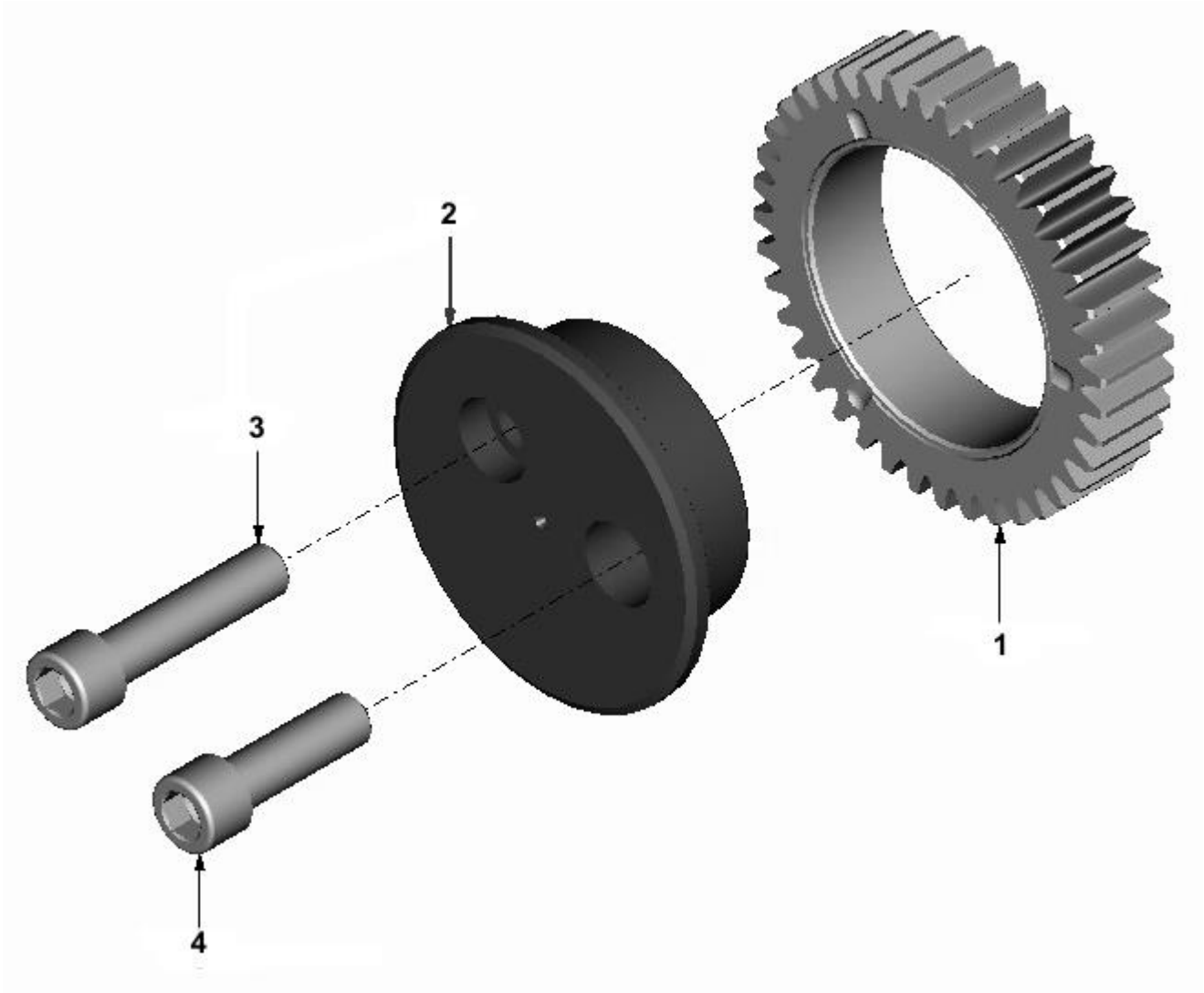

INTERMEDIATE GEAR ASSY. 1

Diagram No. 130

SR	PART NO.	DESCRIPTION	QTY	APPLICABLE MODEL	REMARKS
1	64.04505-5002	INTERMEDIATE GEAR 1- ASSLY	1		
2	64.04506-0115	INTERMEDIATE GEAR SHAFT 1	1		64.04506-0005 ALTERNATE
3	06.02099-0411	SCREW M14X1.75X60-8.8 PHR DIN 912	1		
4	06.02099-0365	SCREW M14X1.75X45-8.8 ZNPHR3F DIN 912	1		

INTERMEDIATE GEAR ASSY. 2 **Diagram No. 131**

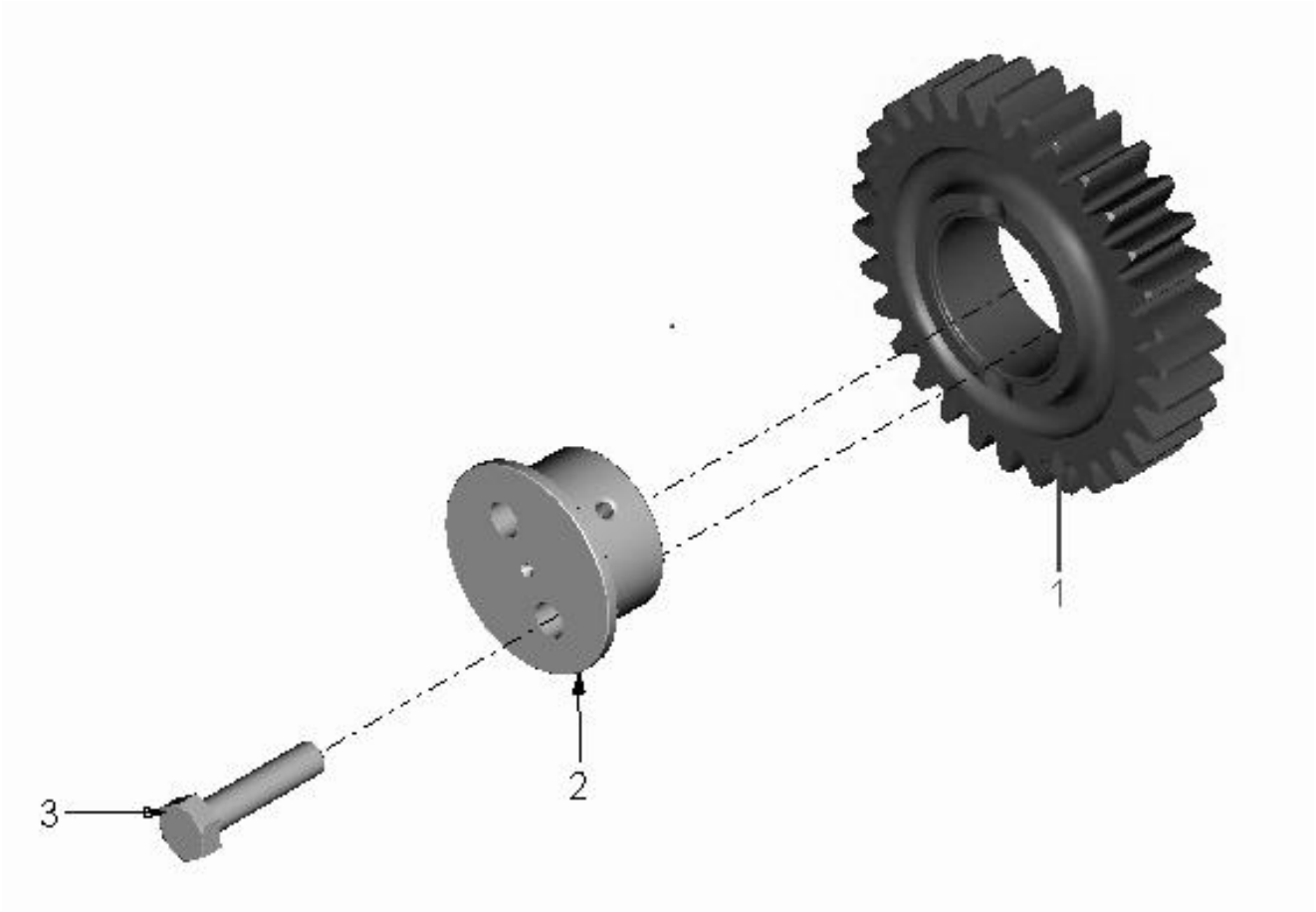

INTERMEDIATE GEAR ASSY. 2

Diagram No. 131

SR	PART NO.	DESCRIPTION	QTY	APPLICABLE MODEL	REMARKS
1	64.04505-5157	INTERMEDIATE GEAR 2- ASSLY	1		
2	64.11302-0060	INTERMEDIATE GEAR SHAFT	1		64.11302-0001 ALTERNATE
3	64.90020-0100	HEX HEAD SCREW M8X40 DIN933-8.8	2		

DRAIN PLUG OIL FILTER HEAD DELETION STARTING AID

Diagram No. 132

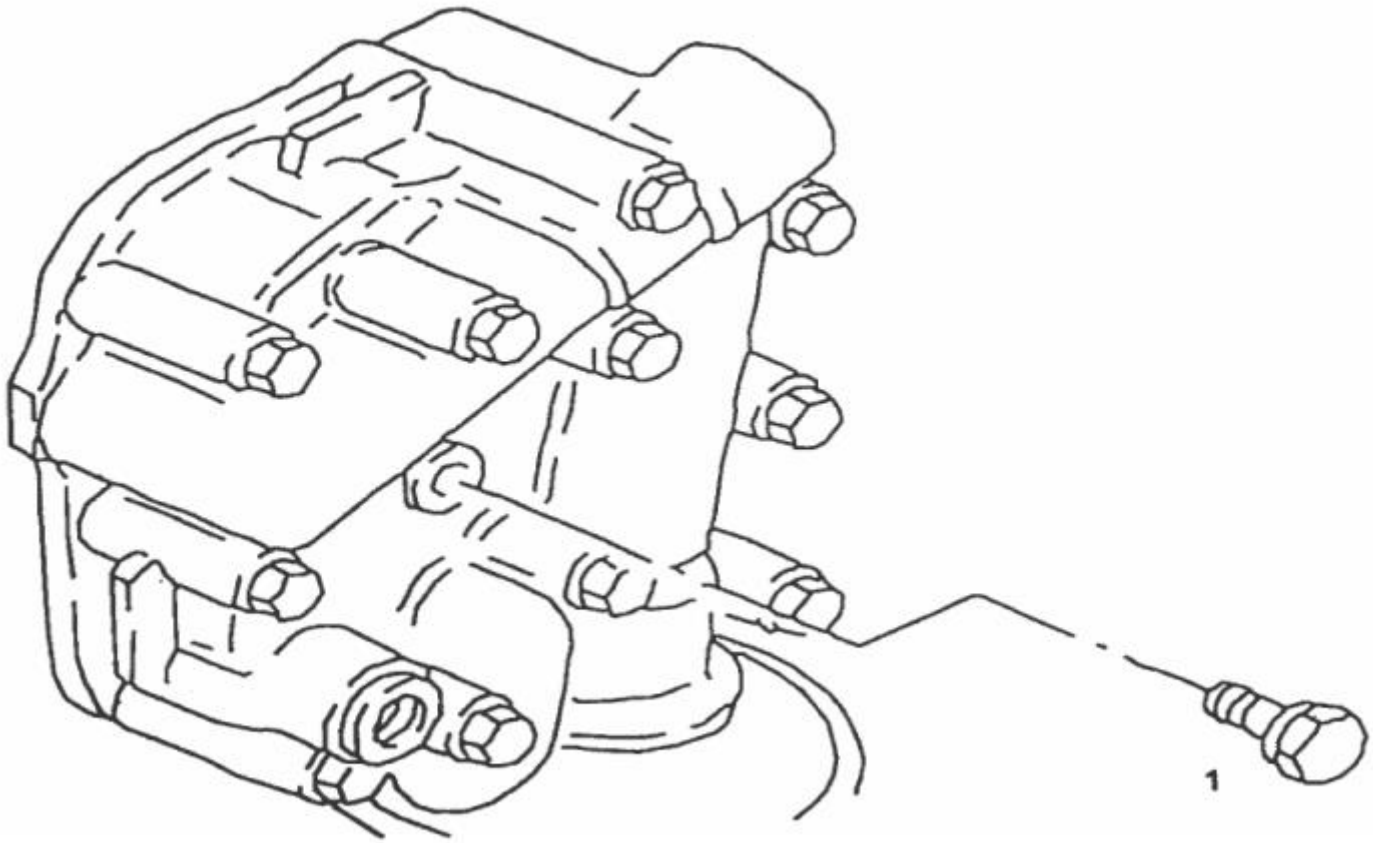

DRAIN PLUG OIL FILTER HEAD DELETION STARTING AID

Diagram No. 132

SR	PART NO.	DESCRIPTION	QTY	APPLICABLE MODEL	REMARKS
1	64.90490-0043	LOCKING BOLT C-M 10X1-ST-A3C DIN 7604	1		
-	06.56631-0104	SEALING WASHER BS-10,7X16,0-ST FPM1-80	1		

FUEL FILTER **Diagram No. 133**

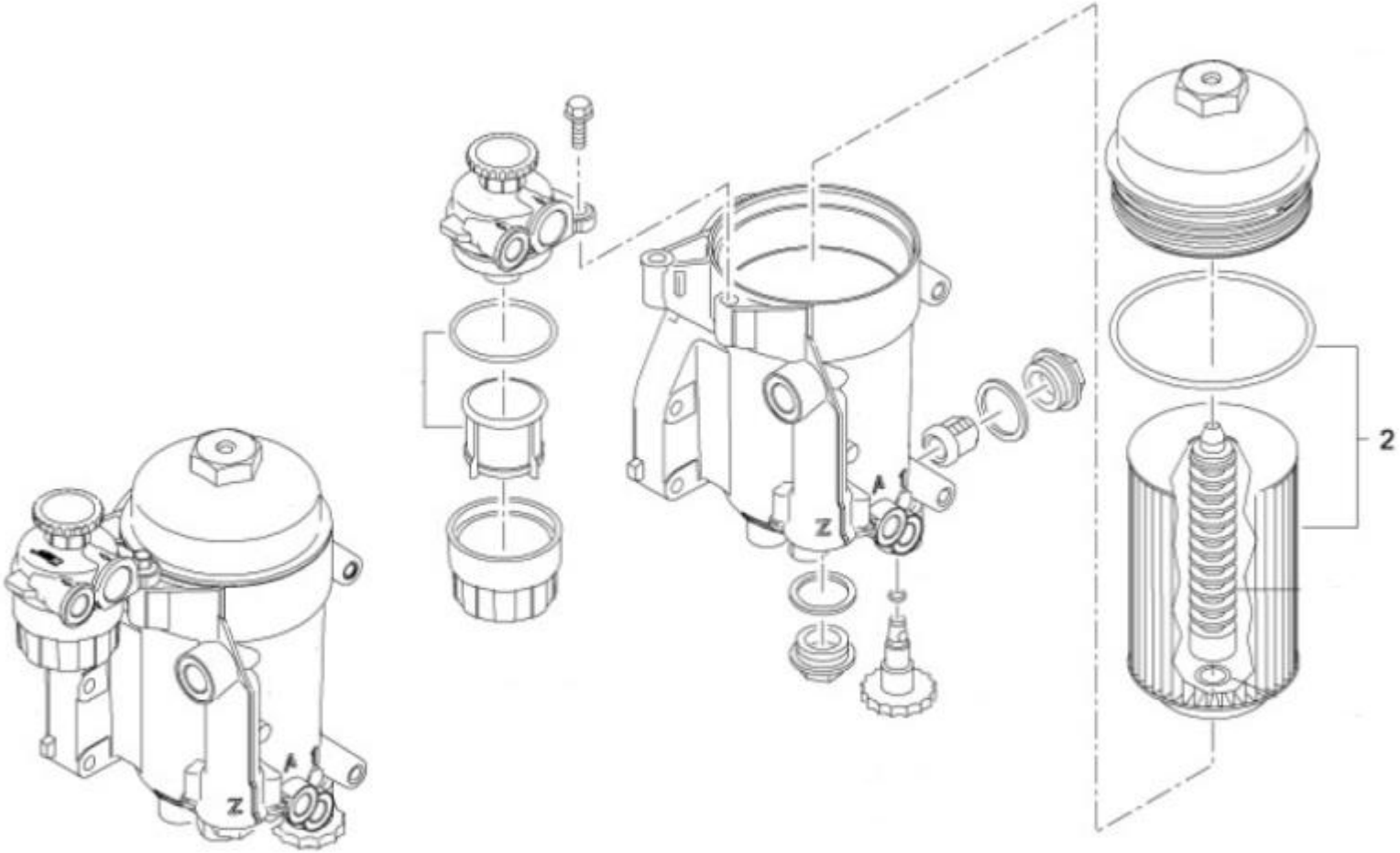

FUEL FILTER

Diagram No. 133

SR	PART NO.	DESCRIPTION	QTY	APPLICABLE MODEL	REMARKS
1	51.12501-7313	FUEL FILTER ASSEMBLY	1		
2	51.12503-0061	FUEL FILTER CARTRIDGE WITH O RING	1		

MOUNTING OIL SUMP ON CRANKCASE YOKE

Diagram No. 134

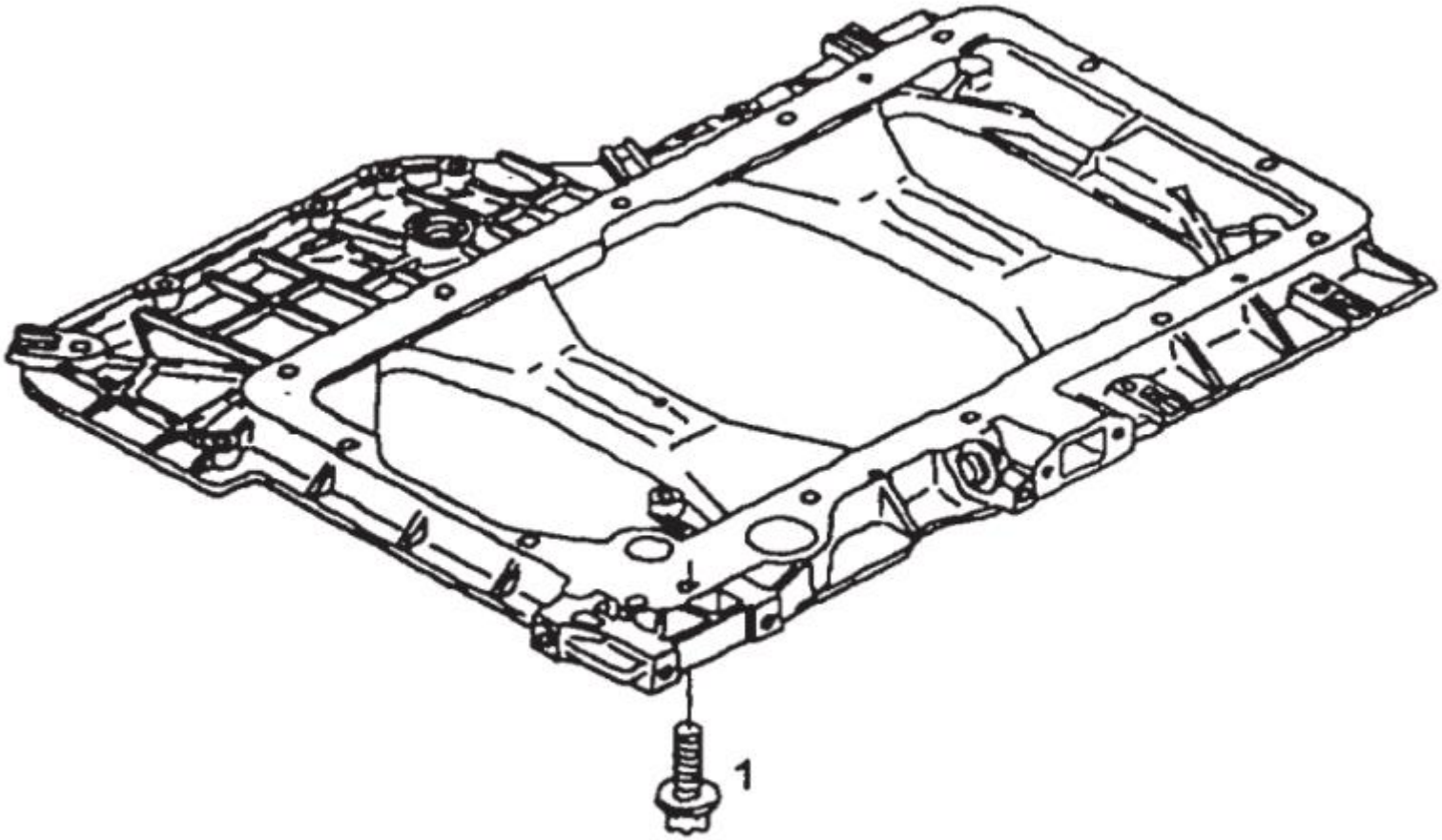

MOUNTING OIL SUMP ON CRANKCASE YOKE

Diagram No. 134

SR	PART NO.	DESCRIPTION	QTY	APPLICABLE MODEL	REMARKS
1	64.90030-0010	SCREW B M8X40-8.8-MAN183-PHR DIN 34801	19		06.03221-0609 ALTERNATE

OIL FILLER PIPE

Diagram No. 135

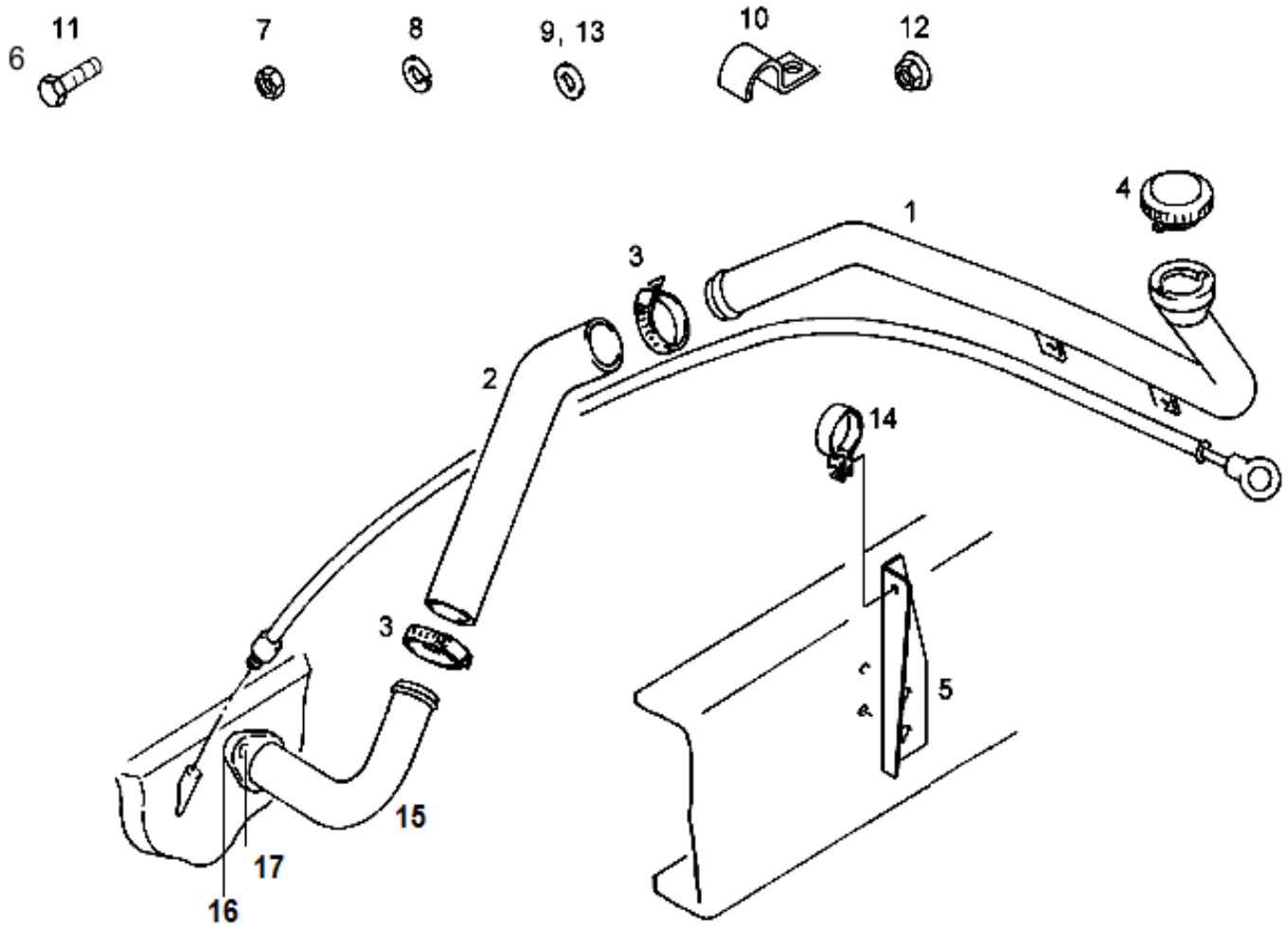

OIL FILLER PIPE

Diagram No. 135

SR	PART NO.	DESCRIPTION	QTY	APPLICABLE MODEL	REMARKS
1	64.05807-0001	OIL FILLING PIPE	1		
2	64.96330-0014	HOSE (ENGINE OIL FILLING)	1		
3	64.97445-0032	WORM DRIVE HOSE CLIP (42-55)- KLIPCO	2		
4	64.01811-0002	CAP WITH KEYS	1		
5	64.41710-0175	BKT. FOR OIL FILLING PIPE ON CHASSIS	1		
6	64.90020-0243	HEX HEAD BOLT M6X30 DIN933-8.8 A3C	2		
7	64.90501-0036	HEX NUT M6X1.00 DIN934-8 A3C	4		
8	64.90801-0046	SPRING WASHER B6 DIN127 A3C	2		
9	64.90710-0025	PLAIN WASHER A6.4 DIN125-ST A3C	2		
10	64.97122-0015	PIPE CLAMP A12 MAN 194	3		
11	64.90020-0087	HEX HEAD SCREW M6X16 DIN933-8.8 A3C	3		
12	06.11240-0403	HEX. NUT BM6-8 MAN183-B1 M711260	3		
13	64.90710-0025	PLAIN WASHER A6.4 DIN125-ST A3C	6		
14	64.97420-0004	OIL PIPE HOLDING CLAMP (ON CHASSIS)	1		
15	64.05807-0016	OIL FILLING PIPE M/C	1		51.05807-0011 ALTERNATE
16	64.96601-0018	GASKET	1		
17	64.90020-0097	HEX HEAD SCREW M8X30 DIN933-8.8 PHR	2		
17	64.90710-0026	PLAIN WASHER A8.4 DIN125-ST A3C	2		

Page No. 138		**REVISION NO. 001**			**VERSION: 001**

OIL DIPSTICK WITH TUBE

Diagram No. 136

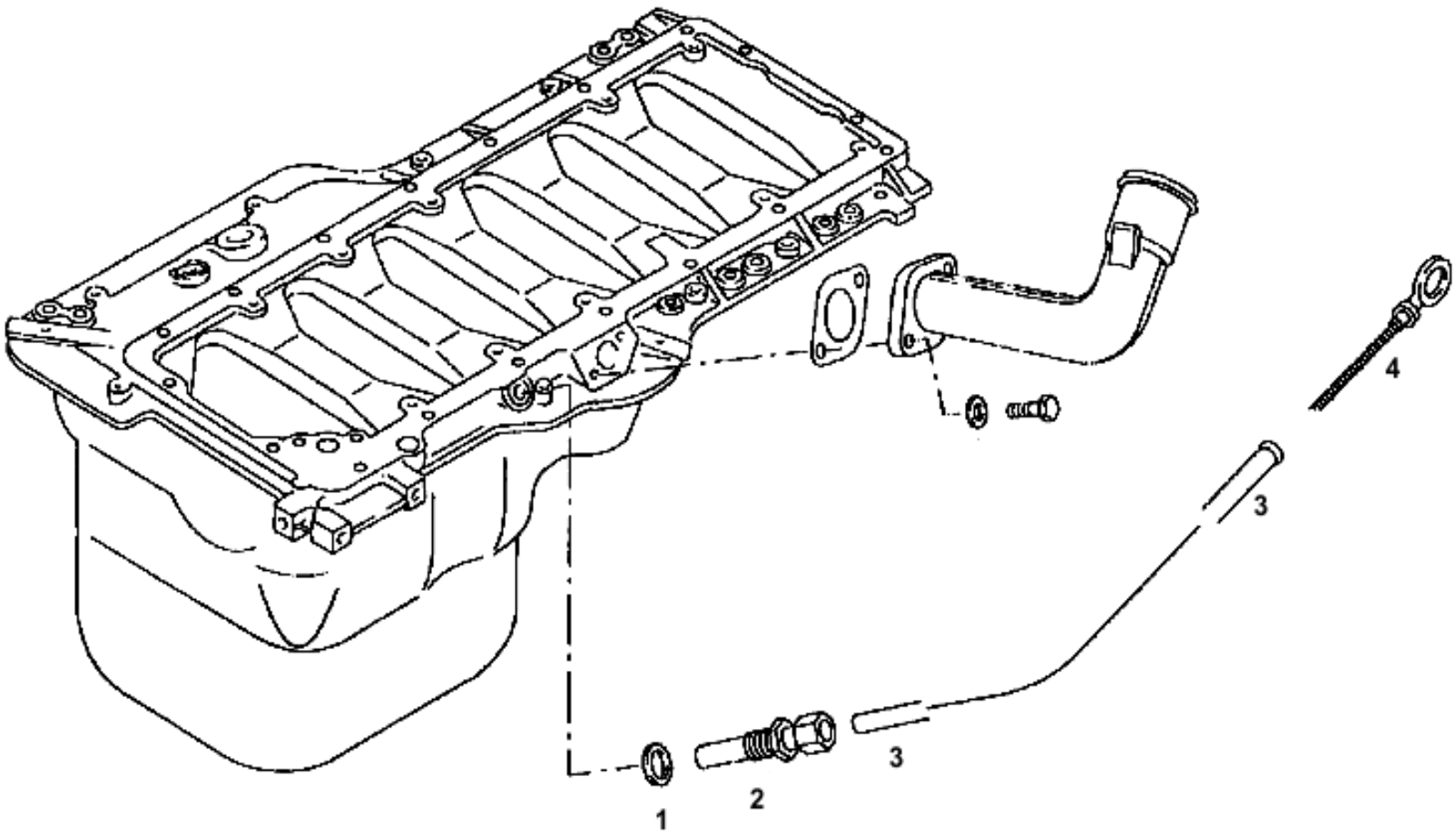

OIL DIPSTICK WITH TUBE

Diagram No. 136

SR	PART NO.	DESCRIPTION	QTY	APPLICABLE MODEL	REMARKS
1	06.56631-0106	SEALING RING BS-14,7X22,O-ST TPMI-80	1		
2	51.98181-0004	ASSY DIPSTICK ADAPTOR	1		64.98181-0001 ALTERNATE
3	64.05806-5001	ASSY GUIDING TUBE	1		
4	64.05805-5003	ASSLY OIL DIPSTICK (21-26 LTRS)	1		

OIL FILLER HEAD, OIL FILTER AND OIL COOLER

Diagram No. 137

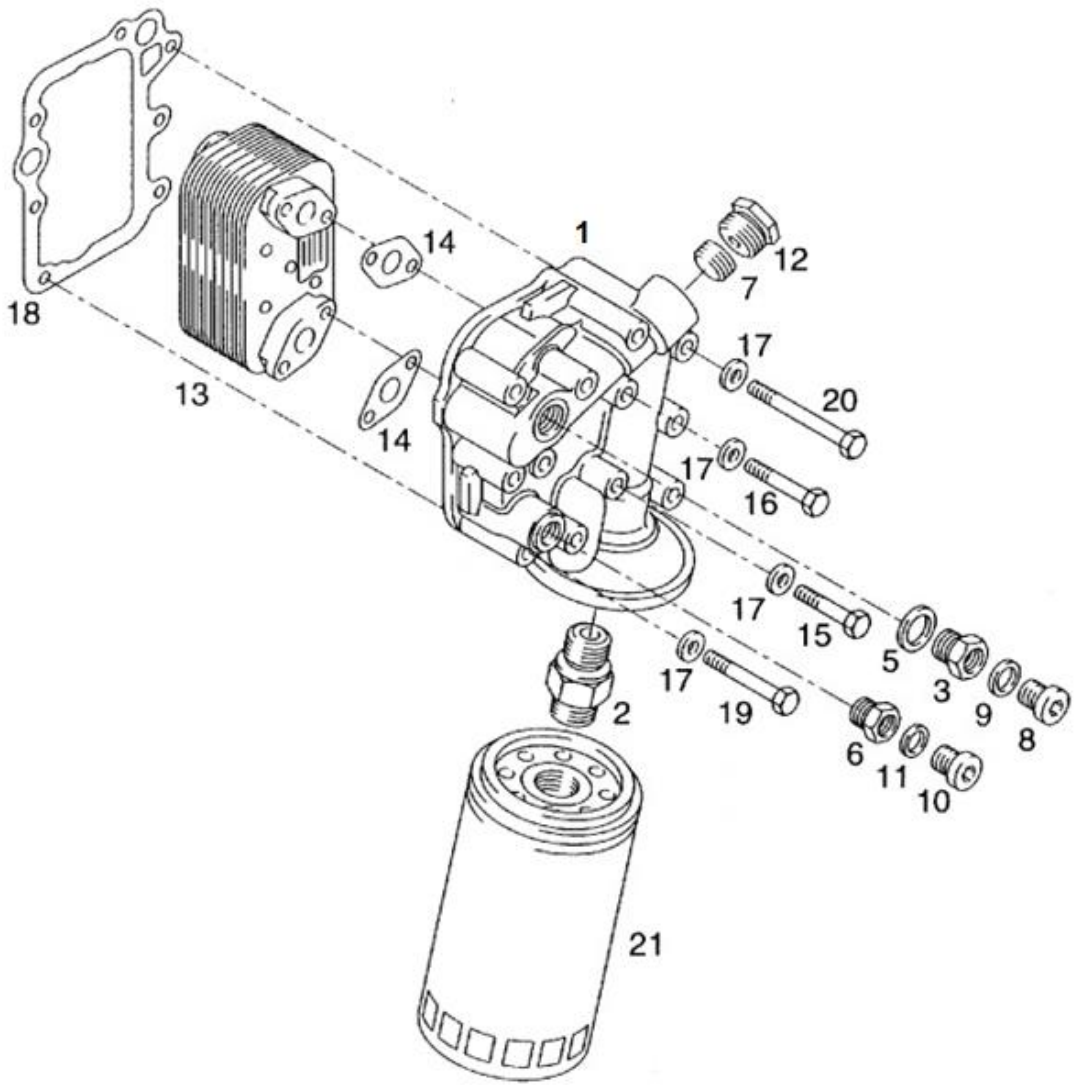

OIL FILLER HEAD, OIL FILTER AND OIL COOLER

Diagram No. 137

SR	PART NO.	DESCRIPTION	QTY	APPLICABLE MODEL	REMARKS
1	51.05503-0098	OIL FILTER HEAD M/C	1	COMMON FOR ALL MODELS	SUPERCEDED BY 64.05503-0104
2	64.98130-0006	THREADED PART	1	COMMON FOR ALL MODELS	SUPERCEDED BY 64.98130-0743
3	64.98130-0004	THREADED PART M24X1.5-M18X1.5	1	COMMON FOR ALL MODELS	
5	06.56631-0111	SEALING RING BS24.7X32.0-ST /FPM 1-80	1	COMMON FOR ALL MODELS	
6	64.92010-0001	THREADED BUSH M24X1.5-M18X1.5	1	COMMON FOR ALL MODELS	
7	64.90310-0007	LOCKING BOLT M24X1.5-ST-ZNPHR3F DIN 906	1	COMMON FOR ALL MODELS	
8	64.90490-0037	LOCKING BOLT M18X1.5-ST-A3C DIN 908	1	COMMON FOR ALL MODELS	
9	06.56631-0109	SEALING RING BS18.7X26.0-ST /FPM 1-80	1	COMMON FOR ALL MODELS	
10	64.90490-0042	LOCKING BOLT M18X1.5-ST-A3C DIN 7604	1	COMMON FOR ALL MODELS	
11	06.56631-0109	SEALING RING BS18.7X26.0-ST /FPM 1-80	1	COMMON FOR ALL MODELS	
12	64.98130-0001	SCREW FITTING M30X1.5/18X1.5	1	COMMON FOR ALL MODELS	
13	64.05601-0003	OIL COOLER	1	COMMON FOR ALL ENGINES EXCEPT 180 HP ENGINES	SUPERCEDED BY 64.05601-0195
13	64.05601-0002	OIL COOLER	1	COMMON FOR 180 HP ENGINES ONLY	
14	64.96601-0017	GASKET FOR OIL COOLER	2	COMMON FOR ALL MODELS	
15	64.90030-0011	SCREW B M8X45-8.8-MAN183 PHR DIN 34801	2	COMMON FOR ALL MODELS	
16	64.90030-0012	SCREW B M8X55-8.8-MAN183 PHR DIN 34801	2	COMMON FOR ALL MODELS	
17	64.90710-0077	WASHER 8.4 DIN125-200HV MAN183-B1	11	COMMON FOR ALL MODELS	
18	64.05901-0001	GASKET FOR OIL FILTER HEAD	1	COMMON FOR ALL MODELS	

OIL FILLER HEAD, OIL FILTER AND OIL COOLER

Diagram No. 137

SR	PART NO.	DESCRIPTION	QTY	APPLICABLE MODEL	REMARKS
19	64.90030-0013	SCREW B M8X65-8.8-MAN183 PHR DIN 34801	3	COMMON FOR ALL MODELS	
20	64.90030-0014	SCREW B M8X95-8.8-MAN183 PHR DIN 34801	4	COMMON FOR ALL MODELS	
21	64.05501-7001	SPIN ON FILTER	1	COMMON FOR ALL MODELS	SUPERCEDED BY 64.05501-7227

OIL PUMP **Diagram No. 138**

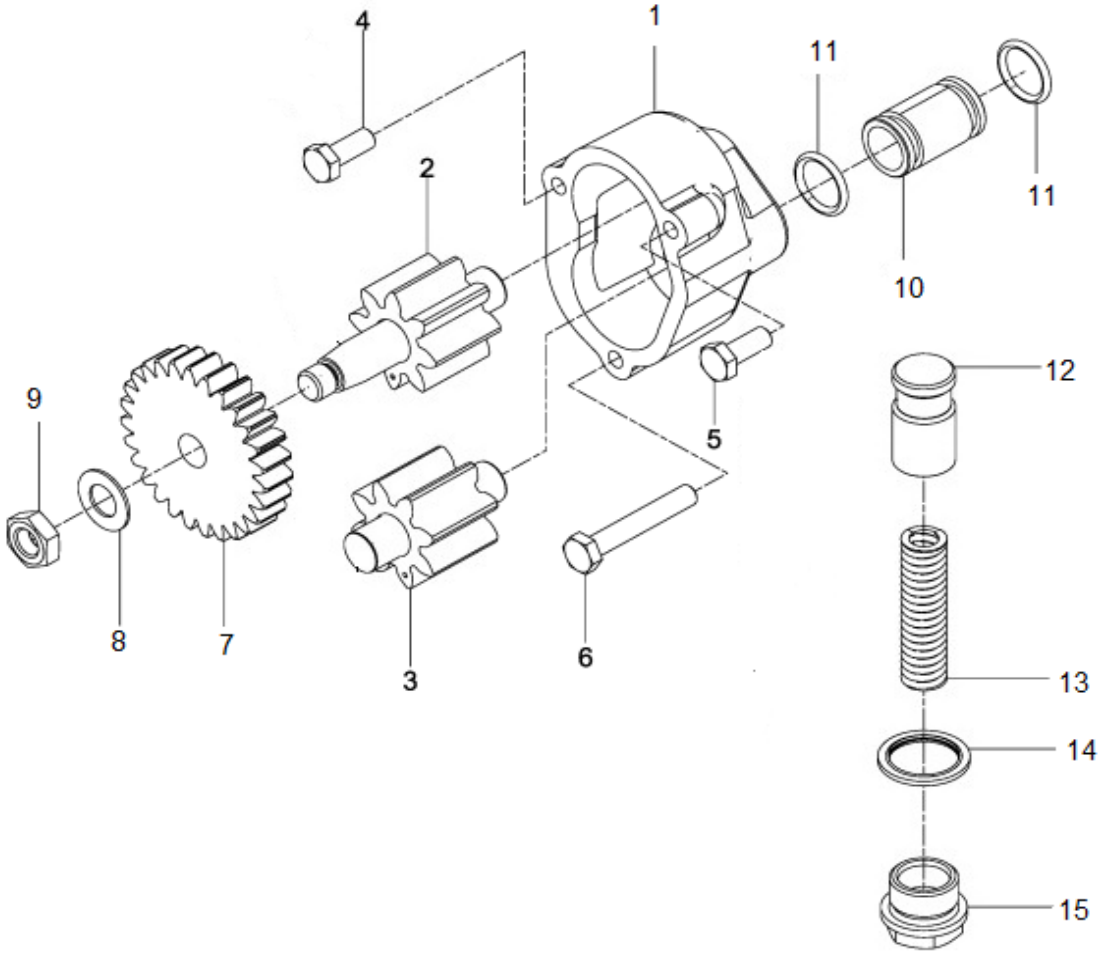

OIL PUMP

Diagram No.138

SR	PART NO.	DESCRIPTION	QTY	APPLICABLE MODEL	REMARKS
A	64.05100-6300	ASSY LUB OIL PUMP (D0836)	1		
1	64.05102-0005	LUB OIL PUMP HSG (D0836)	1		
2	64.05104-6011	ASSLY GEAR WITH SHAFT	1	FOR ALL ENGINES EXCEPT 180 HP ENGINES	
3	64.05104-6009	ASSLY GEAR WITH SHAFT	1	FOR ALL ENGINES EXCEPT 180 HP ENGINES	
4	64.90020-0229	HEX SCREW M8X20-10.9-MAN183 PHR DIN 933	1		
5	64.90020-0229	HEX SCREW M8X20-10.9-MAN183 PHR DIN 933	1		
6	64.90020-0229	HEX SCREW M8X20-10.9-MAN183 PHR DIN 933	1		
-	64.90710-0077	WASHER 8.4 DIN125-200HV MAN183-B1	3		FOR SR 4,5 & 6
7	51.05201-0083	DRIVE GEAR	1		
8	64.90801-0009	SPRING WASHER B12-ZNPHR3F DIN 137	1		
9	64.90501-0050	HEX NUT M12X1.5-17H-ZNPHR3F DIN 936	1		
10	64.05207-0001	OIL DELIVERY PIPE	1		
11	64.96501-0036	O RING 19X3 B-FPM 1-70 STOFF NR MAN 308	2		06.56333-4245 ALTERNATE
12	64.05410-0002	PISTON FOR PR. RELIEF VALVE	1		
13	64.97601-0011	COMPRESSION SPRING FOR PR. RELIEF VALVE	1		
14	06.56631-0111	SEALING RING BS24.7X32.0-ST /FPM 1-80	1		
15	64.90310-0001	LOCKING BOLT M24X1.5	1		

OIL SUCTION PIPE

Diagram No. 139

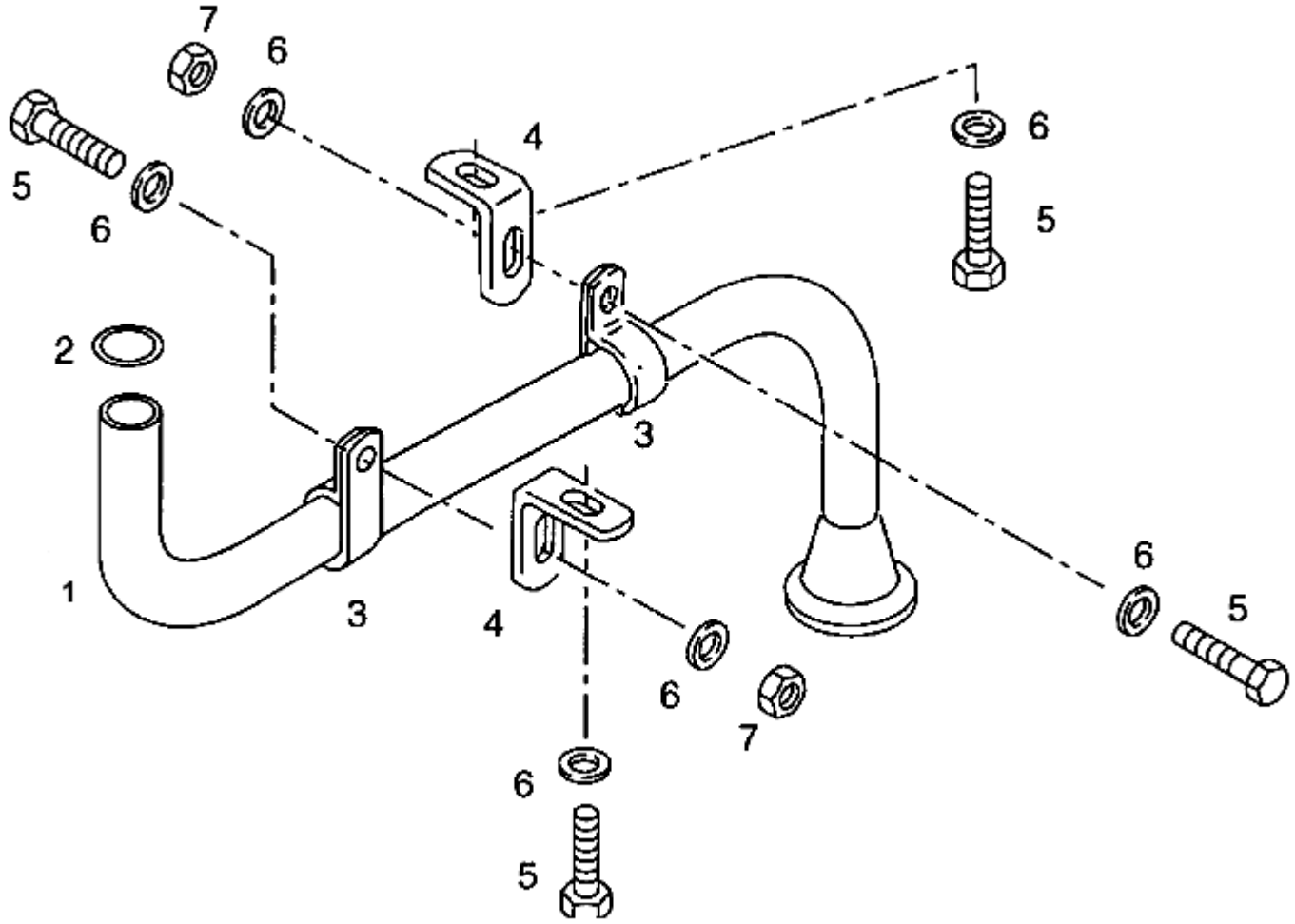

OIL SUCTION PIPE

Diagram No. 139

SR	PART NO.	DESCRIPTION	QTY	APPLICABLE MODEL	REMARKS
1	64.05703-5002	OIL SUCTION TUBE	1		
2	64.96501-0035	O RING 25X3 B-FPM 1-70 M7.660.`	1		06.56333-3258 ALTERNATE
3	64.97401-0014	PIPE CLAMP	2		64.97401-0633 ALTERNATE
4	64.97485-0489	HOLDING ANGLE	2		
5	64.90020-0093	HHS M8 X20 DIN 933-8.8 BTS:170102.20	4		
6	64.90710-0026	PL WASHER A8.4 DIN125-ST BTS170202.12	6		
7	64.90501-0037	HEX NUT M8X1.25 DIN 934-8 BTS170202.22	2		

AIR COMPRESSOR PIPING

Diagram No. 140

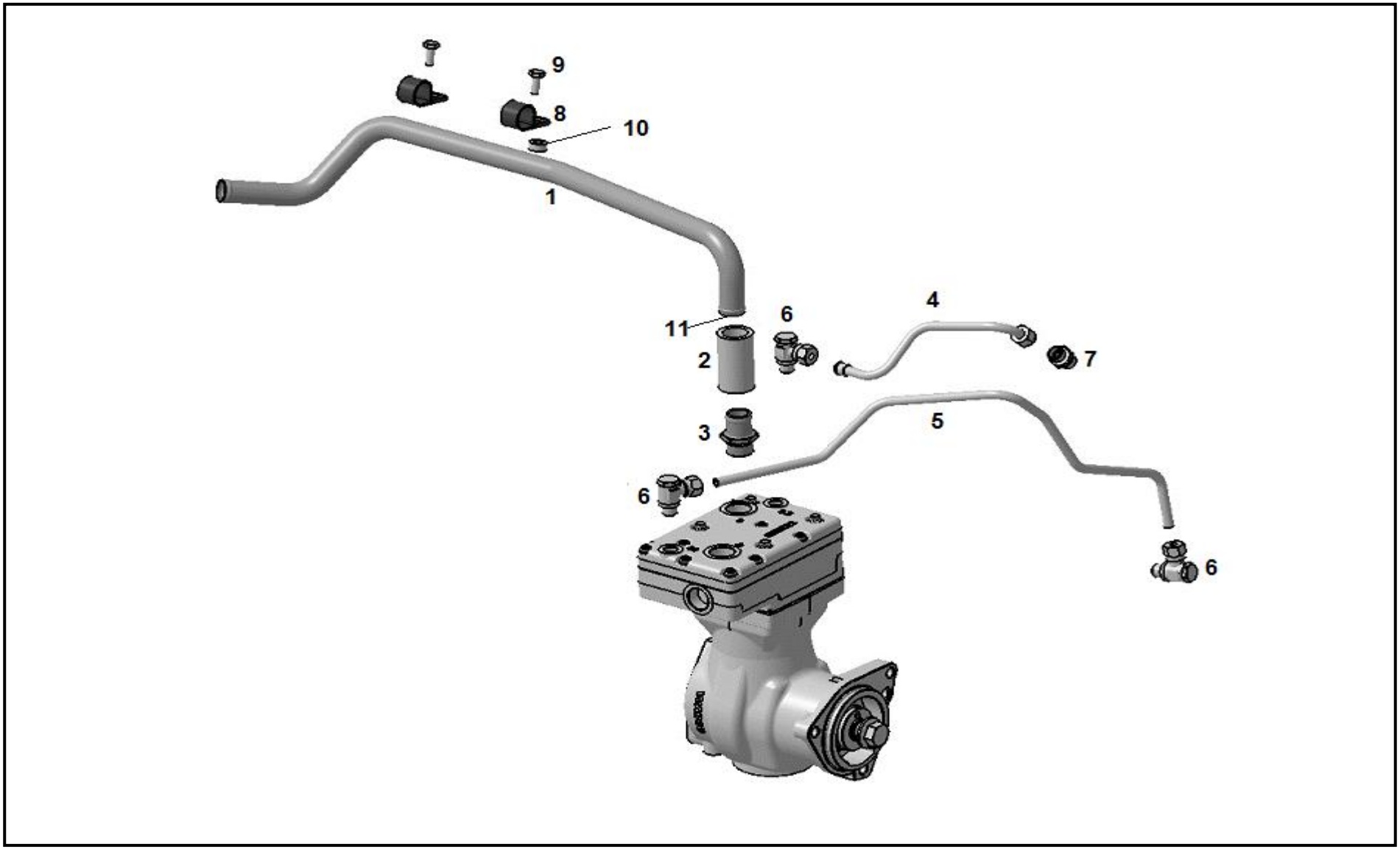

AIR COMPRESSOR PIPING

Diagram No. 140

SR	PART NO.	DESCRIPTION	QTY	APPLICABLE MODEL	REMARKS
1	64.54120-0499	AIR COMPRESSOR INLET PIPE	1		
2	64.96330-0040	HOSE-AIR COMPRES.INLET	1		SUPERCEDED BY 64.96330-0025
3	64.98001-0004	PIPE FITTING M16X1.5-M16X1.5(ADAPTOR)	1		
4	64.06303-5008	COOLANT LINE -COMPRESSOR TO THERMOSTAT	1		
5	64.06303-5007	COOLANT LINE -COOLANT PUMP TO COMPRESSOR	1		
6	51.98110-0235	CONNECTOR FOR WATER CONNECTION	3		
7	51.98131-0072	SCREW PLUG M26X1.5 DN 25	1		
7	06.56631-0112	SEALING WASHER BS26.7X34.9-ST /FPM 1-80	1		
8	64.97401-0014	PIPE CLAMP	1		
9	06.01289-0307	HEX SCREW DIN933-M8X25-8.8-C2J	2		
10	06.15019-0082	WASHER 8,4-PSP 3010 /DIN 7733	2		
11	64.97445-0023	SPRING BAND CLAMP 35X12	2		NOT SHOWN IN DIAGRAM.FITMENT LOCATION SHOWN

OIL SUMP AND CRANKCASE YOKE

Diagram No. 141

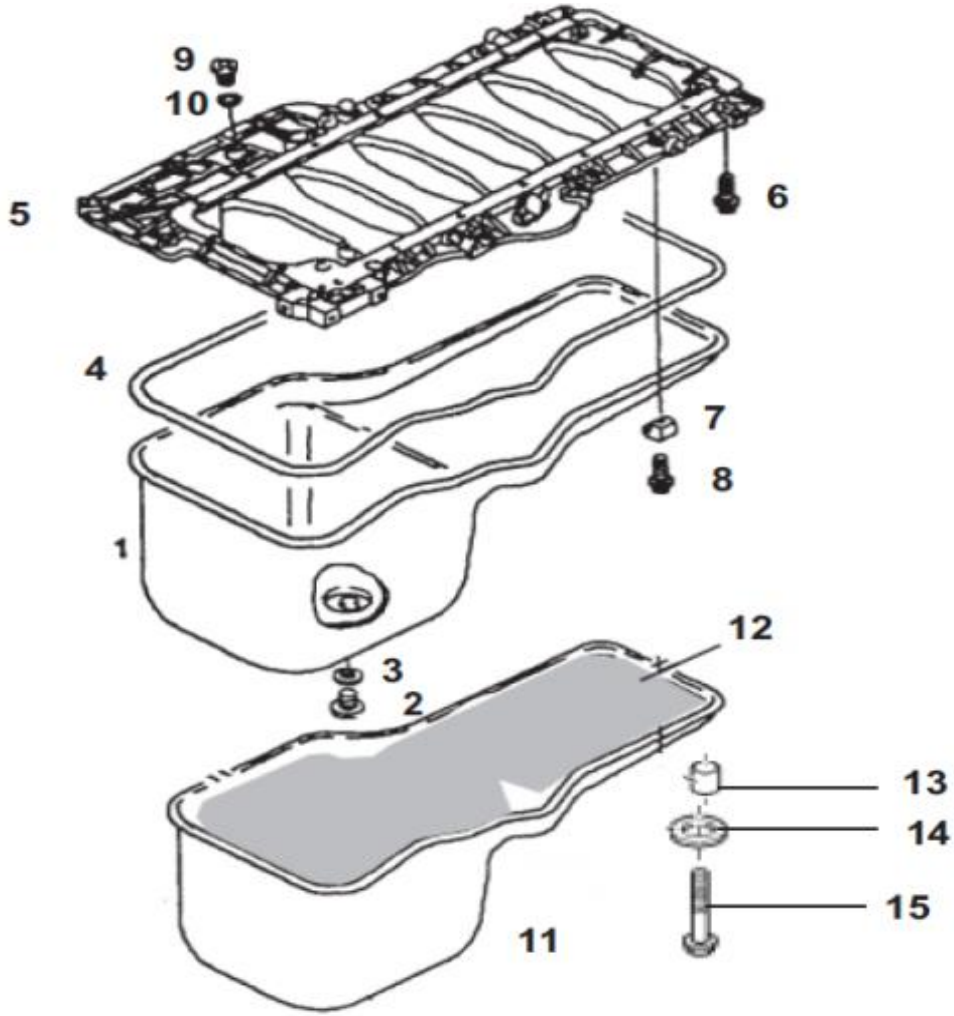

OIL SUMP AND CRANKCASE YOKE

Diagram No. 141

SR	PART NO.	DESCRIPTION	QTY	APPLICABLE MODEL	REMARKS
1	64.05801-6002	OIL SUMP ASSEMBLY	1		SUPERCEDED BY 64.05801-5860
2	64.90490-0035	DRAIN PLUG M22 X 1.5	1		
3	06.56631-0110	SEALING RING B22.7 X 30	1		SUPERCEDED BY 06.56631-0239
4	64.05904-0001	GASKET FOR OIL SUMP	1		51.05904-0195 ALTERNATE
5	64.01108-0112	CRANKCASE COVER BOTTOM M/C	1		
6	64.90030-0010	SCREW B M8X40-8.8-MAN183-PHR DIN 34801	19		06.03221-0609 ALTERNATE
7	64.05840-0001	RETAINER FOR OIL SUMP	12		SUPERCEDED BY 64.05840-0157
8	64.90030-0010	SCREW B M8X40-8.8-MAN183-PHR DIN 34801	12		06.03221-0609 ALTERNATE
9	64.90490-0037	LOCKING BOLT M18X1.5-ST-A3C DIN 908	1		
10	06.56631-0109	SEALING RING BS18.7X26.0-ST /FPM 1-80	1		
11	64.19220-0189	OIL SUMP COVER (6CYL)	1		
12	51.19220-0180	ABSORBER MAT	1		
13	64.05840-0003	DISTANCE PIECE	4		
14	64.05823-0001	RUBBER GROMMET	4		
15	64.90020-0249	HEX SCREW M8X50-8.8-MAN183-PHR DIN 931	3		
15	64.90020-0322	HEX SCREW M8X80-8.8 DIN6921	1		
15	64.90710-0070	WASHER 8-100HV A3C DIN EN ISO 7094	4		

WATER PUMP & MOUNTING

Diagram No. 142

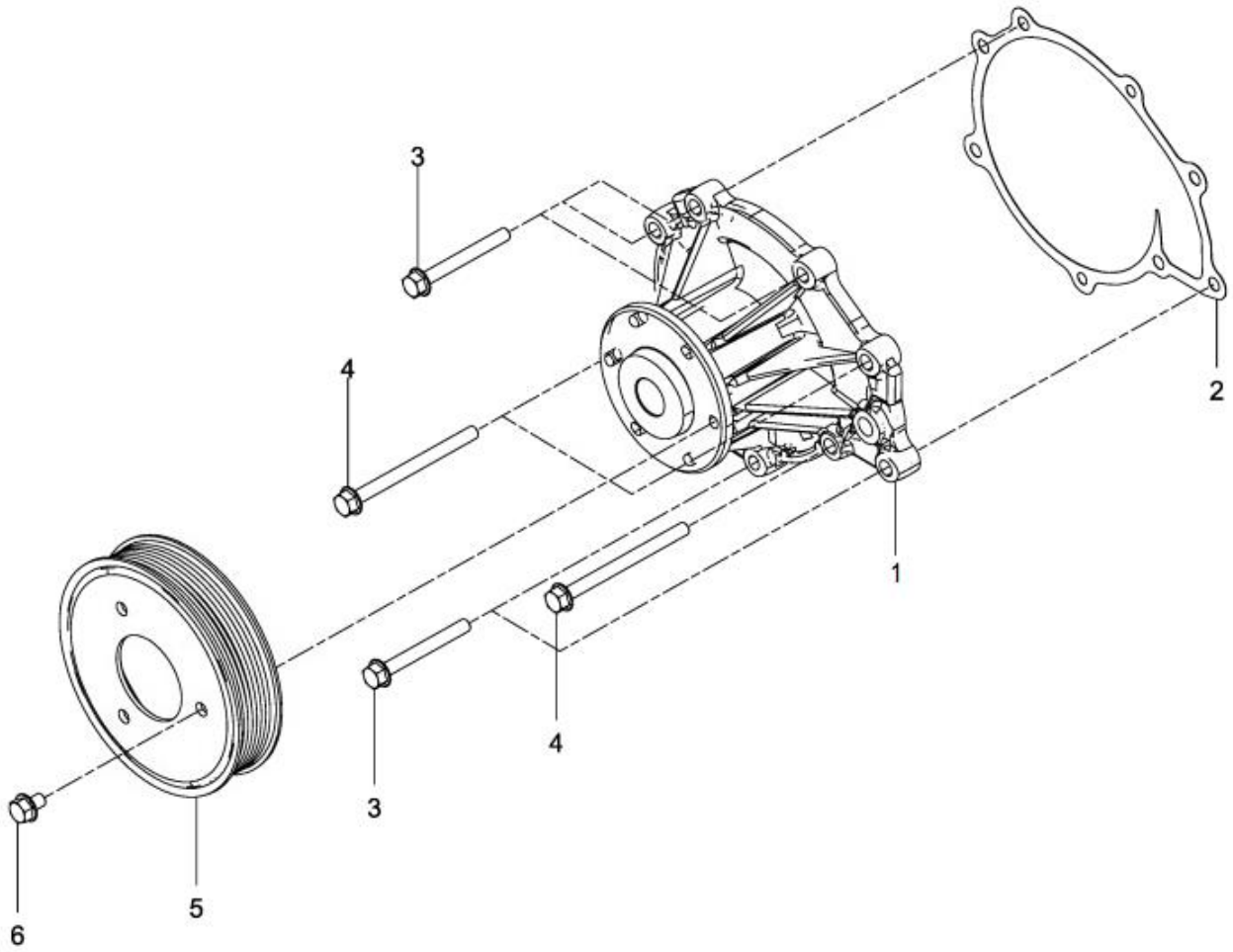

WATER PUMP & MOUNTING (2 & 4 VCR) Diagram No. 142

SR	PART NO.	DESCRIPTION	QTY	APPLICABLE MODEL	REMARKS
1	51.06500-6699	COOLANT PUMP	1		51.06500-6679 ALTERNATE
2	51.06901-0196	GASKET WATER PUMP	1		
3	64.90020-0453	FLANGE BOLT M8X70-10.9 MAN183B1 DIN6921	5		
4	64.90030-0063	FLANGE BOLT M8X100-10.9 MAN183B1 DIN6921	3		
5	64.06503-0404	PULLEY	1		
6	64.90020-0093	HHS M8 X20 DIN 933-8.8 BTS:170102.20	3		

WATER MANIFOLD **Diagram No. 143**

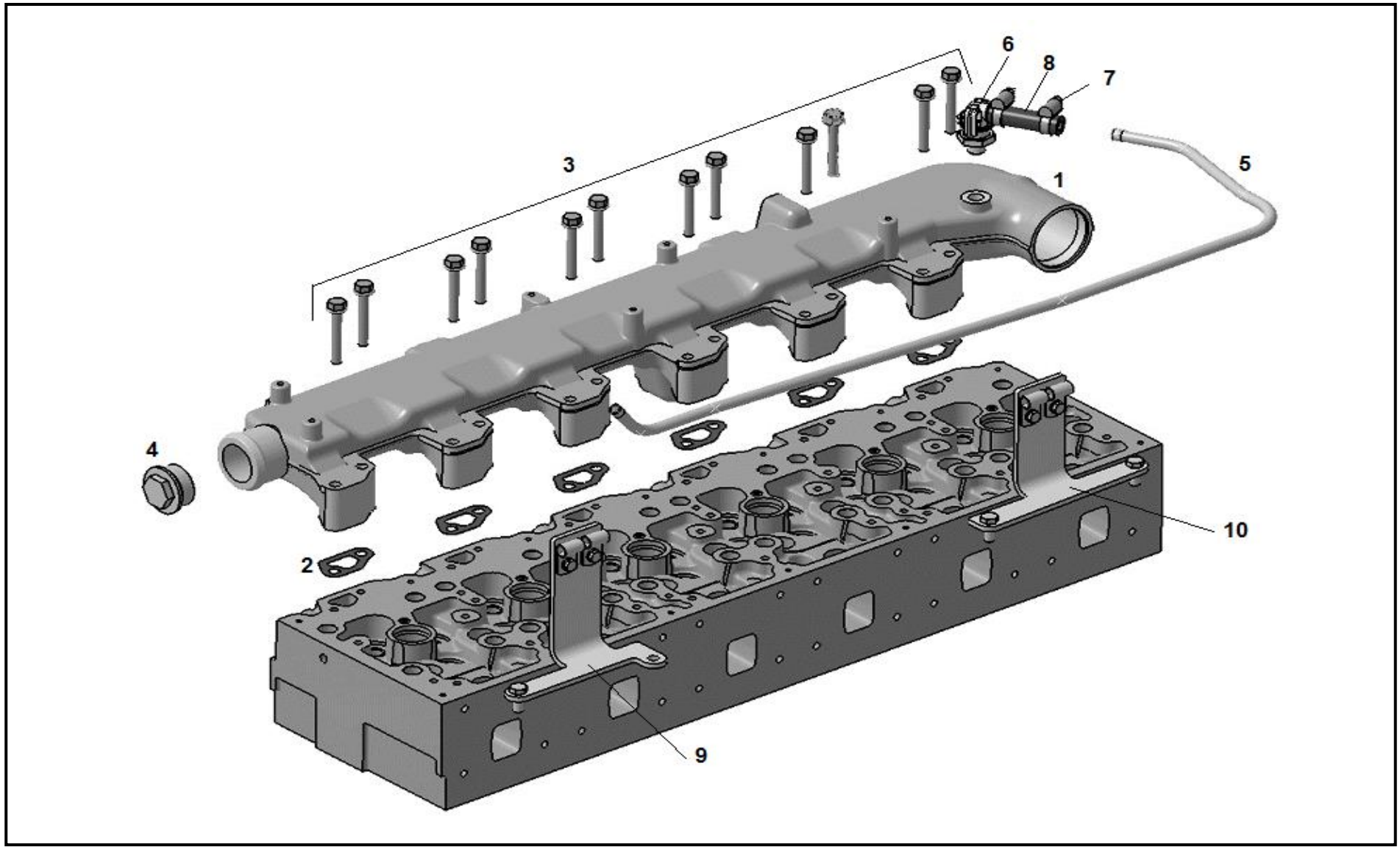

WATER MANIFOLD

Diagram No. 143

SR	PART NO.	DESCRIPTION	QTY	APPLICABLE MODEL	REMARKS
1	64.06304-5616	COOLANT PIPE	1		ALTERNATE 64.06304-5764
2	51.06903-0067	GASKET FOR WATER MANIFOLD	6		
3	06.03216-8311	HEX SCREW DIN6921-M8X55-10.9	12		
4	64.90490-0038	CLOSING PLUG M38X1.5	1		
4	64.91710-0029	SEALING RING A38X44	1		
5	64.06303-0193	PIPE – DEARIATION	1		SUPERCEDED BY 64.06303-0210
6	51.98181-6004	ANGLE SNAP CONNECTOR	1		
7	64.97201-0006	CLIP KLIPCO /(18-25)	2		
8	64.96301-0079	HOSE PIPE(DEARIATION PIPE TO SURGE TANK)	1		
9	64.06340-0372	DEARIATION PIPE SUPPORT - REAR	1		
10	64.06340-0371	DEARIATION PIPE SUPPORT - FRONT	1		
Page No. 147		**REVISION NO. 001**			**VERSION: 001**

AIR INTAKE MANIFOLD

Diagram No. 144

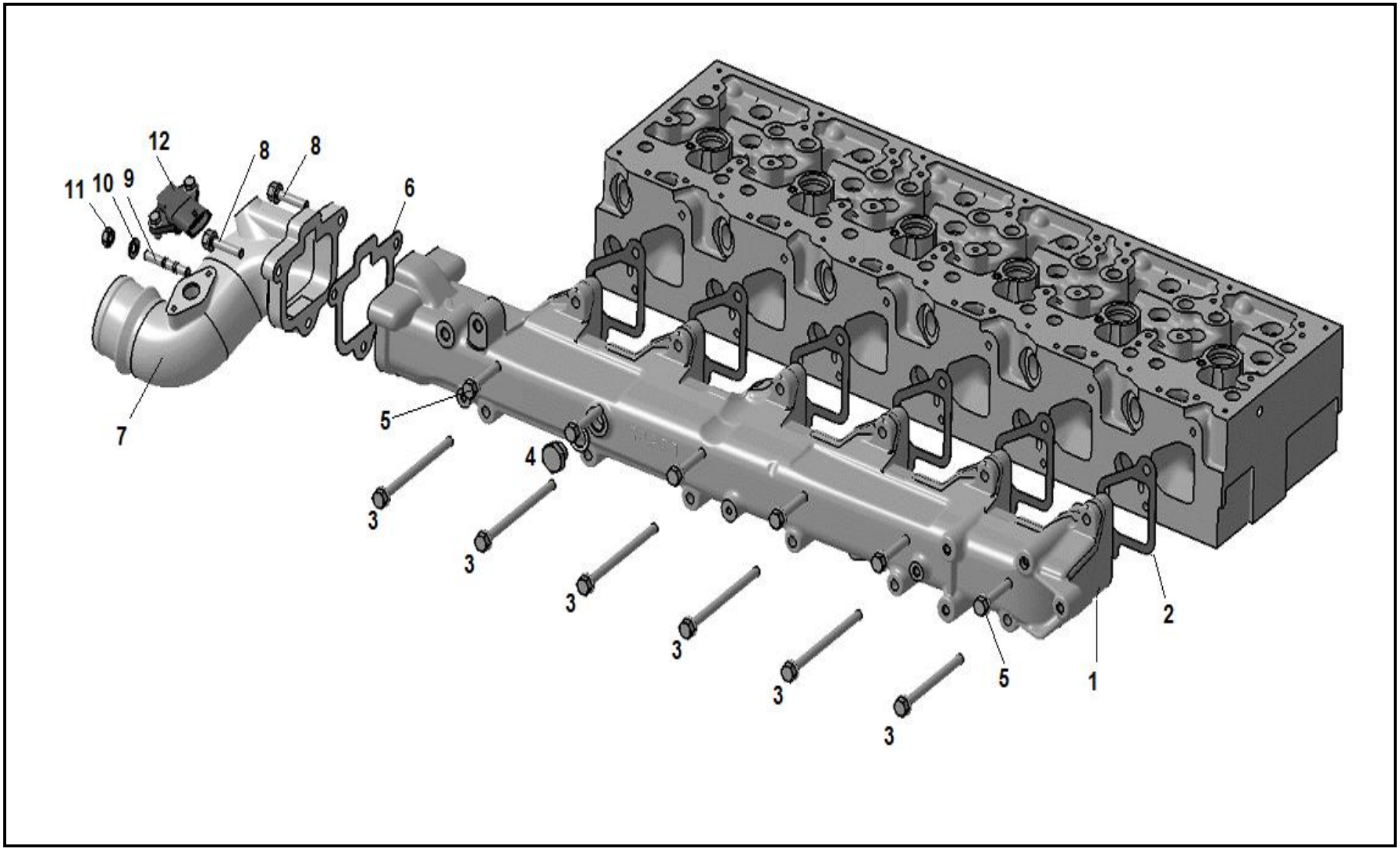

AIR INTAKE MANIFOLD

Diagram No. 144

SR	PART NO.	DESCRIPTION	QTY	APPLICABLE MODEL	REMARKS
1	64.08201-0505	AIR DISTRIBUTOR PIPE	1		
2	51.08902-0212	GASKET	6		
3	06.03216-8319	FLANGE BOLT DIN6921 M8X120	5		
3	64.90030-0063	FLANGE BOLT M8X100	1		
4	64.90490-0076	LOCKING BOLT AM 16X1.5	1		
4	06.56631-0107	SEALING RING BS-16,7X24	1		
5	64.90030-0051	FLANGE BOLT M8X45	6		
6	64.08902-0232	GASKET	1		
7	64.09412-0322	CHARGE AIR PIPE IC TO INTAKE MANIFOLD	1		
8	64.90030-0048	HEX FLANGE BOLT M8X35	2		
9	64.90201-0016	STUD M8X35	1		
10	64.90710-0026	PLAIN WASHER A8.4	1		
11	64.90501-0037	HEX NUT M8X1.25	1		
12	81.27421-0224	AMBIENT TEMPERATURE SENSOR	1		

THERMOSTAT HOUSING (2 & 4 VCR)

Diagram No. 145

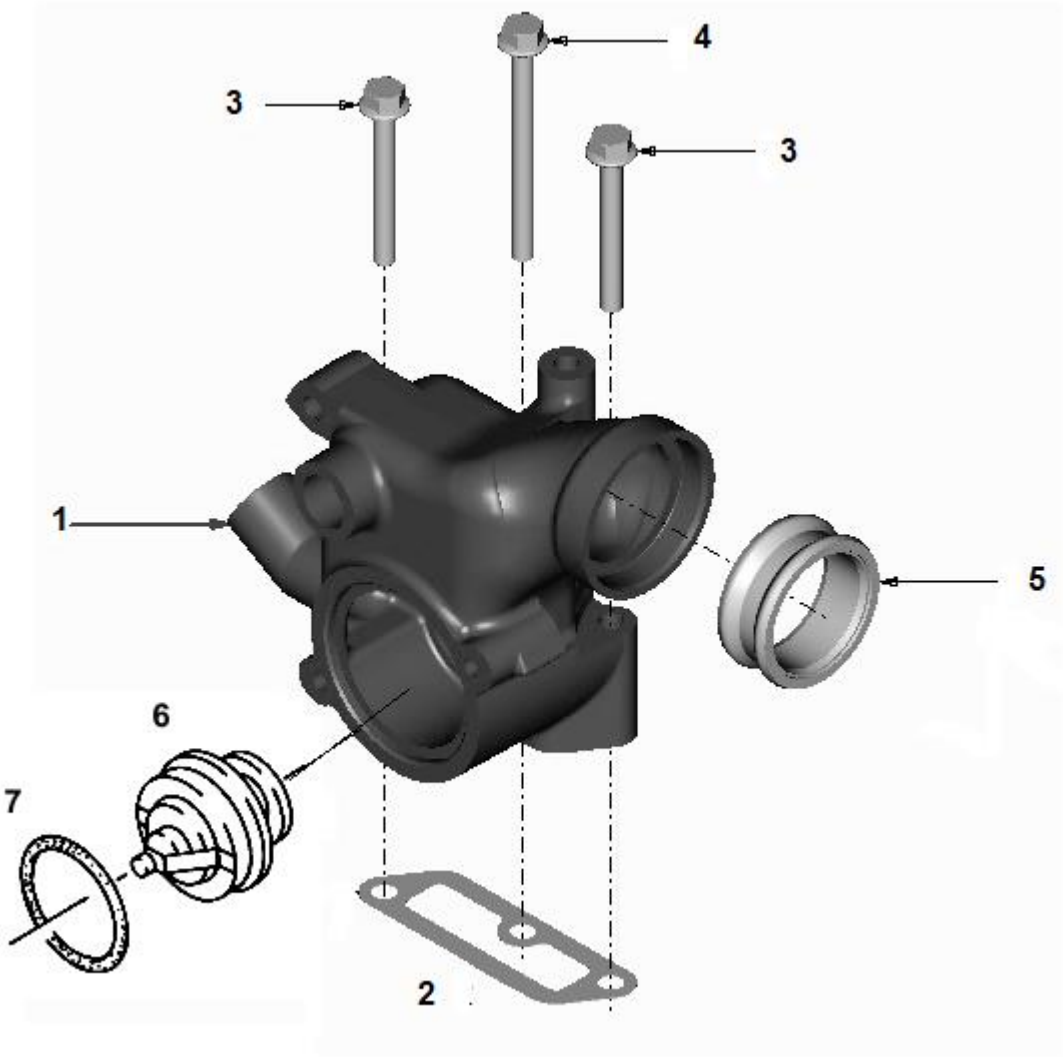

THERMOSTAT HOUSING (2 & 4 VCR) Diagram No. 145

SR	PART NO.	DESCRIPTION	QTY	APPLICABLE MODEL	REMARKS
1	51.06404-0098	THERMOSTAT HOUSING	1	FOR 2 & 4 VCR ENGINES ONLY	
2	51.06904-0044	GASKET THERMOSTAT -AF0E2-M3219	1	FOR 2 & 4 VCR ENGINES ONLY	
3	64.90030-0058	FLANGE BOLT M8X65-10.9 MAN183-B1 DIN6921	2	FOR 2 & 4 VCR ENGINES ONLY	
4	64.90030-0059	FLANGE BOLT M8X90-10.9 MAN183-B1 DIN6921	1	FOR 2 & 4 VCR ENGINES ONLY	
5	51.98182-0009	EXTENSION TUBE	1	FOR 2 & 4 VCR ENGINES ONLY	
6	51.06402-0099	THERMOSTAT ASSLY 83 DEG.	1	COMMON FOR ALL MODELS	
7	64.96501-0040	O RING 60X40 B-NBR 3-60-M7.660.60	1	COMMON FOR ALL MODELS	

INTERCOOLER ELBOW CHARGE-AIR PIPE ON TURBOCHARGER

Diagram No. 146

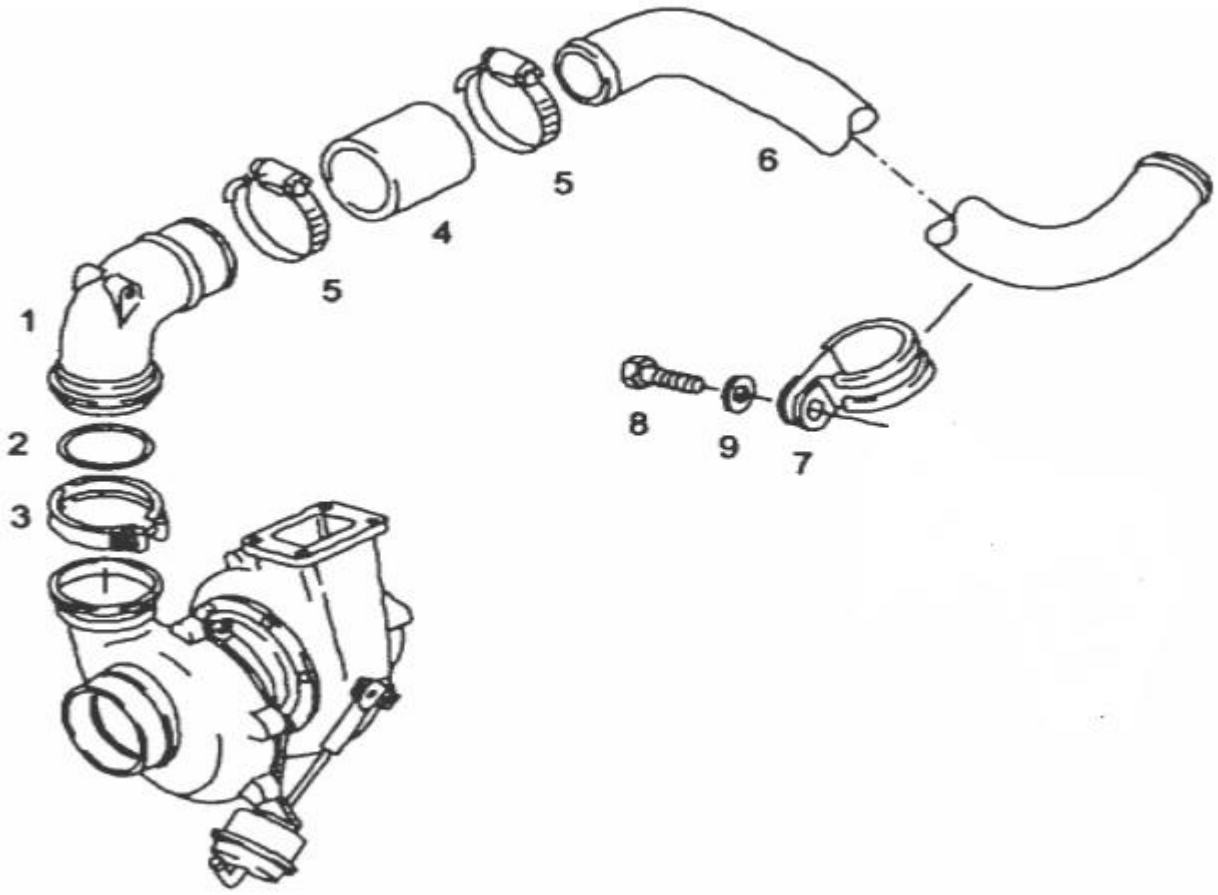

INTERCOOLER ELBOW CHARGE-AIR PIPE ON TURBOCHARGER Diagram No. 146

SR	PART NO.	DESCRIPTION	QTY	APPLICABLE MODEL	REMARKS
1	64.09411-0003	CHARGE AIR MANIFOLD (ELBOW ON TC)	1		
2	64.96501-0042	O-RING 52X3 B-FPM 1-70 M7.660.60	1		
3	51.97445-0052	HOSE CLAMP	1		
4	51.96330-0359	HOSE FOR CHARGE AIR PIPE 70MM	1		
5	64.97122-0013	HOSE CLAMP AS56-63N (SS)	2		
6	64.09412-0321	CHARGE AIR PIPE (TC TO INTERCOOLER)	1		
7	64.97445-0019	HOLDING CLAMP D1-50X25-W1-2-EPDM DIN3016	1		
8	64.90020-0097	HEX HEAD SCREW M8X30 DIN933-8.8 PHR	1		
9	64.90710-0026	PL WASHER A8.4 DIN125-ST BTS170202.12	1		

RIGID FAN WITH VISCO COUPLING AND MOUNTING PARTS

Diagram No. 147

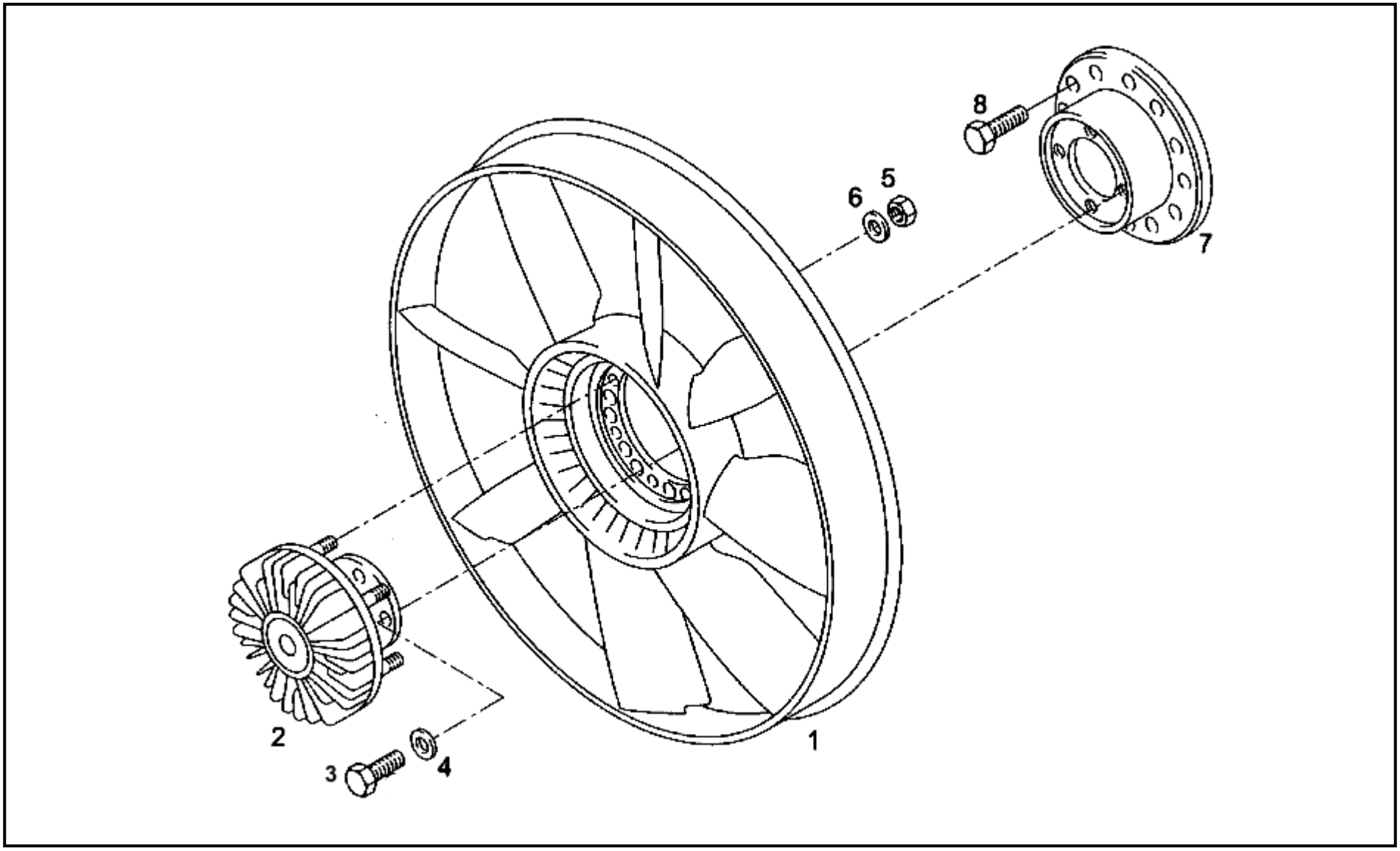

RIGID FAN WITH VISCO COUPLING AND MOUNTING PARTS Diagram No. 147

SR	PART NO.	DESCRIPTION	QTY	APPLICABLE MODEL	REMARKS
1	51.06601-0279	VISCOUS FAN DMR 704	1		
2	51.06630-0082	VISCOUS FAN CLUTCH (4VCR)	1		
3	64.90020-0093	HEX HEAD SCREW M8X20 DIN933-8.8 PHR	4		
4	64.90710-0026	PLAIN WASHER A8.4 DIN125-ST A3C	4		
5	64.90501-0037	HEX NUT M8X1.25 DIN934-8 A3C	6		
6	64.90710-0026	PLAIN WASHER A8.4 DIN125-ST A3C	6		
7	64.06611-0001	COUPLING FLANGE FOR FAN (FAN SPACER)	1		
8	64.90020-0093	HEX HEAD SCREW M8X20 DIN933-8.8 PHR	6		

EXHAUST ELBOW AND HEAT PROTECTION PLATE

Diagram No. 148

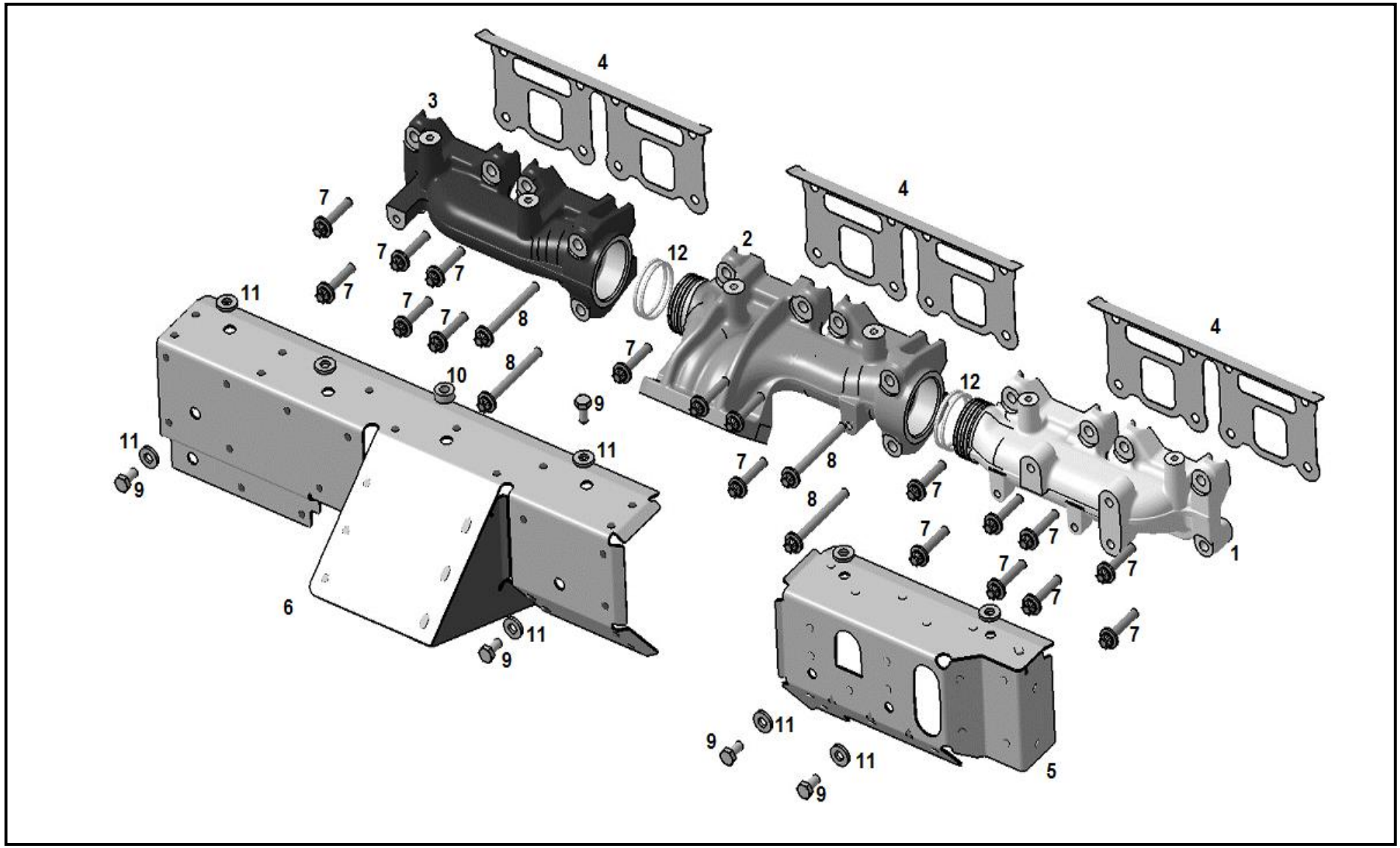

EXHAUST ELBOW AND HEAT PROTECTION PLATE

Diagram No. 148

SR	PART NO.	DESCRIPTION	QTY	APPLICABLE MODEL	REMARKS
1	51.08101-6327	EXHAUST MANIFOLD CYL. 1-2	1		
2	64.08102-0658	EXHAUST MANIFOLD CYL. 3-4	1		
3	51.08102-0253	EXHAUST MANIFOLD CYL. 5-6	1		
4	51.08901-0269	GASKET	3		
5	51.08120-5284	HEAT PROTECTION PLATE	1		
6	51.08120-5285	HEAT PROTECTION PLATE	1		
7	51.90490-0102	TORX SCREW M8X40 WF	18		
8	51.90490-0090	TORX SCREW M8X80 HWF	4		
9	64.90020-0175	HEX SCREW M8X16	5		
10	64.91701-0004	BUSH	1		
11	64.90710-0002	WASHER D9/19/3	9		
12	51.98701-0085	MULTI DISC RING (FOR EXHAUST MANIFOLD)	4		

COMMON RAIL INJECTION SYSTEM

Diagram No. 149

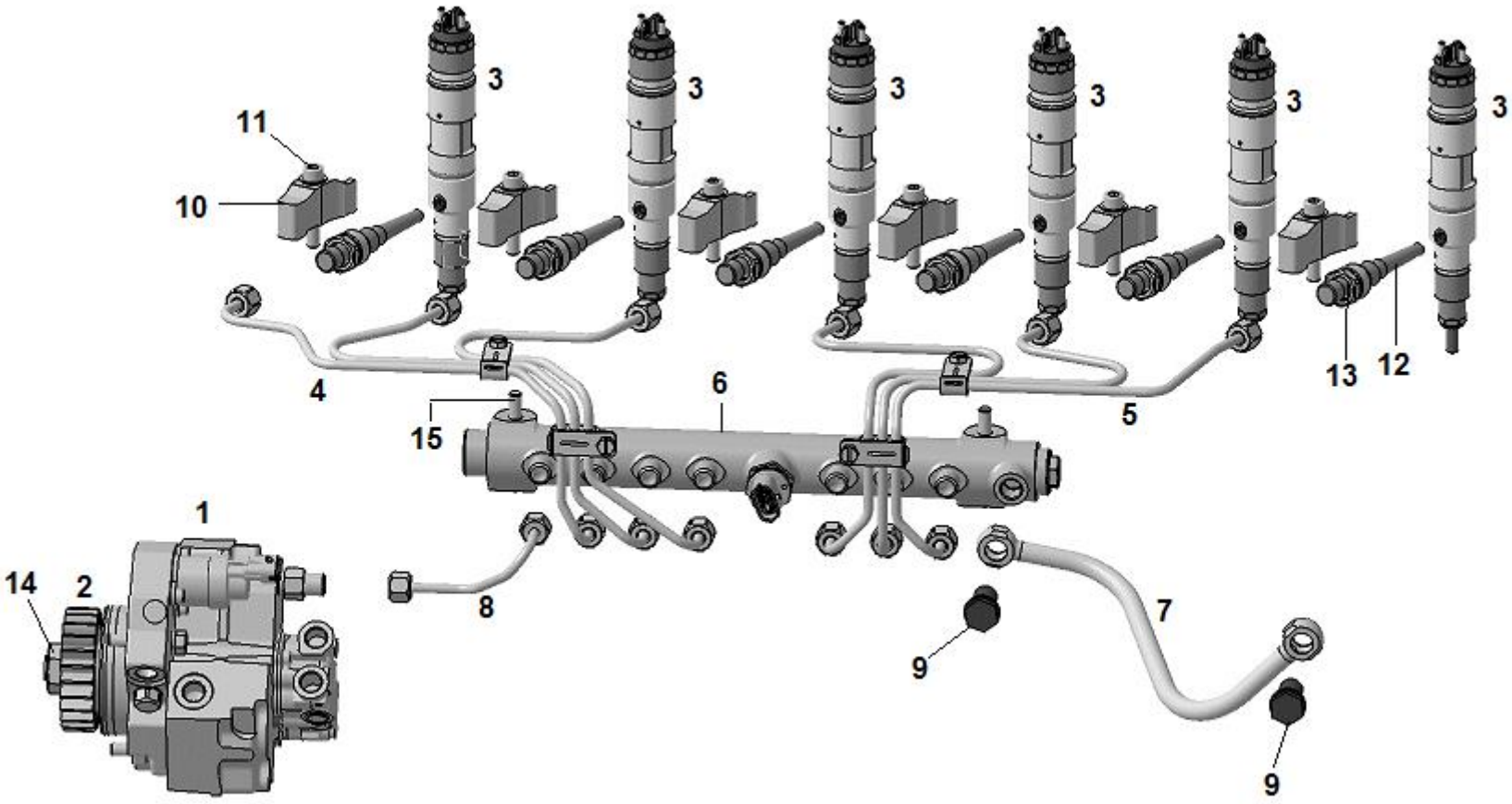

COMMON RAIL INJECTION SYSTEM

Diagram No. 149

SR	PART NO.	DESCRIPTION	QTY	APPLICABLE MODEL	REMARKS
1	51.11103-7849	PRESSURE PUMP CP 3.3 (AWP)	1		
2	64.11301-0276	FIP DRIVE GEAR	1		
3	51.10100-6115	INJECTOR WITH SMALLER THROUGH FLOW	6		
4	51.10301-6176	HIGH PRESSURE PIPES CYL. 1-3	1		
5	51.10301-6177	HIGH PRESSURE PIPES CYL. 4-6	1		
6	64.10311-6002	COMMON RAIL - 6 CYL	1		51.10311-6063 ALTERNATE
7	51.12305-7001	LEAK OIL PRESSURE LIMITING VALVE RETURN	1		
8	64.10304-0583	INJECTION LINE HDP-RAIL	1		
9	51.98150-0175	BANJO BOLT	2		
9	06.56631-0106	SEALING RING	4		
10	51.10104-0056	INJECTOR HOLDING CLAMP	6		
11	06.02191-0413	HEX BOLT DIN912-M8X45-10.9	6		
11	64.91710-0064	WASHER DIN 6319	6		
12	51.10301-6159	PRESSURE PIPE NECK	6		
13	51.10108-0013	THRUST NUT	6		
14	64.90501-0040	HEX NUT M18X1.5	1		
15	06.03216-8311	HEX SCREW DIN6921-M8X55-10.9	2		

INJECTOR (4 VCR)

Diagram No. 150

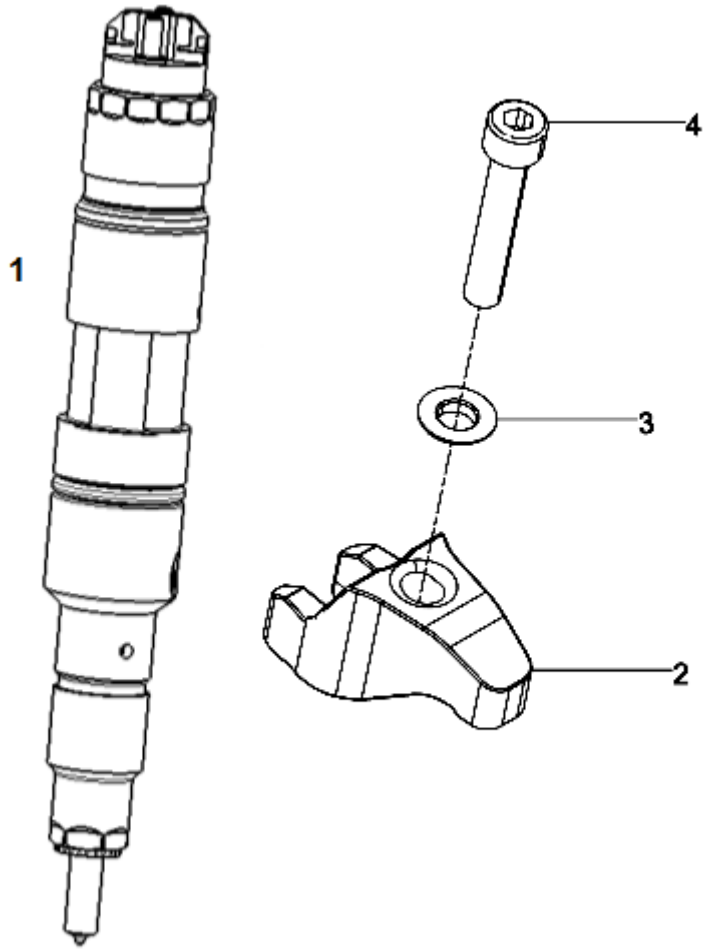

INJECTOR (4 VCR)

Diagram No. 150

SR	PART NO.	DESCRIPTION	QTY	APPLICABLE MODEL	REMARKS
1	51.10100-6115	INJECTOR	6		
2	51.10104-0056	INJECTOR HOLDING CLAMP	6		
3	64.91710-0064	WASHER DIN 6319-C 8.4 ZNPHR3F	6		
4	06.02191-0413	HEX BOLT DIN912-M8X45-10.9-MAN183-PHR	6		

COMPONENTS FOR FUEL LINES

Diagram No. 151

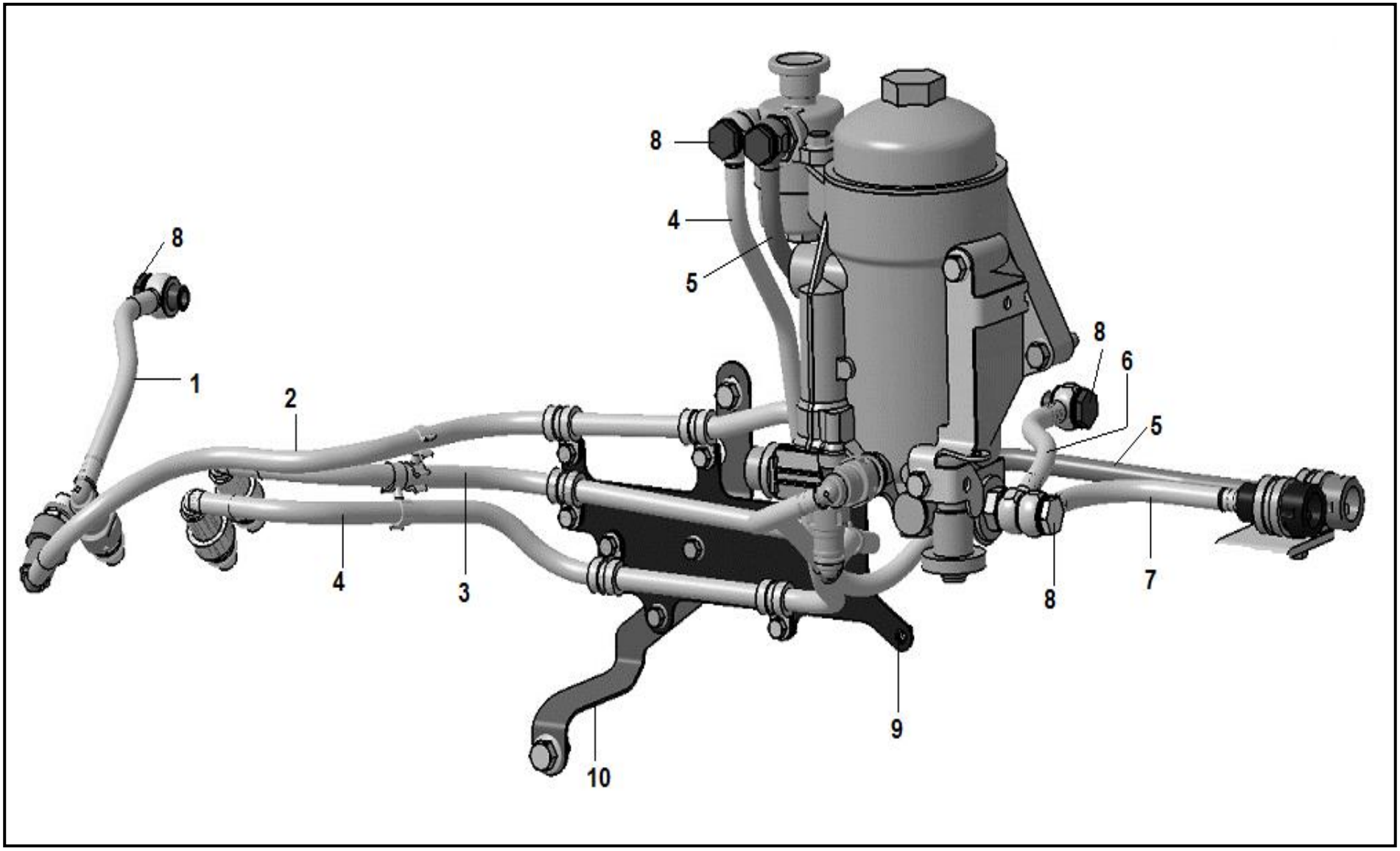

COMPONENTS FOR FUEL LINES

Diagram No. 151

SR	PART NO.	DESCRIPTION	QTY	APPLICABLE MODEL	REMARKS
1	64.12305-5485	FUEL PIPE HIGH PRESSURE PUMP RETURN	1		
2	64.12308-5037	FUEL PIPE (FILTER TO HPP)	1		
3	64.12308-5036	FUEL PIPE,FEED PUMP TO FILTER	1		
4	64.12308-5035	FUEL PIPE PRE-FILTER TO FEED PUMP	1		
5	64.12308-5034	FUEL PIPE, PRE-FILTER INLET	1		
6	64.12305-5486	FUEL PIPE,INJECTOR RETURN TO FILTER	1		
7	64.12305-5487	FUEL PIPE, FUEL FILTER TO TANK	1		
8	51.98150-0175	BANJO BOLT	5		
9	64.12340-5061	BRACKET FOR FUEL PIPE	1		
10	64.12340-5060	BRACKET ASSLY FUEL PIPES ON CRANK CASE	1		ALTERNATE 51.12340-5039
10	06.03216-8202	FLANGE BOLT DIN 6921 M6X12	11	FOR SR NO 9 & 10	

OIL SUPPLY PIPE

Diagram No. 152

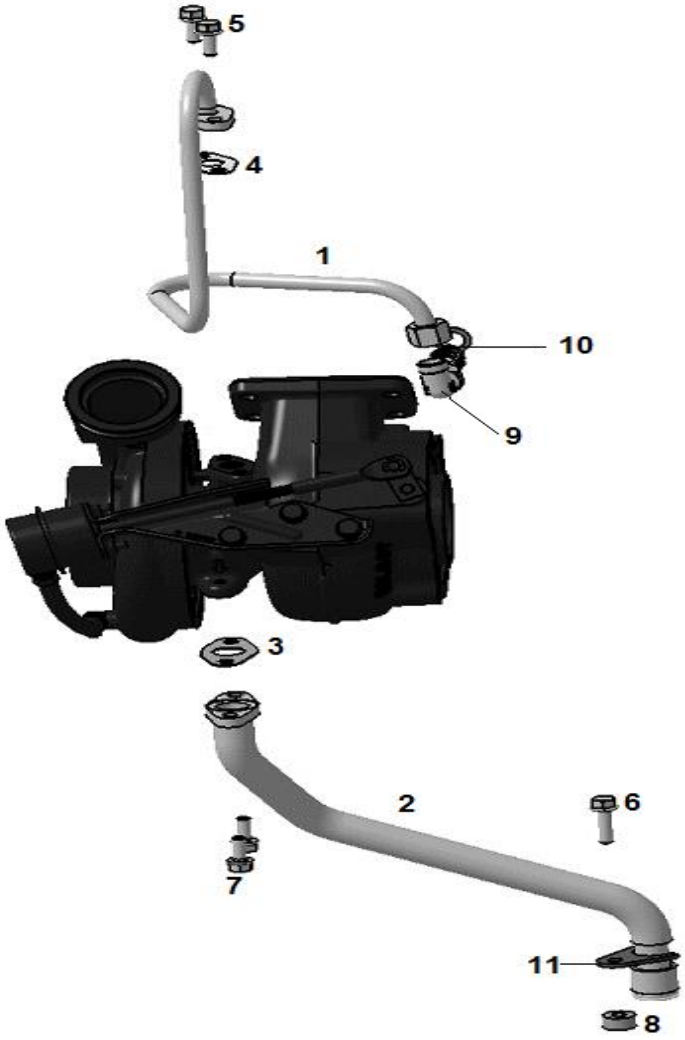

OIL SUPPLY PIPE

Diagram No. 152

SR	PART NO.	DESCRIPTION	QTY	APPLICABLE MODEL	REMARKS
1	51.05703-5593	OIL INLET PIPE	1		
2	51.05701-0379	OIL RETURN PIPE	1		ALTERNATE 51.05703-5291
3	64.96601-0001	GASKET (TURBO DRAIN PIPE)	1		
4	51.96601-0577	GASKET	1		
5	64.90030-0060	FLANGE BOLT M8X20	2		
6	64.90030-0033	HEX SCREW M8X30	1		
7	64.90030-0060	FLANGE BOLT M8X20	2		
8	64.93030-0112	BUSH	1		
8	64.96501-0033	O RING 23X3	1		
9	06.71230-2104	ELBOW UNION	1		
10	64.98110-0023	SCREW FITTING TURBO	1		
10	06.56631-0106	SEALING RING	1		

TURBOCHARGER (4 VCR) **Diagram No. 153**

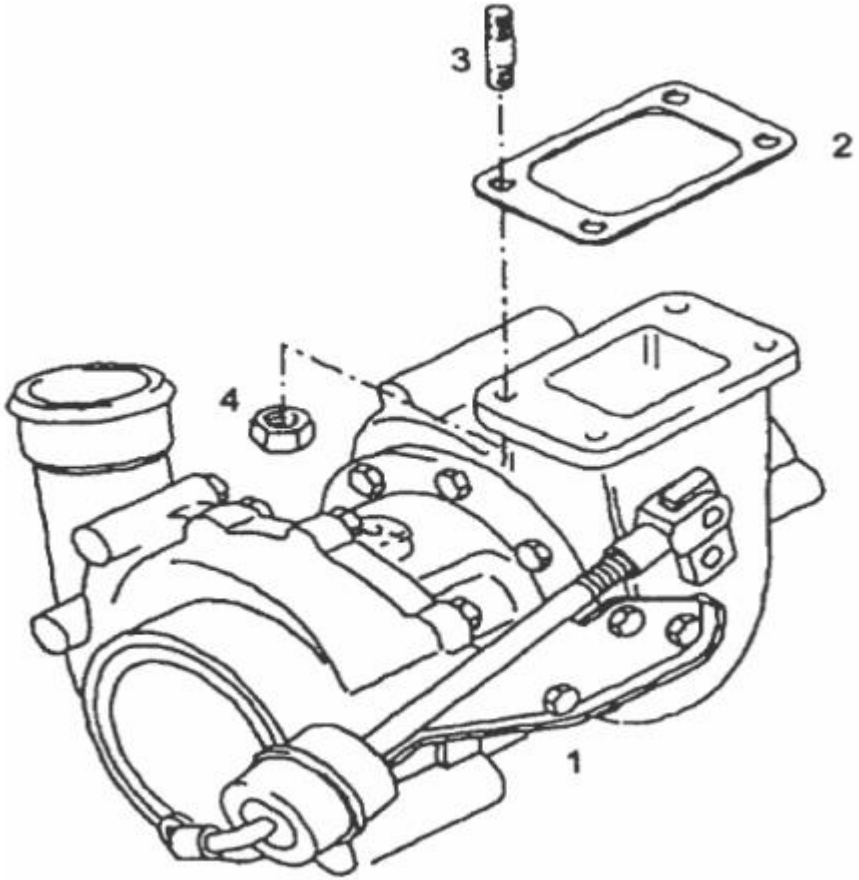

TURBOCHARGER (4 VCR)

Diagram No. 153

SR	PART NO.	DESCRIPTION	QTY	APPLICABLE MODEL	REMARKS
1	51.09100-7575	TURBO CHARGER	1		
2	64.09901-0001	GASKET - TURBO CHARGER	1		51.09901-0051 ALTERNATE
3	51.90201-0251	STUD M10X25-SD	4		
4	64.90501-0060	HEX NUT AM10-10-A3C M7.112.60	4		

ENGINE HARNESS TRAY (4 VCR)

Diagram No. 154

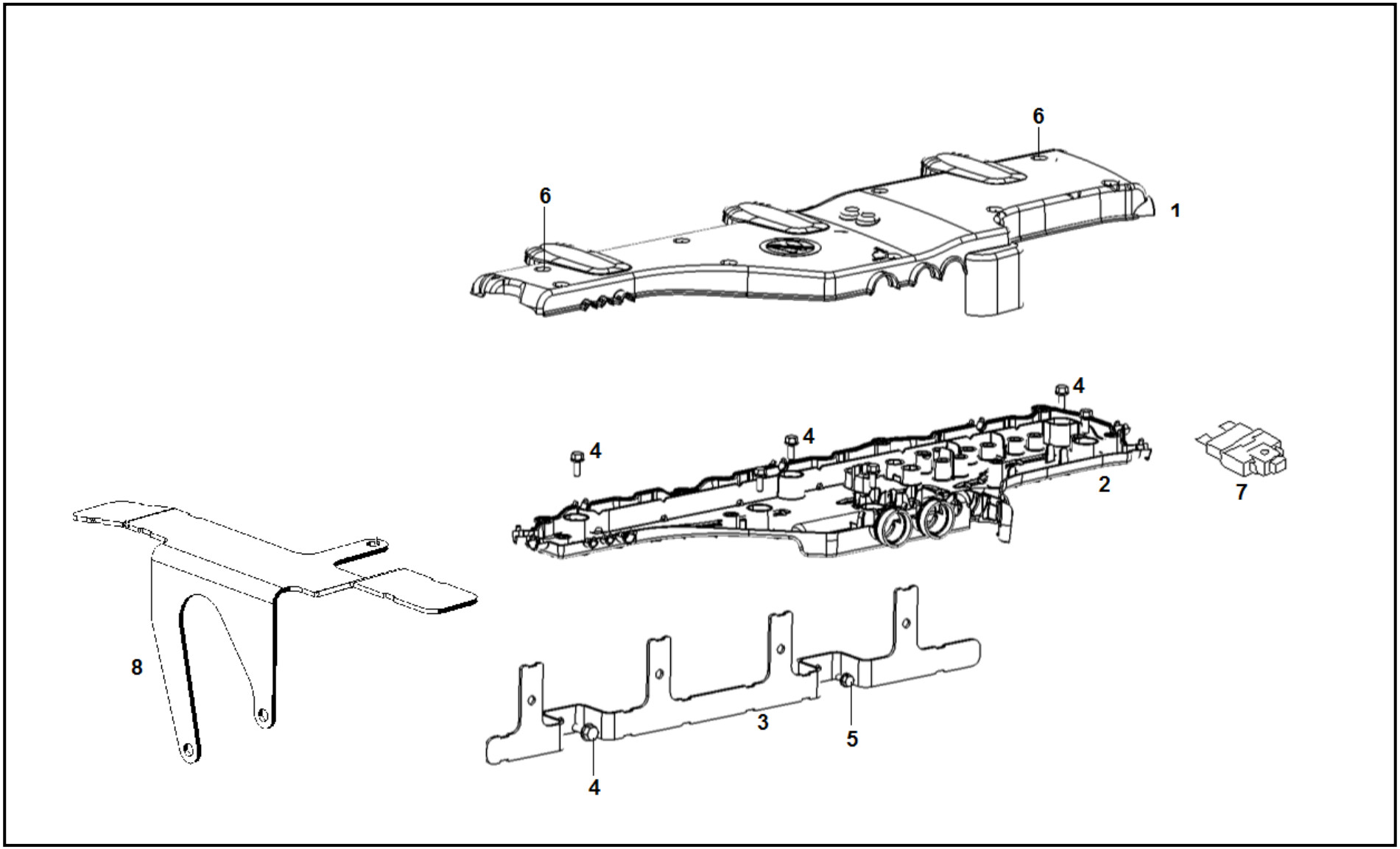

ENGINE HARNESS TRAY (4 VCR)

Diagram No. 154

SR	PART NO.	DESCRIPTION	QTY	APPLICABLE MODEL	REMARKS
1	85.25424-0006	HARNESS TRAY UPPER	1		
2	64.25424-6040	CABLE TRAY W HARNESS EDC17 W/O FLAME START	1		
3	64.25441-0731	BRACKET WIRING HARNESS SUPPORT	1		
4	64.90020-0176	HEX. SCREW M6X16 DIN 933-8.8 MAN183-B1	7		
5	64.90030-0060	FLANGE BOLT M8X20-10.9 MAN183-B1 DIN6921	1		
6	64.90030-0048	HEX FLANGE BOLT M8X35 DIN 6921	6		
7	07.93810-0006	FUSE 25A	1		FUSE FITTED IN HARNESS TRAY
8	64.25441-0732	BRACKET WIRING HARNESS SUPPORT	1		

ALTERNATOR MOUNTING & BELT (2 & 4 VCR)

Diagram No. 155

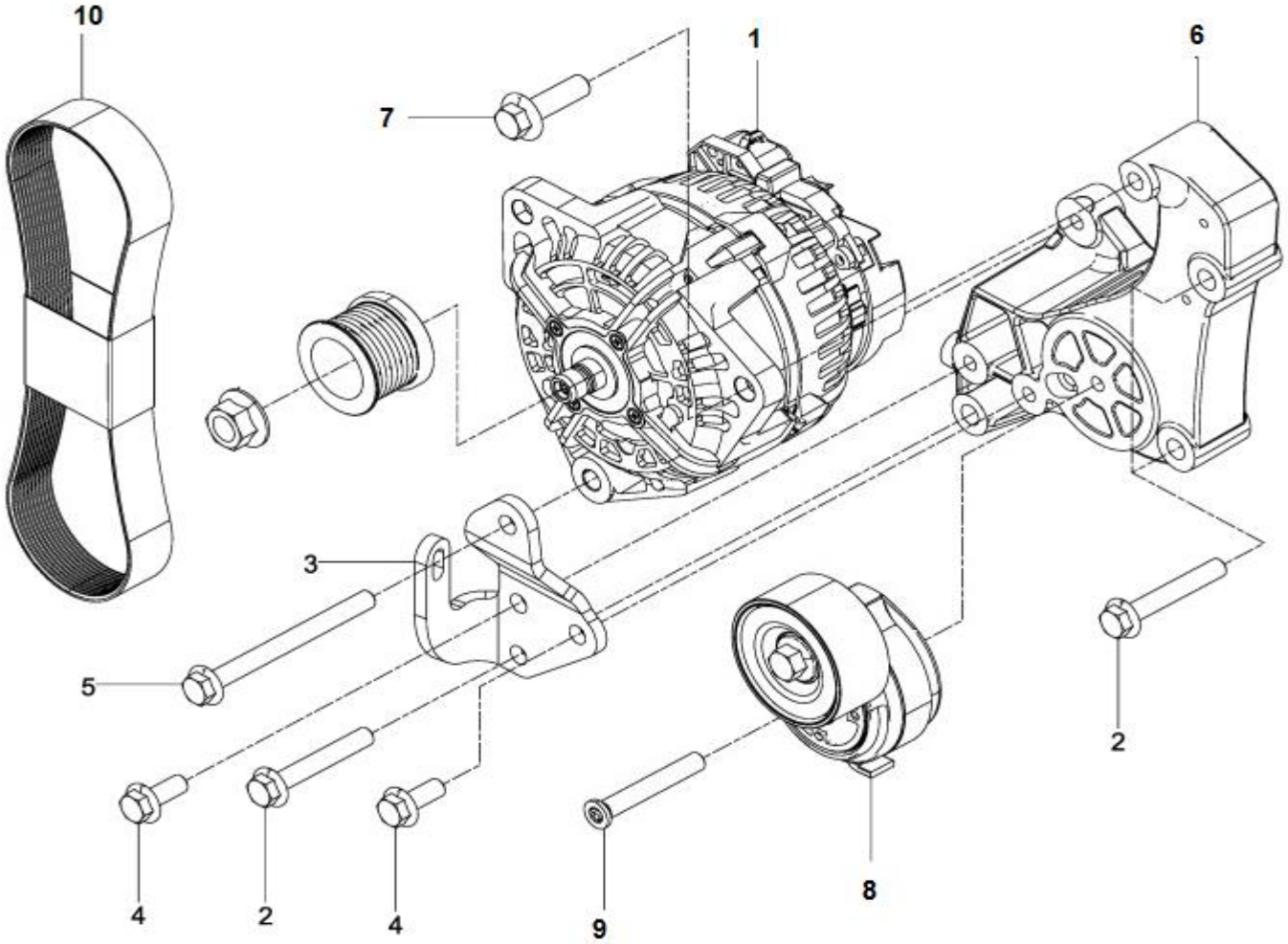

ALTERNATOR MOUNTING & BELT (2 & 4 VCR) Diagram No. 155

SR	PART NO.	DESCRIPTION	QTY	APPLICABLE MODEL	REMARKS
1	64.26101-7004	ALTERNATOR – 80A (2VCR)	1	FOR 2 & 4 VCR ENGINES ONLY	
2	64.90030-0053	FLANGE BOLT M10X65-10.9 MAN183B1 DIN6921	3	FOR 2 & 4 VCR ENGINES ONLY	
3	64.19101-0515	ALTERNATOR MOUNTING BKT	1	FOR 2 & 4 VCR ENGINES ONLY	
4	06.03216-8405	BOLT M10X25-10.9 MAN183-B1 DIN 6921	2	FOR 2 & 4 VCR ENGINES ONLY	
5	64.90030-0055	FLANGEBOLT M10X110-10.9 MAN183B1 DIN6921	1	FOR 2 & 4 VCR ENGINES ONLY	
6	64.19101-0515	ALTERNATOR SUPPORT BRACKET	1	FOR 2 & 4 VCR ENGINES ONLY	
7	64.90030-0056	FLANGE BOLT M12X40-10.9 MAN183B1 DIN6921	1	FOR 2 & 4 VCR ENGINES ONLY	
8	51.95800-7499	AUTOMATIC BELT TENSIONER	1	FOR 2 & 4 VCR ENGINES ONLY	
9	64.90040-0052	C. S BOLT - ALTERNATOR M10X70- 10.9	1	FOR 2 & 4 VCR ENGINES ONLY	
10	51.96820-0243	POLY V BELT 8X1275	1	FOR 2 & 4 VCR ENGINES ONLY	

AIR COMPRESSOR & STEERING MOUNTING PUMP

Diagram No. 156

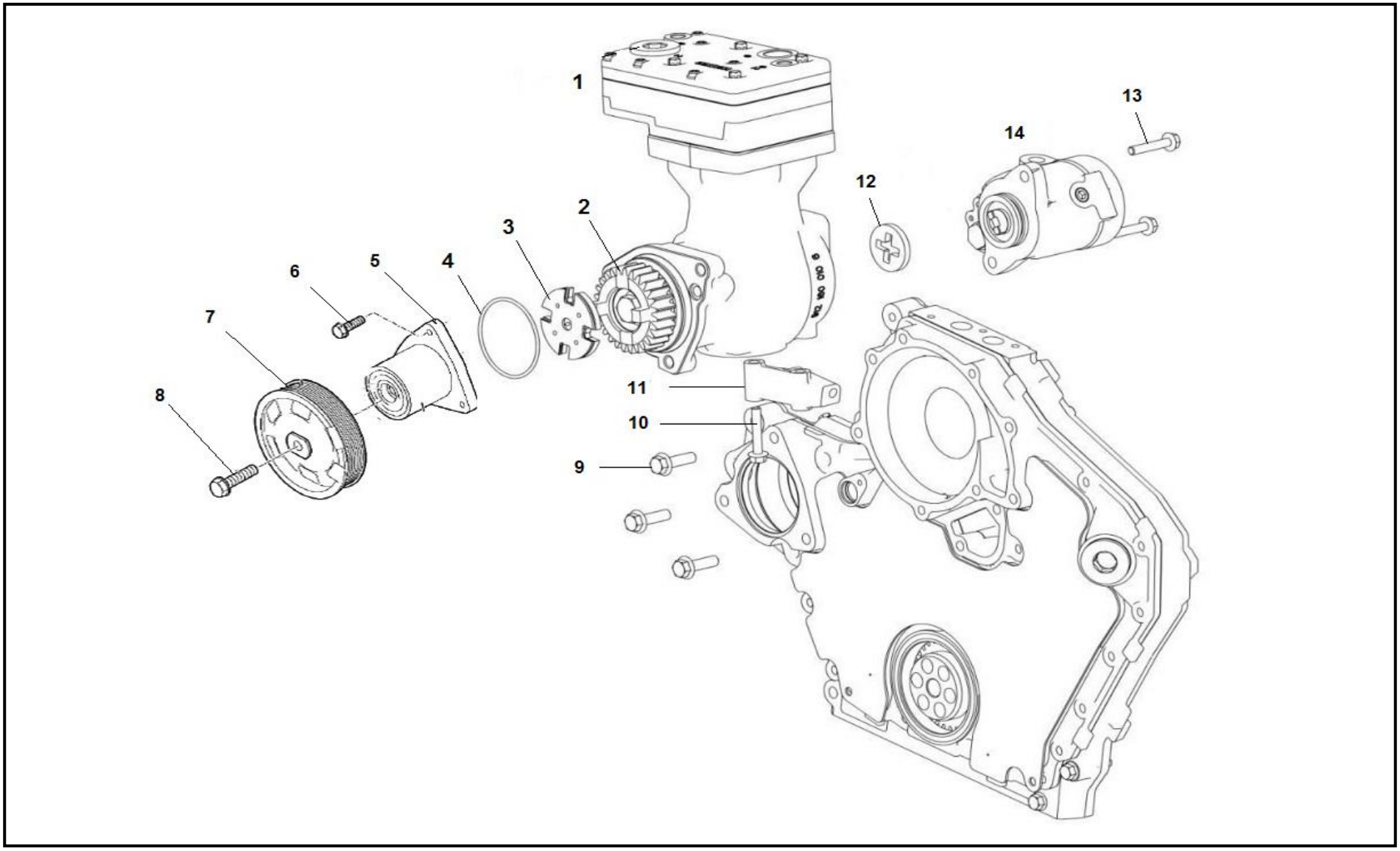

AIR COMPRESSOR & STEERING MOUNTING PUMP

Diagram No. 156

SR	PART NO.	DESCRIPTION	QTY	APPLICABLE MODEL	REMARKS
1	64.54101-7004	AIR COMPRESSOR 318 CC	1		SUPERCEDED BY 64.54100-7238
2	64.54210-0236	DRIVE GEAR FOR AIR COMPRESSOR	1		FOR 2 VCR & 4 VCR ENGINES WITH 318 CC AIR COMPRESSOR
3	51.47104-0040	CARRIER PLATE	1		
4	64.96501-0063	O RING 85X3 N-FPM 1-70 MAN 356	1		
5	64.38500-6207	ASSEMBLY ENGINE FRONT PTO DRIVE	1		
6	64.90030-0067	BOLT M10X35-10.9 MAN183-B1 DIN 6921	3		
7	64.95820-0126	PULLEY	1		
8	06.01783-8514	HEX SCREW M16X1.5LHX45-8.8 DIN 961	1		64.90020-0406 ALTERNATE
9	64.90020-0157	HEX SCREW M8X45-8.8 MAN183 PHR DIN	2		
10	64.90020-0073	HHB M8X60 DIN 931-8.8 BTS 170102-20	1		
11	64.54302-0002	SUPPORT PIECE FOR COMPRESSOR	1		
12	64.47104-0001	INTERMEDIATE DRIVE PIECE	1	COMMON FOR ALL MODELS	
13	64.90030-0027	SHS M10X30 DIN 912-12.9 BTS:170202.22	2	COMMON FOR ALL MODELS	
14	64.47101-6001	POWER STEERING PUMP	1	FOR 4X2 , 6X2 & 6X4 MODELS	
14	81.47101-6137	POWER STEERING PUMP	1	FOR 8X4 & 8X2 MODELS	

ACCELERATOR PEDAL

Diagram No.157

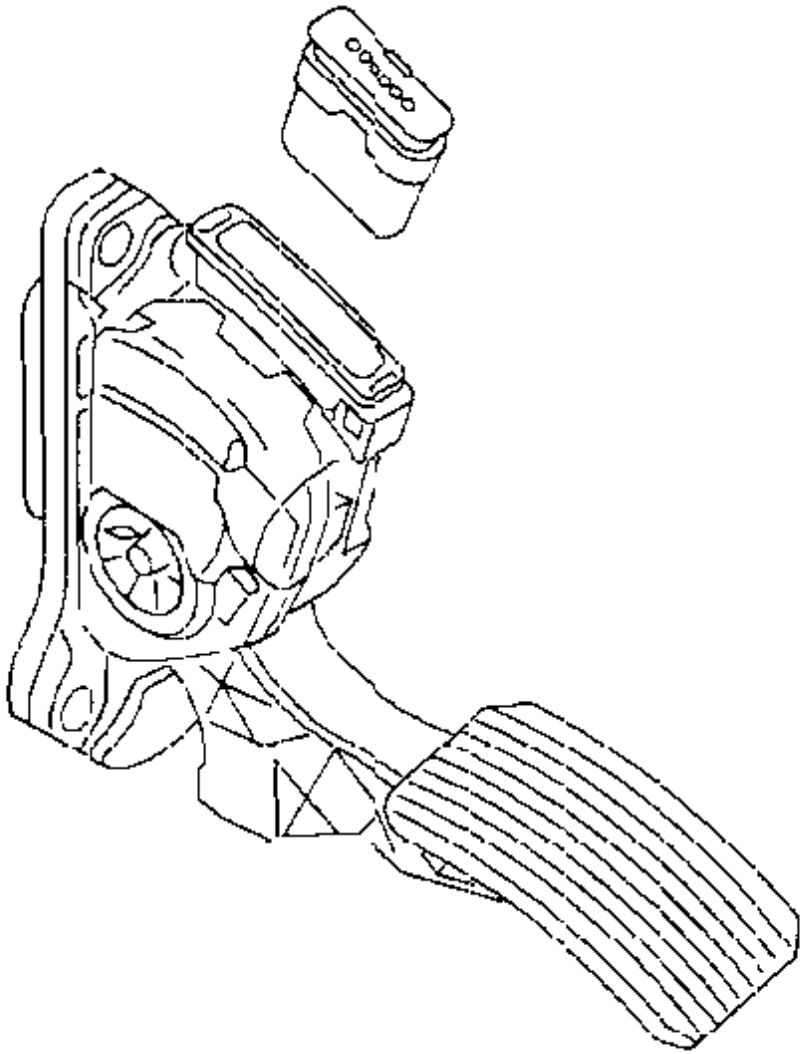

ACCELERATOR PEDAL

Diagram No.157

SR	PART NO.	DESCRIPTION	QTY	APPLICABLE MODEL	REMARKS
1	81.25970-6106	ACCELERATOR PEDAL WITH SENSOR	1		

ELECTRONIC CONTROL UNIT (4 VCR)

Diagram No.158

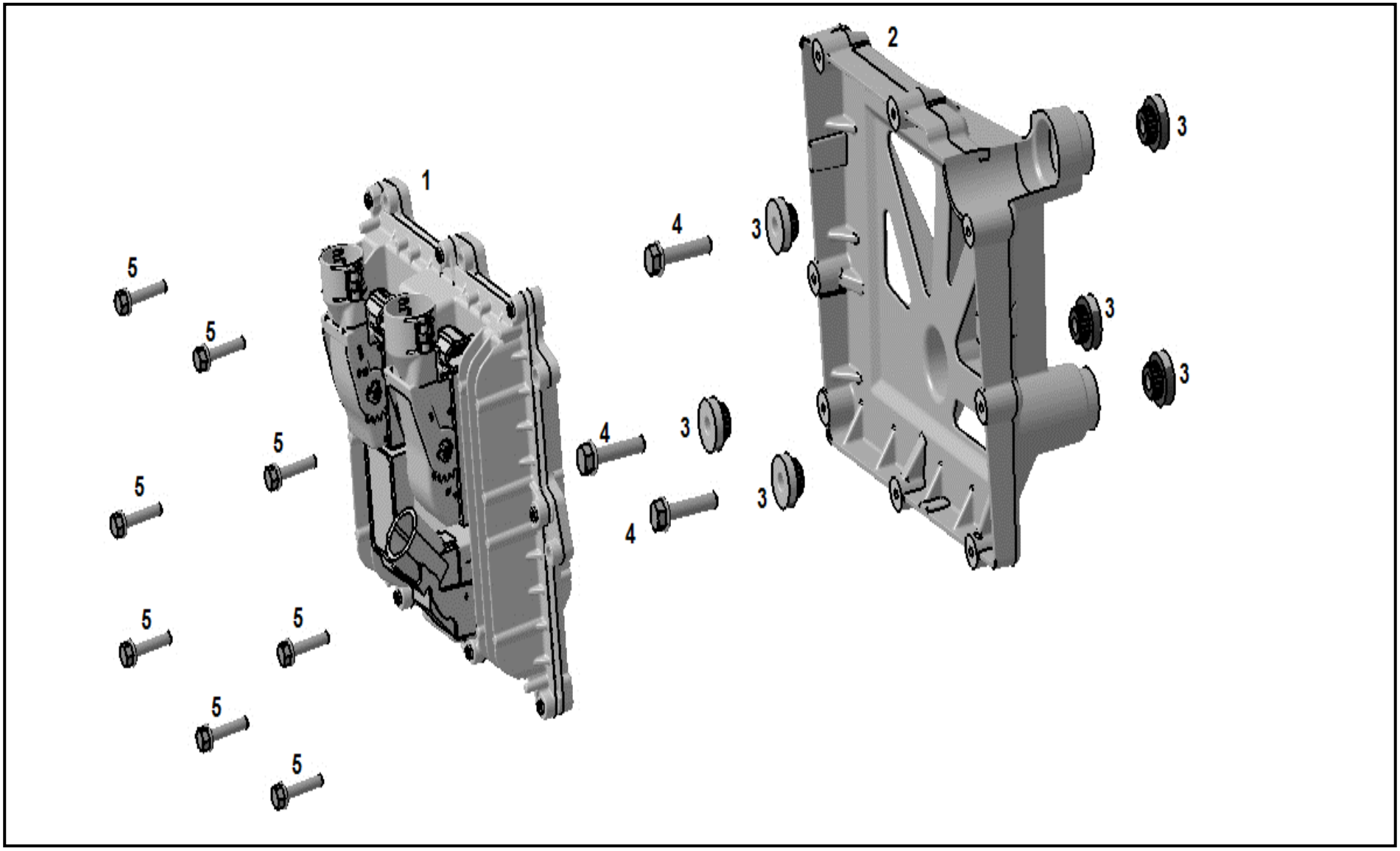

ELECTRONIC CONTROL UNIT (4 VCR) Diagram No. 158

SR	PART NO.	DESCRIPTION	QTY	APPLICABLE MODEL	REMARKS
1	64.25804-7268	ELECTRONIC DIESEL CONTROL UNIT D0836LF20	1		
2	64.11640-0343	ECU MOUNTING TRAY M/C	1		ALTERNATE 64.11640-6029
3	51.96210-0077	RUBBER BUFFER	6		
4	64.90030-0062	FLANGE BOLT M8X40	3		
5	64.90030-0064	FLANGE BOLT M6X30	8		

EXHAUST ELBOW (4 VCR)

Diagram No. 159

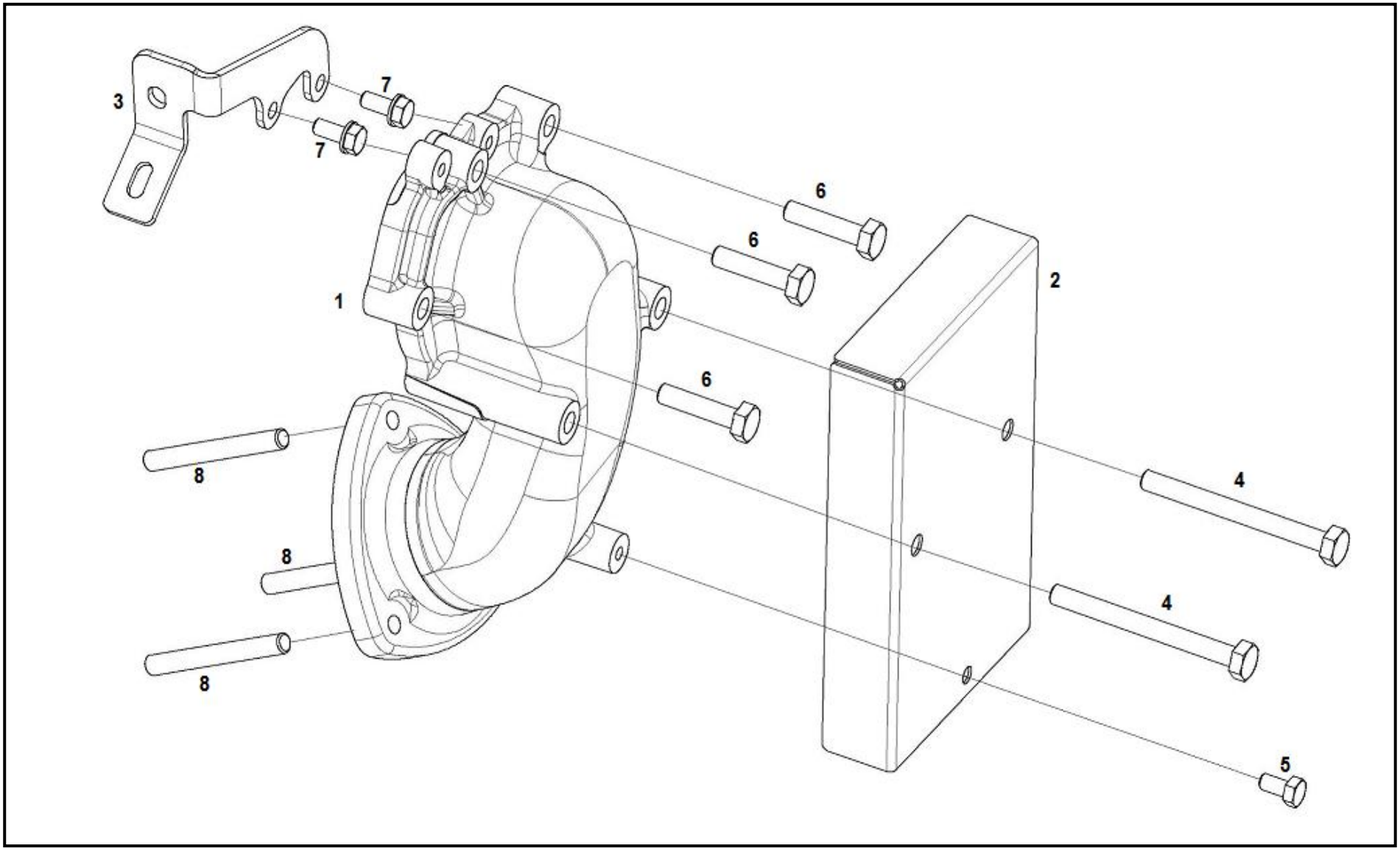

EXHAUST ELBOW (4 VCR)

Diagram No. 159

SR	PART NO.	DESCRIPTION	QTY	APPLICABLE MODEL	REMARKS
1	64.15201-0256	EXHAUST ELBOW	1		51.15201-0093 ALTERNATE
2	64.15215-0067	HEAT PROTECTION PLATE	1		51.15215-0050 ALTERNATE
3	64.09440-0288	SUPPORT BKT FOR TC TO INTERCOOLER PIPE	1		
4	51.90001-0126	HEX BOLT	2		
5	64.90020-0175	HEX SCREW M8X16-8.8 C3J DIN 933	1		
6	51.90001-0127	HEX BOLT	3		
7	06.01289-0272	HEX SCREW DIN933-M8X20-8.8-C3J	2		
8	51.90210-0014	STUD	3		

ENGINE SUPPORT FRONT AND PLATE

Diagram No. 160

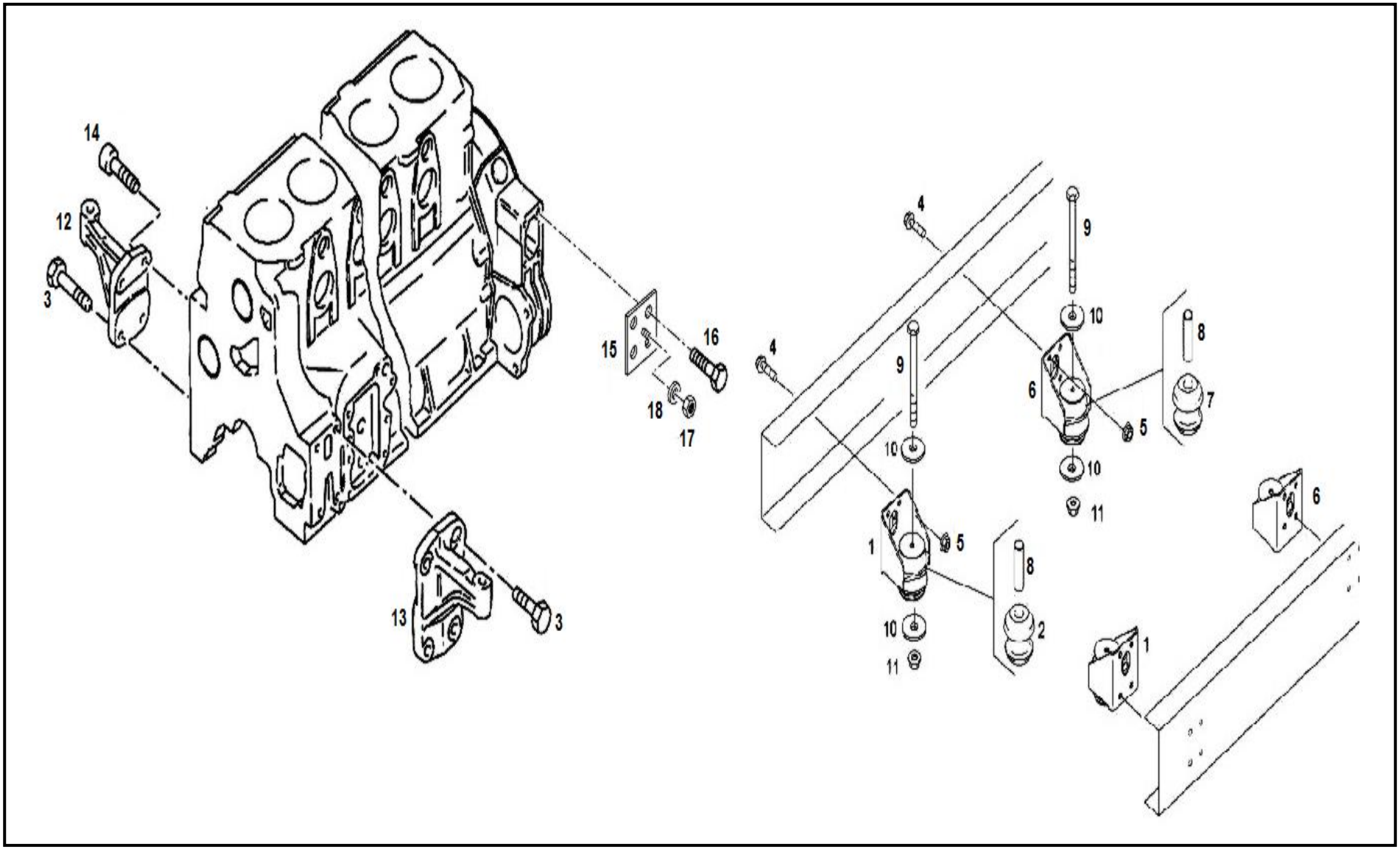

ENGINE SUPPORT FRONT AND PLATE

Diagram No. 160

SR	PART NO.	DESCRIPTION	QTY	APPLICABLE MODEL	REMARKS
1	64.41506-6001	ENGINE MTG BKT SUB ASSY	2	CONSISTS OF SR 1A , 2 & 8	
1A	64.41506-5001	ENGINE MTG BKT ASSLY	2		
2	64.96020-0003	ENGINE MTG RUBBER BUFFER	2		
3	64.90020-0212	HEX SCREW M12X30-100MAN183-PHR M7.012.04	7		
4	64.90020-0014	SCREW M12X1.5X35-10.9, M701204-MAN183B1	1		
5	64.90501-0012	NUT M12X1.5-10 , M7.112.40-MAN183B1	4		
6	64.41506-6003	GEAR BOX MTG BKT SUB ASSY FOR OFFSET CHS	2	CONSISTS OF 6A , 7 & 8	
6A	64.41506-5004	GEAR BOX MTG BKT ASSY	2		
7	81.96210-0598	GEAR BOX MTG RUBBER BUFFER	2		
8	64.94299-0006	MTG SPACER (POWER PACK)	2		
9	64.90020-0101	BOLT M12X1.5X175-10.9, JIS B1189 - PHR	2		
10	64.94299-0005	SPACER (POWER PACK MTG)	2		
11	64.90501-0023	NUT AM12X1.5-10, M7.112.60 , A3C	4		
12	64.19210-0003	ENGINE MTG BRACKET (FRONT) EXHAUST SIDE	1		
13	64.19210-0002	ENGINE MTG BRACKET (FRONT) INLET SIDE	1		
14	64.90030-0028	SCREW M12X30-10.9-MAN183-PHR DIN 912	1		
15	64.19240-5001	ASSY EARTHING PLATE FOR SAE-1 HSG	1		
16	64.90001-0001	HHB M16X1.5X40 DIN 933-8.8 A3C	5		

17	64.90501-0038	HEX NUT M10X1.5-8 IS1364 PT.III A3C	1		
18	64.90710-0027	PLAIN WASHER A10.5 DIN125-ST A3C	1		
Page No. 164		**REVISION NO. 001**			**VERSION: 001**

GEARBOX SUPPORT

Diagram No. 161

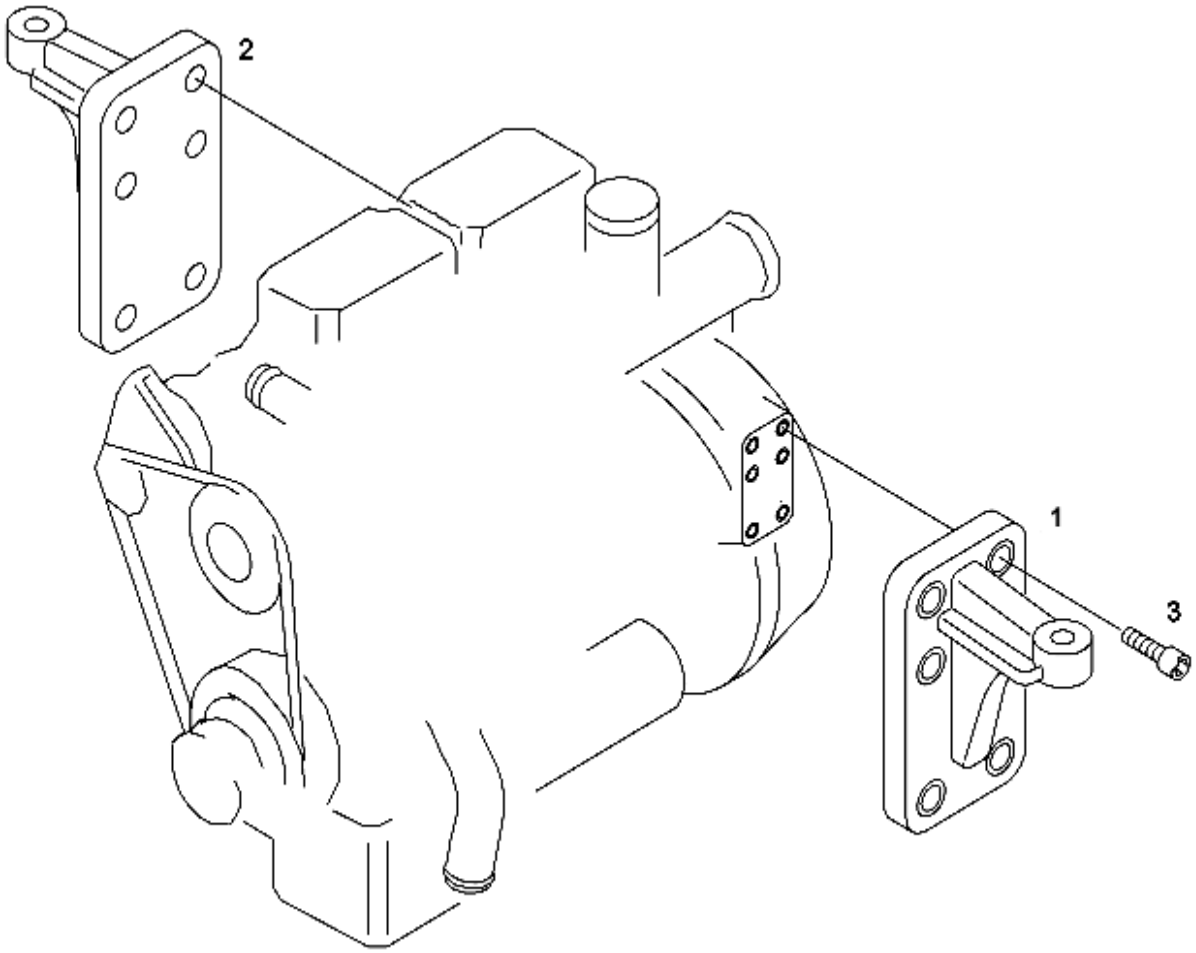

GEARBOX SUPPORT

Diagram No. 161

SR	PART NO.	DESCRIPTION	QTY	APPLICABLE MODEL	REMARKS
1	64.41307-0004	GEAR BOX MTG BKT LH	1		
2	64.41307-0005	GEAR BOX MOUNTING BKT- RH (MACHINING)	1		
3	64.90490-0005	BOLT M16X2X40 DIN912-10.9 A3C	12		

LIFTING EYE LATERAL FRONT

Diagram No. 162

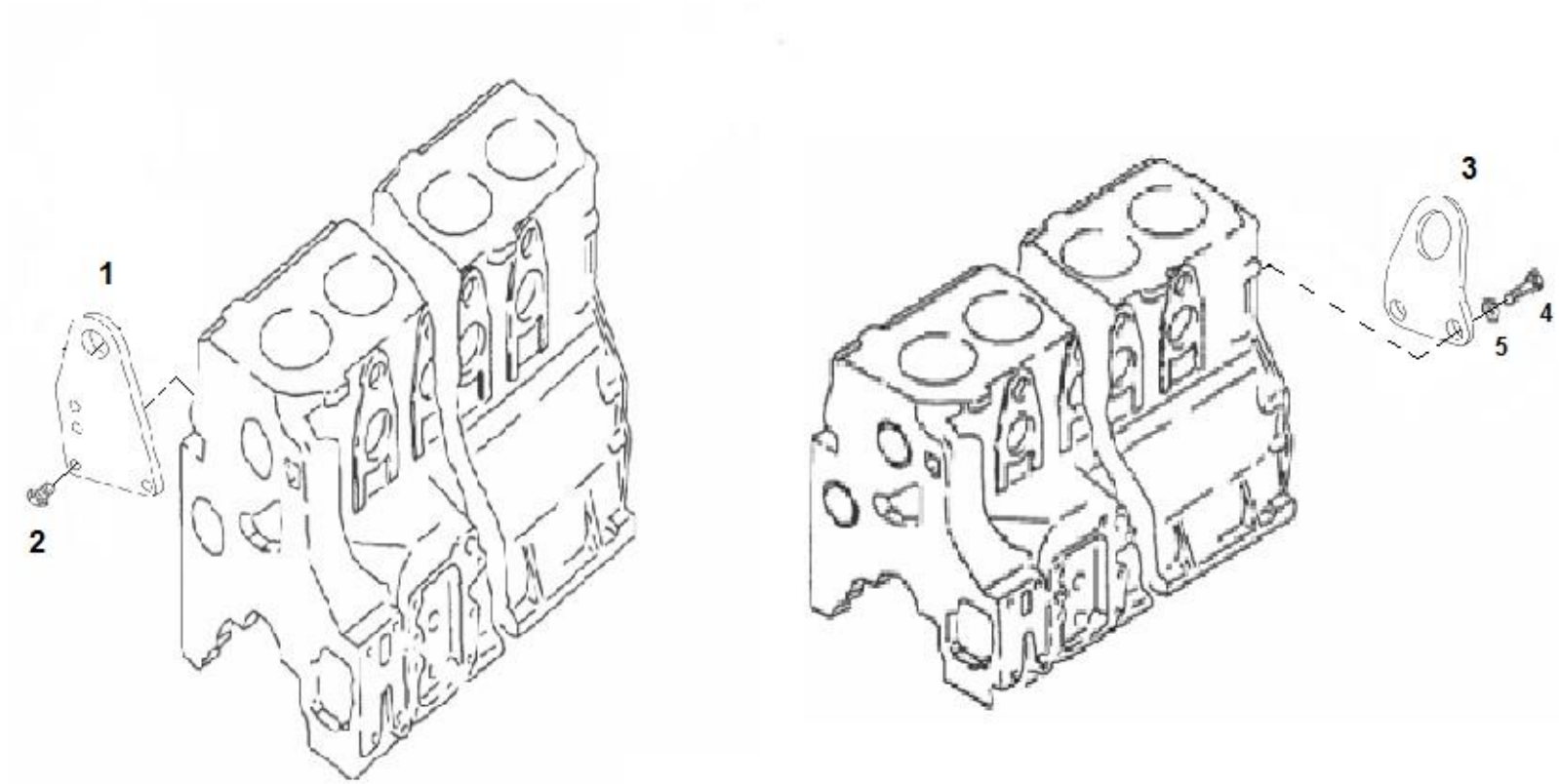

LIFTING EYE LATERAL FRONT

Diagram No.162

SR	PART NO.	DESCRIPTION	QTY	APPLICABLE MODEL	REMARKS
1	64.19202-0363	ASSY ENGINE LIFTING BKT FRONT	1		
2	06.01324-5415	HEX BOLT	2		
3	64.19210-0001	ENGINE LIFTING BKT FOR SAE1 F/W HOUSING	1		
4	64.90020-0125	SCREW M16X45 DIN:933-10.9 PHR	2		
5	64.90710-0030	PLAIN WASHER A17 DIN125-ST A3C	2		

DRIVE GENERATOR **Diagram No. 163**

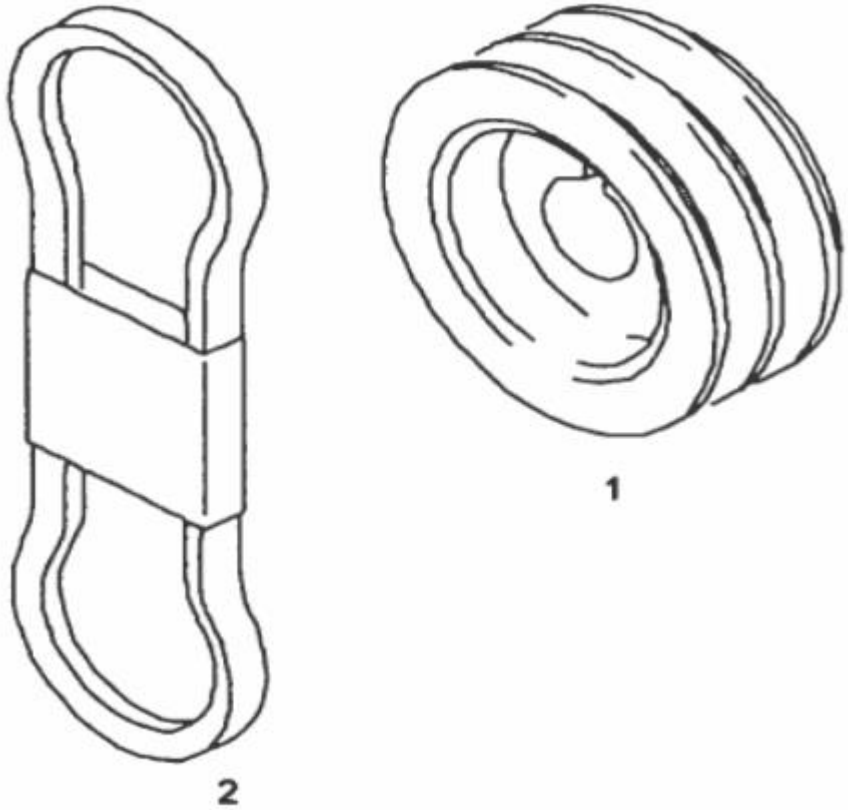

DRIVE GENERATOR

Diagram No. 163

SR	PART NO.	DESCRIPTION	QTY	APPLICABLE MODEL	REMARKS
1	51.02601-0595	V-BELT PULLEY FOR P T O	1		FOR AC MODELS ONLY. SUPERCEDED BY 64.02601-0595
2	06.58073-2331	BELT C-13X1290,MAN 316	1		AC BELT
Page No. 167		**REVISION NO. 001**			**VERSION: 001**

STARTER WITH MOUNTING PARTS

Diagram No. 164

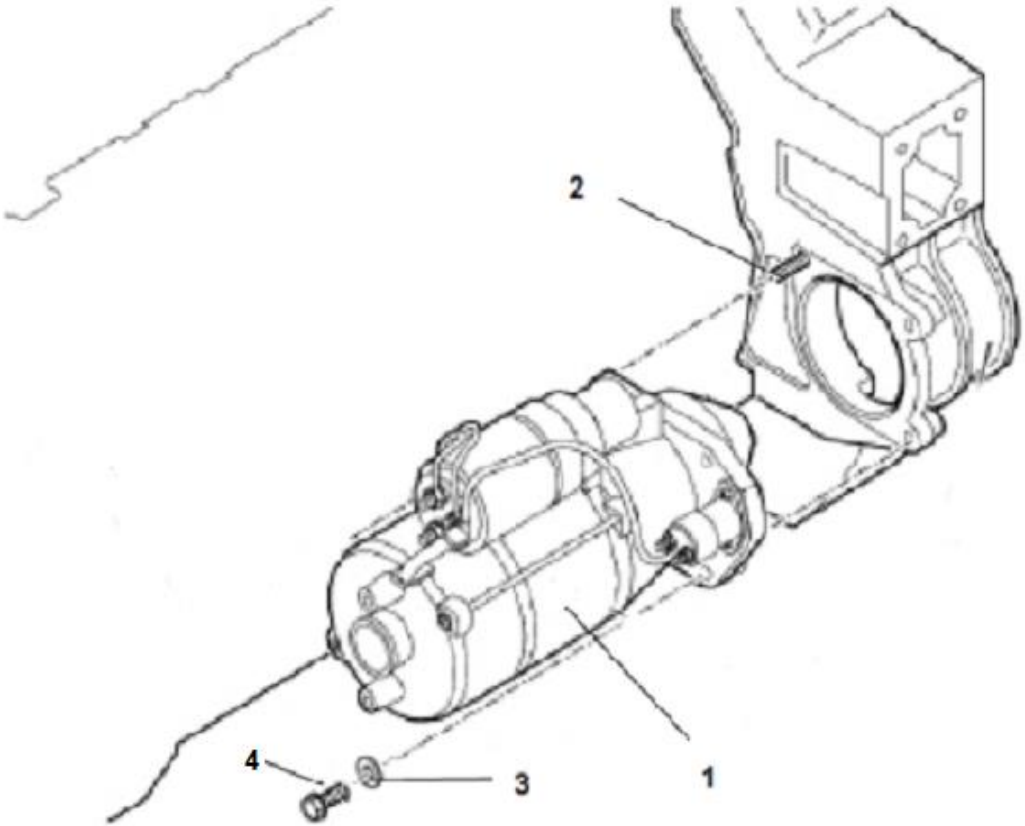

STARTER WITH MOUNTING PARTS

Diagram No. 164

SR	PART NO.	DESCRIPTION	QTY	APPLICABLE MODEL	REMARKS
1	51.26201-7263	STARTER MOTOR (24V-4KW-11TEETH)	1		51.26201-7236 ALTERNATE
2	64.90201-0009	STUD M10X28 -8.8 ZNPHR3F DIN 835	1		
3	64.90710-0027	PL WASHER A10.5 DIN125-ST BTS170202.12	3		
4	64.90020-0161	HEX SCREW M10X35-8.8 MAN183 PHR DIN 933	2		06.01283-7218 ALTERNATE

ENGINE SENSORS

Diagram No. 165

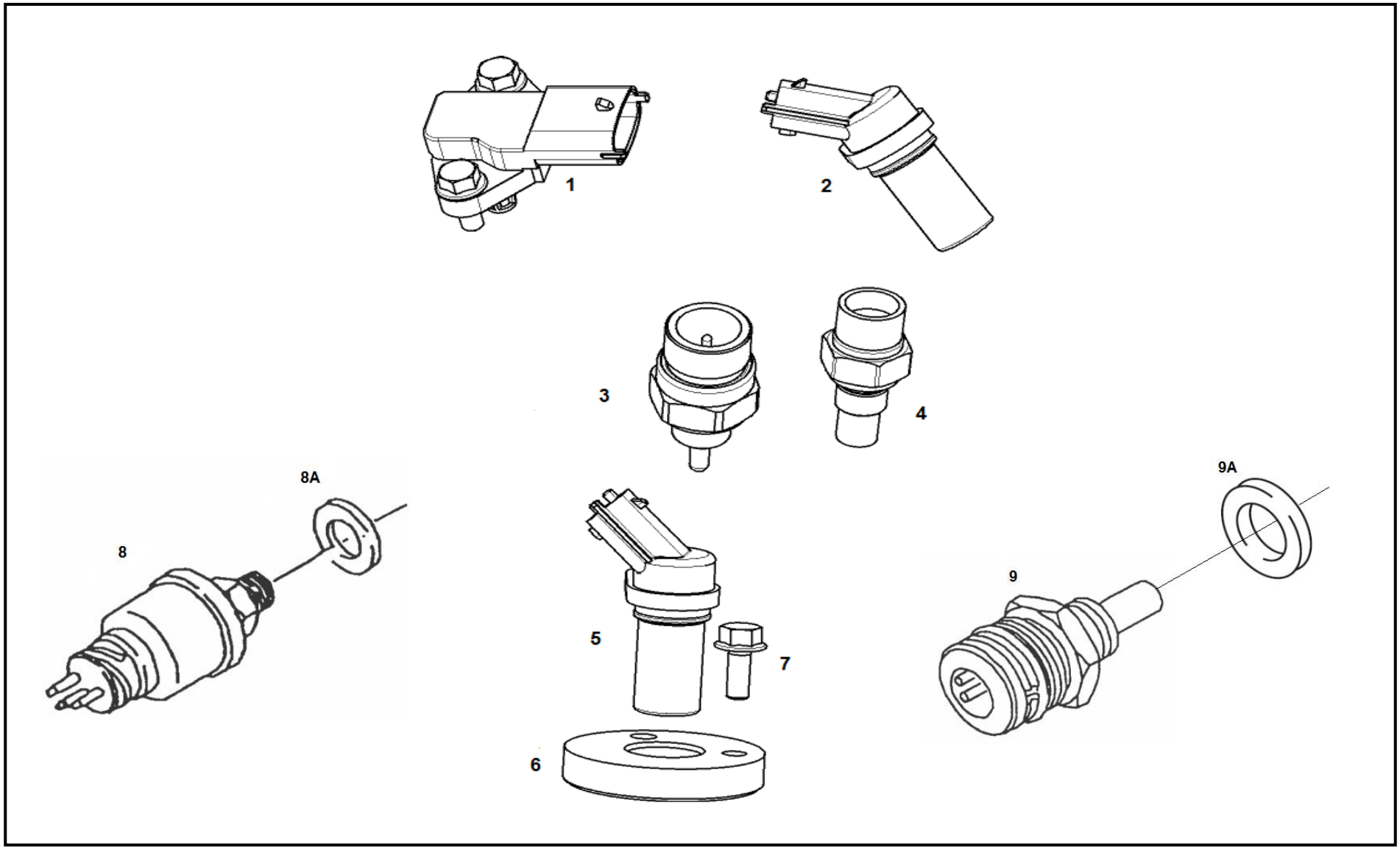

ENGINE SENSORS

Diagram No. 165

S R	PART NO.	DESCRIPTION	QTY	APPLICABLE MODEL	REMARKS
1	51.27421-0216	PRESSURE SENSOR	1		
2	51.27120-7038	CAM SHAFT PHASE SENSOR	1		
3	64.27430-0001	OIL PRESSURE SWITCH	1		
3	06.56631-0109	SEALING RING	1		
3	51.05520-0049	CONNECTION FOR OIL PRESSURE SENSOR	1		NOT SHOWN IN DIAGRAM
4	51.27421-0151	TEMP SENSER 106C+3K BEI-15K/MIN	1		
4	06.56631-0106	SEALING RING	1		
5	51.27120-7038	CAM SHAFT PHASE SENSOR	1		
6	64.90750-0027	SPACER FOR RPM SENSOR (SAE2)	1		
7	64.90020-0243	HEX HEAD BOLT M6X30 DIN933-8.8 A3C	1		
8	64.27430-0001	OIL PRESSURE SWITCH	1		51.27430-0007 ALTERNATE
8A	06.56631-0109	SEALING RING BS18.7X26.0-ST /FPM 1-80	1		64.96501-0049 ALTERNATE
9	51.27421-0190	COOLANT TEMPERATURE SENSOR	1		
9A	06.56631-0107	SEALING RING BS-16,7X24,0-ST FPM1-80	1		